SCAG
POWER EQUIPMENT

# OPERATOR'S MANUAL



TURF Tiger II™

**Models:**

**STTII-52V-25CH-LP-EFI**
**STTII-52V-31BV**
**STTII-61V-25CH-LP-EFI**
**STTII-61V-25KBD**
**STTII-61V-31BV**
**STTII-61V-31DFI**
**STTII-61V-35BV**
**STTII-61V-37BV-EFI**
**STTII-72V-25KBD**
**STTII-72V-31DFI**
**STTII-72V-37BV-EFI**

Congratulations on owning a Scag mower! This manual contains the operating instructions and safety information for your Scag mower. Reading this manual can provide you with assistance in maintenance and adjustment procedures to keep your mower performing to maximum efficiency. The specific models that this book covers are listed on the inside cover. Before operating your machine, please read all the information enclosed.

© 2020
Scag Power Equipment
Division of Metalcraft of Mayville, Inc.

PART NO. 03458
PRINTED 5/2020
PRINTED IN USA

# WARNING

FAILURE TO FOLLOW SAFE OPERATING PRACTICES MAY RESULT IN SERIOUS INJURY OR DEATH.

- Read this manual completely as well as other manuals that came with your mower.
- DO NOT operate on steep slopes. To check a slope, attempt to back up it (with the cutter deck down). If the machine can back up the slope without the wheels slipping, reduce speed and use extreme caution.
- Under no circumstances should the machine be operated on slopes greater than 15 degrees. ALWAYS FOLLOW OSHA APPROVED OPERATION.
- Stay two cut widths away from slopes, drop offs, ditches and retaining walls.
- DO NOT mow on wet grass. Wet grass reduces traction and steering control.
- Keep all shields in place, especially the grass discharge chute.
- Before performing any maintenance or service, stop the machine and remove the spark plug wire and ignition key.
- If a mechanism becomes clogged, stop the engine before cleaning.
- Keep hands, feet and clothing away from power-driven parts.
- Keep others off the mower (only one person at a time)

REMEMBER - YOUR MOWER IS ONLY AS SAFE AS THE OPERATOR!

HAZARD CONTROL AND ACCIDENT PREVENTION ARE DEPENDENT UPON THE AWARENESS, CONCERN, PRUDENCE, AND PROPER TRAINING OF THE PERSONNEL INVOLVED IN THE OPERATION, TRANSPORT, MAINTENANCE, AND STORAGE OF THE EQUIPMENT.

| This manual covers the operating instructions and illustrated parts list for: | | |
|---|---|---|
| STTII-52V-25CH-LP-EFI | with a serial number of | R0300001 to R0399999 |
| STTII-52V-31BV | with a serial number of | R2400001 to R2499999 |
| STTII-61V-25CH-LP-EFI | with a serial number of | R0500001 to R0599999 |
| STTII-61V-25KBD | with a serial number of | R0600001 to R0699999 |
| STTII-61V-31BV | with a serial number of | R2500001 to R2599999 |
| STTII-61V-31DFI | with a serial number of | R0800001 to R0899999 |
| STTII-61V-35BV | with a serial number of | R0900001 to R0999999 |
| STTII-61V-37BV-EFI | with a serial number of | R1000001 to R1099999 |
| STTII-72V-25KBD | with a serial number of | R1100001 to R1199999 |
| STTII-72V-31DFI | with a serial number of | R1200001 to R1299999 |
| STTII-72V-37BV-EFI | with a serial number of | R1400001 to R1499999 |
| Always use the entire serial number listed on the serial number tag when referring to this product. | | |

# Table of Contents

SECTION 1 - GENERAL INFORMATION ..... 1
1.1 INTRODUCTION ..... 1
1.2 DIRECTION REFERENCE ..... 1
1.3 SERVICING THE ENGINE AND DRIVE TRAIN COMPONENTS ..... 1
1.4 SYMBOLS ..... 2

SECTION 2 - SAFETY INFORMATION ..... 3
2.1 INTRODUCTION ..... 3
2.2 SIGNAL WORDS ..... 3
2.3 BEFORE OPERATION CONSIDERATIONS ..... 3
2.4 TESTING THE SAFETY INTERLOCK SYSTEM ..... 4
2.5 OPERATION CONSIDERATIONS ..... 5
2.6 ROLL-OVER PROTECTION SYSTEM ..... 6
2.7 MAINTENANCE CONSIDERATIONS & STORAGE ..... 9
2.8 USING A SPARK ARRESTOR ..... 9
2.9 SPARK IGNITION SYSTEM ..... 9
2.10 SAFETY AND INSTRUCTIONAL DECALS ..... 10

SECTION 3 - SPECIFICATIONS ..... 11
3.1 ENGINE ..... 11
3.2 ELECTRICAL ..... 12
3.3 POWER HEAD ..... 12
3.4 CUTTER DECK ..... 13
3.5 HYDRAULIC SYSTEM ..... 13
3.6 WEIGHTS AND DIMENSIONS ..... 13
3.7 PRODUCTIVITY ..... 13

SECTION 4 - OPERATING INSTRUCTIONS ..... 14
4.1 TIGER EYE INSTRUMENT IDENTIFICATION ..... 14
4.2 CONTROLS IDENTIFICATION ..... 16
4.3 SAFETY INTERLOCK SYSTEM ..... 17
4.4 TESTING THE SAFETY INTERLOCK SYSTEM ..... 17
4.5 INITIAL RUN-IN PROCEDURES ..... 18
4.6 STARTING THE ENGINE ..... 18
4.7 GROUND TRAVEL AND STEERING ..... 18
4.8 ENGAGING THE DECK DRIVE (CUTTER BLADES) ..... 19
4.9 HILLSIDE OPERATION ..... 20
4.10 PARKING THE MOWER ..... 20
4.11 AFTER OPERATION ..... 20
4.12 REMOVING CLOGGED MATERIAL ..... 20
4.13 MOVING MOWER WITH ENGINE STOPPED ..... 21
4.14 RECOMMENDATIONS FOR MOWING ..... 21
4.15 ADJUSTING CUTTING HEIGHT ..... 21

4.16 ADJUSTING THE STEERING LEVERS ..... 22
4.17 ADJUSTING THE HEIGHT ADJUST PEDAL ..... 22
4.18 TOWING (OPTIONAL HITCH ACCESSORY) ..... 23

SECTION 5 - TROUBLESHOOTING CUTTING CONDITIONS ..... 24

SECTION 6 - ADJUSTMENTS ..... 27
6.1 TRAVEL ADJUSTMENTS ..... 28
6.2 THROTTLE CONTROL AND CHOKE ADJUSTMENTS ..... 29
6.3 BELT ADJUSTMENT ..... 29
6.4 BELT ALIGNMENT ..... 30
6.5 CUTTER DECK ADJUSTMENTS ..... 30
6.6 CUSTOM-CUT BAFFLE ADJUSTMENT ..... 32
6.7 ELECTRIC CLUTCH ADJUSTMENT ..... 33

SECTION 7 - MAINTENANCE ..... 34
7.1 MAINTENANCE CHART - RECOMMENDED SERVICE INTERVALS ..... 34
7.2 LUBRICATION ..... 35
7.3 HYDRAULIC SYSTEM ..... 37
7.4 ENGINE OIL ..... 38
7.5 ENGINE FUEL SYSTEM (GASOLINE & DIESEL MODELS) ..... 38
7.6 LPG ENGINE FUEL SYSTEM ..... 40
7.7 ENGINE AIR CLEANER ..... 40
7.8 BATTERY ..... 41
7.9 DRIVE BELTS ..... 41
7.10 CUTTER BLADES ..... 42
7.11 TIRES ..... 43
7.12 CUTTER DECK GEARBOX ..... 44
7.13 COOLING SYSTEM ..... 44
7.14 BODY, DECK, AND UPHOLSTERY ..... 45

SECTION 8 - ILLUSTRATED PARTS LIST ..... 46
8.1 SCAG APPROVED ATTACHMENTS AND ACCESSORIES ..... 46
STTII 52V CUTTER DECK ..... 48
STTII 61V & 72V CUTTER DECKS ..... 50
STTII CUTTER DECK CONTROLS ..... 52
STTII SHEET METAL COMPONENTS ..... 54
STTII ROLL-OVER PROTECTION SYSTEM ..... 56
STTII SUSPENSION SEAT ..... 58
STTII DECK DRIVE COMPONENTS ..... 60
STTII ENGINE AND ATTACHING PARTS - AIR COOLED ( GASOLINE) ..... 62
STTII ENGINE & ATTACHING PARTS - LIQUID COOLED (GASOLINE) ..... 64
STTII ENGINE & ATTACHING PARTS - KOHLER 25CH-LP-EFI ..... 66
STTII ENGINE & ATTACHING PARTS - KUBOTA DIESEL ..... 68
STTII BRAKE COMPONENTS ..... 70

STTII STEERING COMPONENTS ..... 72
STTII HYDRAULIC SYSTEM - DUAL CORE COOLER ..... 74
STTII HYDRAULIC SYSTEM - SINGLE CORE COOLER ..... 76
STTII FUEL SYSTEM - GASOLINE ENGINES ..... 78
STTII FUEL SYSTEM - KOHLER 25CH-LP-EFI ..... 80
STTII FUEL SYSTEM - KUBOTA DIESEL ..... 82
BDP-16A HYDRAULIC PUMP ASSEMBLY WITH COOLING FAN ..... 84
STTII ELECTRICAL SYSTEM - GASOLINE & LP ENGINES ..... 86
STTII ELECTRICAL SYSTEM - KUBOTA DIESEL ..... 88
REPLACEMENT DECALS AND INFORMATION PLATES ..... 90
ELECTRICAL SCHEMATIC - KOHLER EFI (LP) ..... 92
ELECTRICAL SCHEMATIC - KUBOTA 25KBD ..... 93
ELECTRICAL SCHEMATIC - KAWASAKI 31DFI ..... 94
ELECTRICAL SCHEMATIC - BRIGGS & STRATTON 31BV & 35BV ..... 95
ELECTRICAL SCHEMATIC - BRIGGS & STRATTON 37BV-EFI ..... 96

LIMITED WARRANTY - COMMERCIAL EQUIPMENT ..... INSIDE BACK COVER

NOTES

# GENERAL INFORMATION

## 1.1 INTRODUCTION

Your mower was built to the highest standards in the industry. However, the prolonged life and maximum efficiency of your mower depends on you following the operating, maintenance and adjustment instructions in this manual.

If additional information or service is needed, contact your Scag Power Equipment Dealer.

We encourage you to contact your dealer for repairs. All Scag dealers are informed of the latest methods to service this equipment and provide prompt and efficient service in the field or at their service shop. They carry a full line of Scag service parts.

- IMPORTANT -

The replacement of any part on this product by other than the manufacturer's authorized replacement part may adversely affect the performance, durability or safety of this product.

Use of other than original Scag replacement parts will void the warranty.

When ordering parts, always give the model and serial number of your mower. The serial number plate is located between the seat and the controls where shown in Figure 1-1.

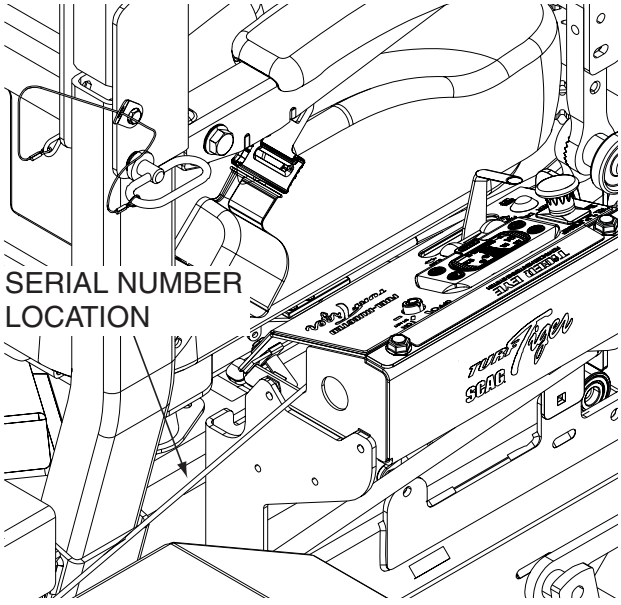


Figure 1-1. Mower Serial Number Plate Location

USE ONLY SCAG APPROVED ATTACHMENTS AND ACCESSORIES.

Attachments and accessories manufactured by companies other than Scag Power Equipment are not approved for use on this machine. See Section 8-1.

**⚠ WARNING**

For pictorial clarity, some illustrations and figures in this manual may show shields, guards or plates open or removed. Under no circumstances should your mower be operated without these devices in place.

All information is based upon product information available at the time of approval for printing. Scag Power Equipment reserves the right to make changes at any time without notice and without incurring any obligation.

## 1.2 DIRECTION REFERENCE

The “Right” and “Left”, “Front” and “Rear” of the machine are referenced from the operator’s right and left when seated in the normal operating position and facing the forward travel direction.

## 1.3 SERVICING THE ENGINE AND DRIVE TRAIN COMPONENTS

The detail servicing and repair of the engine, hydraulic pumps and gearboxes are not covered in this manual; only routine maintenance and general service instructions are provided. For service of these components during the limited warranty period, it is important to contact your Scag dealer or find a local authorized servicing agent of the component manufacturer. Any unauthorized work done on these components during the warranty period may void your warranty.

## 1.4 SYMBOLS

| SYMBOL | DESCRIPTION | SYMBOL | DESCRIPTION |
|---|---|---|---|
| 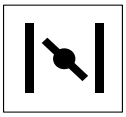 | Choke | 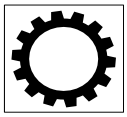 | Transmission |
|  | Parking Brake |  | Spinning Blade |
| 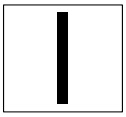 | On/Start |  | Spring Tension on Idler |
| 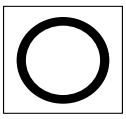 | Off/Stop |  | Oil |
|  | Falling Hazard |  | Thrown Object Hazard |
|  | Fast | 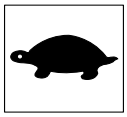 | Slow |
| 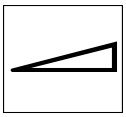 | Continuously Variable - Linear | 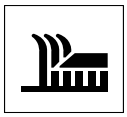 | Cutting Element - Basic Symbol |
|  | Pinch Point | 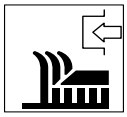 | Cutting Element - Engage |
| 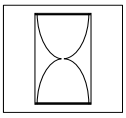 | Hour meter/Elapsed Operating Hours | 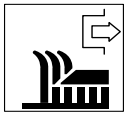 | Cutting Element - Disengage |
| 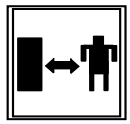 | Keep Bystanders Away | 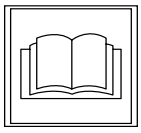 | Read Operator's Manual |

# SAFETY INFORMATION

## 2.1 INTRODUCTION

Your mower is only as safe as the operator. Carelessness or operator error may result in serious bodily injury or death. Hazard control and accident prevention are dependent upon the awareness, concern, prudence, and proper training of the personnel involved in the operation, transport, maintenance and storage of the equipment. Make sure every operator is properly trained and thoroughly familiar with all of the controls before operating the mower. The owner/user can prevent and is responsible for accidents or injuries occurring to themselves, other people or property.

READ THIS OPERATOR'S MANUAL BEFORE ATTEMPTING TO START YOUR MOWER.

A replacement manual is available from your authorized Scag Service Dealer or by contacting Scag Power Equipment, Service Department at P.O. Box 152, Mayville, WI 53050 or contact us via the Internet at www.scag.com. The manual for this machine can be downloaded by using the model and serial number or use the contact form to make your request. Please indicate the complete model and serial number of your Scag product when requesting replacement manuals.

## 2.2 SIGNAL WORDS



This symbol means "Attention! Become Alert! Your Safety is Involved!" The symbol is used with the following signal words to attract your attention to safety messages found on the decals on the machine and throughout this manual. The message that follows the symbol contains important information about safety. To avoid injury and possible death, carefully read the message! Be sure to fully understand the causes of possible injury or death.

SIGNAL WORD:

It is a distinctive word found on the safety decals on the machine and throughout this manual that alerts the viewer to the existence and relative degree of the hazard.

**⚠ DANGER**

The signal word "DANGER" denotes that an extremely hazardous situation exists on or near the machine that could result in high probability of death or irreparable injury if proper precautions are not taken.

**⚠ WARNING**

The signal word "WARNING" denotes that a hazard exists on or near the machine that can result in injury or death if proper precautions are not taken.

**⚠ CAUTION**

The signal word "CAUTION" is a reminder of safety practices on or near the machine that could result in personal injury if proper precautions are not taken.

Your safety and the safety of others depends significantly upon your knowledge and understanding of all correct operating practices and procedures of this machine.

## 2.3 BEFORE OPERATION CONSIDERATIONS

**⚠ WARNING**

Check all hydraulic connections for tightness. Inspect all hydraulic hoses and / or lines to insure they are in good condition before operating.

1. NEVER allow children to operate this riding mower. Do not allow adults to operate this machine without proper instructions.
2. Do not mow when children and/or others are present. Keep children out of the mowing area and in the watchful care of a responsible adult other than the operator. Be alert and turn machine off if a child enters the area.

3. DO NOT allow children to ride or play on the machine, it is not a toy.
4. Clear the area to be mowed of objects that could be picked up and thrown by the cutter blades.
5. DO NOT carry passengers.
6. DO NOT operate the machine under the influence of alcohol or drugs.
7. If the operator(s) or mechanic(s) cannot read English, it is the owner's responsibility to explain this material to them.
8. DO NOT wear loose fitting clothing. Loose clothing, jewelry or long hair could get tangled in moving parts. Do not operate the machine wearing shorts; always wear adequate protective clothing including long pants. Wearing safety glasses, safety shoes and a helmet is advisable and is required by some local ordinances and insurance regulations.

**⚠ WARNING**

Always wear hearing protection. Operating this machine over prolonged periods of time can cause loss of hearing.

9. Keep the machine and attachments in good operating condition. Keep all shields and safety devices in place. If a shield, safety device or decal is defective or damaged, repair or replace it before operating the machine.
10. Fuel is flammable; handle it with care. Fill the fuel tank outdoors. Never fill it indoors. Use a funnel or spout to prevent spillage. Clean up any spillage before starting the engine.
11. DO NOT add fuel to a running or hot engine. Allow the engine to cool for several minutes before adding fuel. Never fuel indoors or inside enclosed trailers.
12. Keep flammable objects (cigarettes, matches, etc.), open flames and sparks away from the fuel tank and fuel container. Use only approved containers.
13. See Section 7.5 ENGINE FUEL SYSTEM for fueling procedure.
14. Equipment must comply with the latest requirements per SAE J137 and/or ANSI/ASAE S279 when driven on public roads.

- NOTE -

If the mower is driven on public roads, it must comply with state and local ordinances as well as SAE J137 and/or ANSI / ASAE S279 requirements. Contact your local authorities for regulations and equipment requirements.

15. Do not operate without the side discharge chute installed and in the down position or with an optional grass catcher or mulch plate completely installed.
16. Check the blade mounting bolts at frequent intervals for proper tightness.
17. Make sure all hydraulic fluid connections are tight and all hydraulic hoses and lines are in good condition before starting the machine.

**⚠ WARNING**

This machine is equipped with an interlock system intended to protect the operator and others from injury. This is accomplished by preventing the engine from starting unless the deck drive is disengaged, the parking brake is on, the steering control levers are in the neutral position and the operator is in the seat. The system shuts off the engine if the operator leaves the seat with the deck drive engaged and/or the steering control levers are not in the neutral position and the parking brake is not engaged. Never operate equipment with the interlock system disconnected or malfunctioning.

18. Be sure the interlock switches are functioning correctly.

## 2.4 TESTING THE SAFETY INTERLOCK SYSTEM

The safety interlock system should be tested each time before using the machine. If the safety interlock system does not operate as described below, contact your local Authorized Scag Power Equipment Dealer immediately to have the safety interlock system repaired.

1. Sit in the seat in the operating position, engage the parking brake, place the steering control levers in the neutral lock position, and engage the PTO switch to the ON (up) position. Try to start the engine; the engine should not start.

2. Sit in the seat in the operating position, engage the parking brake, move either of the steering control handles out of the neutral lock position, move the PTO switch to the OFF (down) position. Try to start the engine; the engine should not start. Repeat for the other steering control lever.
3. Sit in the seat in the operating position, disengage the parking brake, place the steering control levers in the neutral lock position, move the PTO switch to the OFF (down) position. Try to start the engine; the engine should not start.
4. Sit in the seat in the operating position, engage the parking brake, place the steering control levers in the neutral lock position, move the PTO switch to the OFF (down) position, and start the engine. With the engine running, release the parking brake and rise slightly off of the seat. The engine should shut off.
5. Sit in the seat in the operating position, engage the parking brake, place the steering control levers in the neutral lock position, move the PTO switch to the OFF (down) position, and start the engine. With the engine running, engage the PTO switch to the ON (up) position, and rise slightly off of the seat. The engine should shut off.
6. Sit in the seat in the operating position, engage the parking brake, place the steering control levers in the neutral lock position, move the PTO switch to the OFF (down) position, and start the engine. With the engine running, move either steering control lever out of the neutral lock position. The engine should shut off. Repeat for the other steering control lever.

## 2.5 OPERATION CONSIDERATIONS

1. Know the function of all controls and how to stop quickly.

**⚠ WARNING**

DO NOT operate on steep slopes. To check a slope, attempt to back up it (with the cutter deck down). If the machine can back up the slope without the wheels slipping, reduce speed and use extreme caution. Under no circumstances should the machine be operated on slopes greater than 15 degrees. See Figure 2-4, Page 8 to determine approximate slope of area to be mowed. ALWAYS FOLLOW OSHA APPROVED OPERATION.

2. Reduce speed and exercise extreme caution on slopes and in sharp turns to prevent tipping or loss of control. Be especially cautious when changing directions on slopes.
3. Stay two cut widths away from slopes, drop offs, ditches and retaining walls.
4. To prevent tipping or loss of control, start and stop smoothly, avoid unnecessary turns and travel at reduced speed.
5. Immediately apply the parking brake if you lose steering control while operating. Inspect the machine and correct the problem before continuing to operate.
6. When using any attachment, never direct the discharge of material toward bystanders or allow anyone near the machine while in operation.
7. Before attempting to start the engine, with the operator in the seat, disengage power to the cutter deck, place the steering control levers in the neutral position and engage the parking brake.
8. If the mower discharge ever plugs, shut off the engine, remove the ignition key, and wait for all movement to stop before removing the obstruction.

**⚠ WARNING**

DO NOT use your hand to dislodge the clogged discharge chute. Use a stick or other device to remove clogged material after the engine has stopped running and the blades have stopped turning.

9. Be alert for holes, rocks, roots and other hidden hazards in the terrain. Keep away from any drop-offs. Beware of overhead obstructions (low limbs, etc.), underground obstacles (sprinklers, pipes, tree roots, etc.). Cautiously enter a new area. Be alert for hidden hazards.
10. Disengage power to cutter deck before backing up. Do not mow in reverse unless absolutely necessary and then only after observation of the entire area behind the mower. If you must mow in reverse, maintain a constant lookout to the rear of the machine and mow slowly.
11. DO NOT turn sharply. Use care when backing up.
12. Disengage power to cutter deck before crossing roads, walks or gravel drives.

13. Mow only in daylight or good artificial light.
14. NEVER raise the deck with the blades engaged.
15. Take all possible precautions when leaving the machine unattended, such as disengaging the mower, lowering the attachments, setting the parking brake, stopping the engine, and removing the key.
16. Disengage power to the attachments when transporting or when not in use.
17. The machine and attachments should be stopped and inspected for damage after striking a foreign object, and damage should be repaired before restarting and operating the machine.

**⚠ CAUTION**

Do not touch the engine or the muffler while the engine is running or immediately after stopping. These areas may be hot enough to cause a burn.

**⚠ DANGER**

DO NOT run the engine inside a building or a confined area without proper ventilation. Exhaust fumes are hazardous and contain carbon monoxide which can cause brain injury and death.

18. Keep hands and feet away from cutter blades and moving parts. Contact can injure.
19. Transport the mower using a heavy duty trailer or truck. Insure the trailer or truck has all of the necessary lighting and markings as required by laws, codes, and ordinances. Secure a trailer with a safety chain.
20. Be cautious when loading and unloading onto trailers or trucks. Use only a full width ramp. Ramp angle should be no more than 15 degrees. See Figure 2-4, Page 8 to determine approximate slope of the ramp. Back up the ramp and drive down forward.
21. When transporting the mower, make sure the park brake is engaged, the steering control levers are in the neutral position, the engine is off with the key removed, and the wheels have been blocked.
22. Tie the mower down securely using straps, chains, cable, or ropes. Both front and rear straps must be directed down and outward from machine.
23. Use care when approaching blind corners, shrubs, trees, or other objects that may obscure vision.
24. NEVER leave the machine running unattended.

## 2.6 ROLL-OVER PROTECTION SYSTEM

**⚠ WARNING**

Keep the roll bar in the raised and locked position and the seat belt securely fastened during operation. Failure to do so could cause serious injury or loss of life.

This mower has been designed for good traction and stability under normal mowing conditions. However, caution must be used when traveling on slopes, especially when the grass is wet. Do not mow on wet grass. Wet grass reduces traction and steering control.

Any or all parts of the Roll-Over Protection System MUST NOT be removed. Failure to adhere to this guideline could result in injury or death.

## ⚠ WARNING

There is no roll-over protection when the roll bar is in the down position.

Lower the roll bar only when absolutely necessary.

Raise the roll bar as soon as clearance permits.

DO NOT wear the seat belt when the roll bar is in the down position.

ALWAYS wear seat belt when roll bar is in the up position.

Operate the machine smoothly, no sudden turns, starts or stops.

Check the area carefully before mowing for proper overhead clearance (i.e. branches, doorways, etc.).

DO NOT contact any overhead object with the roll bar.

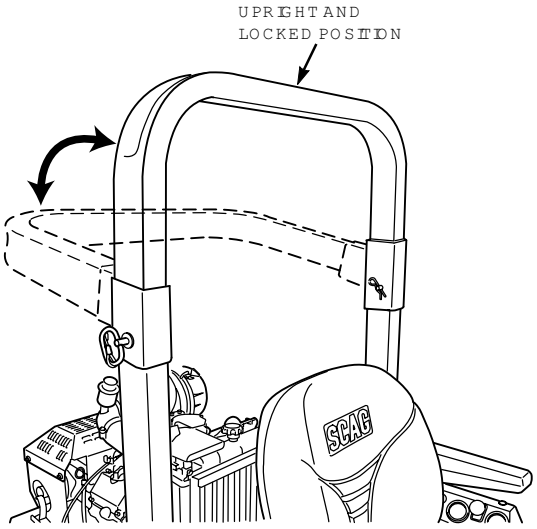


Figure 2-1. Foldable Roll-Over Protection System

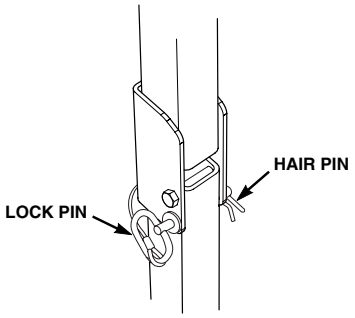


Figure 2-2. ROPS Hinge

Lower the roll bar only when absolutely necessary.

1. To lower the roll bar, remove the hairpin cotter pins and remove the two (2) lock pins. See Figure 2-2.
2. Lower the roll bar to the down position.
3. To raise the roll bar, lift the bar to the upright position.
4. Install the two (2) lock pins through the hole, secure with the two (2) hairpin cotter pins. See Figure 2-2.

The potential exposure of the seat belt to severe environmental conditions make it crucial to inspect the seat belt system regularly.

It is recommended that the seat belt be inspected on a daily basis for signs of damage. Any seat belt system that shows cuts, fraying, extreme or unusual wear, significant discoloration due to UV exposure, dirt or stiffness, abrasion to the seat belt webbing, or damage to the buckle, latch plate, hardware or any other obvious problem should be replaced immediately.

## ⚠ WARNING

Failure to properly inspect and maintain the seat belt can cause serious injury or loss of life.

1. Check the full length of the seat belt webbing for cuts, wear, fraying, dirt and stiffness. See Figure 2-3.

2. Check the seat belt webbing in areas exposed to ultra violet rays from the sun or extreme dust or dirt. If the original color of the webbing in these areas is extremely faded and/or is packed with dirt, the physical strength of this webbing may have deteriorated. If this condition exists, replace the seat belt system.

3. Check the buckle and latch for proper operation and determine if the latch plate is excessively worn, deformed, or if the buckle is damaged or cracked. See Figure 2-3.

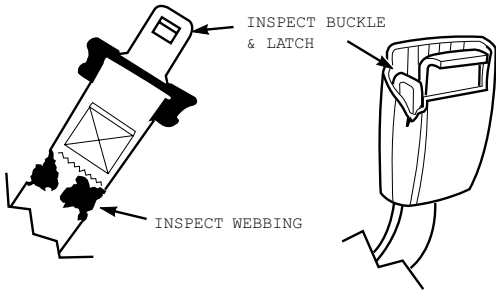


Figure 2-3. Seat Belt Inspection

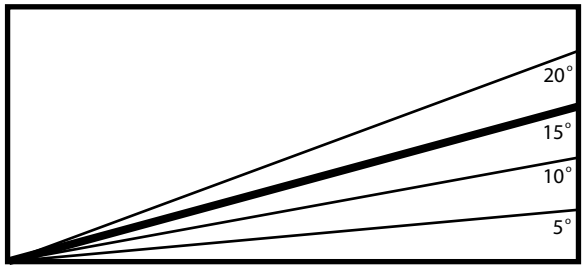


Figure 2-4. Slope Angle Graph

## ⚠ WARNING

Reduce speed when turning, operating on slopes, slick or wet surfaces. Allow extra distance to stop.

Stay off of slopes too steep for safe operation. To check a slope, attempt to back up it (with the cutter deck down). If the machine can not back up the slope without the wheels slipping, do not operate the machine on this slope. Under no circumstances should the machine be operated on slopes greater than 15 degrees. See Figure 2-4 to determine approximate slope.

DO NOT mow near drop-offs, ditches or embankments. The machine could suddenly roll over if a wheel goes over the edge or if the edge caves in.

Operate the machine smoothly, no sudden turns, starts or stops on a slope.

NEVER tow on slopes. The weight of the towed equipment may cause loss of traction and loss of control.

DO NOT permit untrained personnel to operate the machine.

Be cautious when loading and unloading onto trailers or trucks.

Use only a full width ramp.

Ramp angle should be no more than 15 Degrees. See Figure 2-4 to help determine approximate slope.

Back up the ramp and drive down forward.

## 2.7 MAINTENANCE CONSIDERATIONS & STORAGE

1. Never make adjustments to the machine with the engine running unless specifically instructed to do so. If the engine is running, keep hands, feet, and clothing away from moving parts.
2. Disengage drives, lower implement, set parking brake, stop engine and remove key or disconnect spark plug wire to prevent accidental starting of the engine when servicing or adjusting the machine. Wait for all movement to stop before adjusting, cleaning or repairing.
3. Disconnect battery or remove spark plug wire before making any repairs. Disconnect the negative terminal first and the positive last. Reconnect the positive first and the negative last.
4. Keep all nuts, bolts and screws tight, to insure the machine is in safe working condition. Check blade mounting bolts frequently to be sure they are tight.
5. Do not change the engine governor settings or overspeed the engine. See the engine operator's manual for information on engine settings.
6. To reduce fire hazard, keep the cutting units, drives, muffler and engine free of grass, leaves, excessive grease, oil and dirt.
7. Park the machine on level ground and engage the parking brake.
8. NEVER allow untrained personnel to service the machine.
9. Use care when checking blades. Use a Blade Buddy, wrap the blade(s) or wear gloves and USE CAUTION when servicing blades. Only replace blades. NEVER straighten or weld blades.
10. Keep all parts in good working condition. Replace all worn or damaged decals.
11. Use jack stands to support components when required.
12. Carefully release pressure from components with stored energy.

**⚠ WARNING**

Hydraulic fluid is under high pressure and can penetrate skin causing injury. If hydraulic fluid is injected into the skin, it must be surgically removed within a few hours by a doctor or gangrene may result.

Keep body and hands away from pinholes or nozzles that eject hydraulic fluid under high pressure. Use paper or cardboard and not hands to search for leaks.

Safely relieve all pressure from the hydraulic system by placing the control levers in the neutral lock position and shutting off the engine before performing any work on the hydraulic system.

If you need service on your hydraulic system, please see your authorized Scag dealer.

13. Let the engine cool before storing.
14. DO NOT store the machine near an open flame.
15. Shut off fuel while storing or transporting.
16. DO NOT store fuel near flames or drain indoors.
17. Charge batteries in an open, well ventilated area, away from spark and flames. Unplug charger before connecting or disconnecting from battery. Wear protective clothing and use insulated tools.

## 2.8 USING A SPARK ARRESTOR

The engine in this machine (excluding the 35BVAC) is not equipped with a spark arrestor muffler. It is in violation of California Public Resource Code Section 4442 to use or operate this engine on or near any forest covered, brush covered or grass covered land unless the exhaust system is equipped with a spark arrestor meeting any applicable local or state laws. Other states or federal areas may have similar laws. Check with your state or local authorities for regulations pertaining to these requirements.

## 2.9 SPARK IGNITION SYSTEM

This spark ignition system complies with Canadian ICES-002.

## 2.10 SAFETY AND INSTRUCTIONAL DECALS




483407




483402

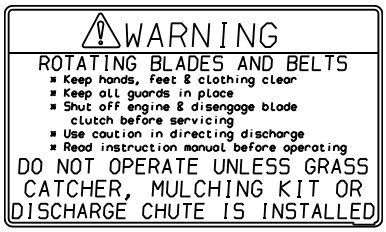


483406

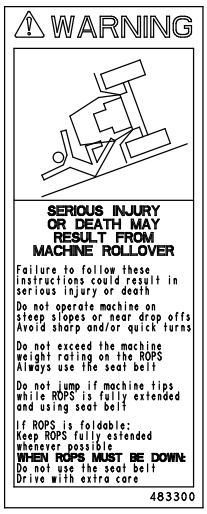


483300




481568

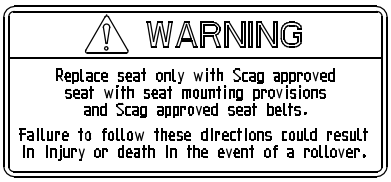


483633




486584

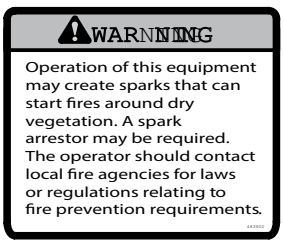


483900
(supplied with California models only)

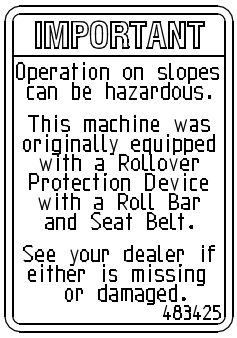


483425

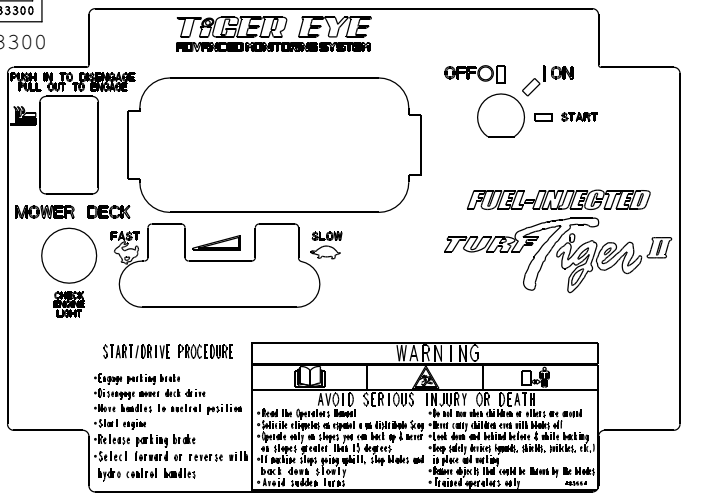


485664 / 485964 / 485

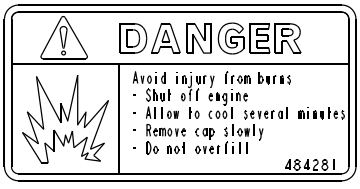


484281

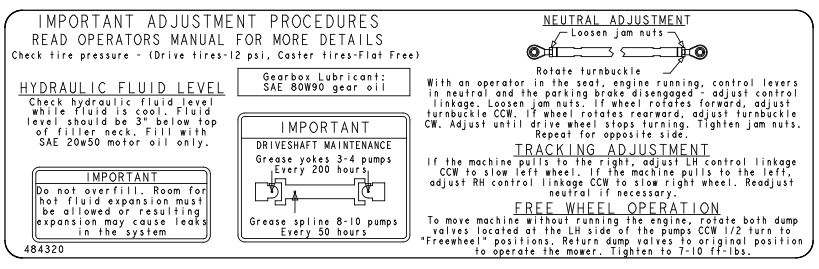


484320

390S0150J Rev.01

# SPECIFICATIONS

## 3.1 ENGINE

General Type ..... Heavy Duty Industrial/Commercial Gasoline or Diesel
Model:
- Scag Model STTII-52V-25CH-LP-EFI, STTII-61V-25CH-LP-EFI ..... Kohler Command PCH740
- Scag Model STTII-52V-31BV, STTII-61V-31BV ..... Briggs & Stratton Vanguard
- Scag Model STTII-61V-31DFI, STTII-72V-31DFI ..... Kawasaki FD851D
- Scag Model STTII-61V-35BV ..... Briggs & Stratton Vanguard
- Scag Model STTII-61V-37BV-EFI, STTII-72V-37BV-EFI ..... Briggs & Stratton Vanguard
- Scag Model STTII-61V-25KBD, STTII-72V-25KBD ..... Kubota D902

Displacement:
- Kohler 25CH-LP (PCH740) ..... 747cc
- Kawasaki 31DFI (FD851D) ..... 824cc
- Briggs & Stratton 31BV ..... 896cc
- Briggs & Stratton 35BV ..... 993cc
- Briggs & Stratton 37BV-EFI ..... 993cc
- Kubota 25KBD (D902) ..... 898cc

Type:
- Kohler (PCH740) ..... 4-Cycle, Air Cooled, Electronic Fuel Injection Liquid Propane, OHV
- Kawasaki (FD851D) ..... 4-Cycle, Liquid-Cooled, Digital Fuel Injection Gasoline, OHV
- Briggs & Stratton (31BV & 35BV) ..... 4-Cycle, Air-Cooled, Naturally Aspirated Gasoline, OHV
- Briggs & Stratton (37BV-EFI) ..... 4-Cycle, Air-Cooled, Electronic Fuel Injection Gasoline, OHV
- Kubota (D902) ..... 4 Stroke Diesel, 3 Cylinder, Horizontal Shaft, Liquid-Cooled

Cylinders ..... Varies
Governor - Gasoline Engines ..... Mechanical Type with Variable Speed Control Set At 3800 RPM
Governor - LP Engine ..... Mechanical Type with Variable Speed Control Set At 3800 RPM
Governor - Diesel Engine ..... Mechanical Type with Variable Speed Control Set At 3670 RPM -Kubota
Idle Speed:
- Kohler ..... 1400 RPM
- Kawasaki ..... 1400 RPM
- Briggs & Stratton ..... 1750 RPM
- Kubota ..... 1200 RPM

Carburation:
- Kohler (PCH740) ..... Electronic Fuel Injection
- Kawasaki (FD851D) ..... Digital Fuel Injection
- Briggs & Stratton (31BV & 35BV) ..... Fixed Jet Sidedraft Carburetor
- Briggs & Stratton (37BV-EFI) ..... Electronic Fuel Injection

Fuel Pump:
- Kohler (LP) ..... Vaporizer/Regulator
- Kawasaki ..... High Pressure Electric with In-Line Fuel Filter
- Briggs & Stratton (31BV & 35BV) ..... Mechanical with In-Line Fuel Filter
- Briggs & Stratton (37BV-EFI) ..... Electric with In-Line Fuel Filter
- Kubota ..... Injection Pump, Bosch MD Mini Type with In-Line Fuel Filter - Kubota

Fuel - Gasoline Engines ..... Non-Leaded Gasoline with a Minimum Octane Rating of 87
Fuel - LP Engine ..... Commercial Propane
Fuel - Diesel Engine ..... Diesel Fuel with a minimum Cetane rating of 40
Oil Pump - Gasoline & LP Engines ..... Full Pressure w/Full-Flow Filter
Oil Pump - Diesel Engine ..... Positive Displacement Gerotor™ Oil Pump with Oil Filter - Kubota
Starter ..... Electric Starting with Solenoid Shift
Belts ..... Kevlar cord, Self-adjusting, Self-tightening

## 3.2 ELECTRICAL

Battery ..... 12 Volt
Charging System ..... Alternator
Charging Output:
- Kohler (PCH740) ..... 12 Volt, 20 Amp
- Kawasaki (FD851D) ..... 12 Volt, 30 Amp
- Briggs & Stratton ..... 12 Volt, 20 Amp
- Kubota ..... 12 Volt, 40 Amp

System Polarity ..... Negative Ground
Interlock Switches ..... Seat, Neutral Control, Mower Engagement (PTO), Parking Brake
Instrument Panel ..... Tiger Eye Advanced Monitoring System, Key Switch, Throttle Lever, Manual Choke (Gasoline Non-EFI), PTO Switch, Fuses and Check Engine Indicator (31BV, 35BV, 37BV, FD851D)
Fuses ..... One (1) 20 Amp (25LP) or Two (2) 20 Amp (FD851D) or and One (1) 5 Amp or One (1) 20 Amp and One (1) 50 Amp Resettable (Kubota D902)

## 3.3 POWER HEAD

Drive System ..... Hydraulic Drive with Two Variable Displacement Pumps and Two Cast-Iron High Torque Motors
Hydrostatic Pumps ..... Two Hydro-Gear™ 16 cc/rev. Pumps with Dump Valves
Drive Wheel Motors: ..... Two Parker Model TG 18 cu. Inch Cast-Iron High-Torque Motors
Steering/Travel Control ..... Twin Lever Fingertip Steering Control with Individual Control to Each Wheel with Gas Spring Dampers
Parking Brake ..... Foot Pedal Actuated Linkage to Brakes on Both Drive Wheel Axles
Wheels:
- (2) Front Caster ..... 13 X 6.50 Four Ply, Flat Free
- (2) Drive - (52" Deck) ..... 26 X 9.50 X 12 Six-Ply Pneumatic Tubeless, Radius Edge
- (2) Drive - (61" & 72" Deck) ..... 26 x 12 x 12 Six-Ply Pneumatic Tubeless, Radius Edge

Tire Pressure:
- Front Caster ..... Flat Free
- Drive ..... 8 PSI

Fuel Tank ..... 12-Gallon Seamless Polyethylene Tank with Large Opening, Fuel Gauge and Fill Cap
Fuel Tank (LP) ..... 33.5# Industrial LP Tank
Seat ..... Padded Suspension Seat
Travel Speed ..... Varies - See Below
Forward ..... 0 up to 12 MPH (Gasoline & LP Powered Machines)
0 up to 10 MPH (Diesel Powered Machines)
Reverse ..... 0 up to 6 MPH (Gasoline & LP Powered Machines)
0 up to 6 MPH (Diesel Powered Machines)

-NOTE- The machine will travel up to maximum rated speed for transport purposes. For best cutting performance the forward travel speed should be adjusted depending upon the cutting conditions.

## 3.4 CUTTER DECK

Type ..... Floating, Adjustable, Anti-Scalping, Hybrid Design Combines Out-Front and Belly-Mount Designs
Construction ..... Tri-Plate deck construction
Top of deck consists of three steel plates totaling nearly 1/2" of steel., 7-gauge (3/16") deck skirt.
True Cutting Width:
52V ..... 52" (132.0 cm)
61V ..... 61" (155.0 cm)
72V ..... 71.5" (181.6 cm)
Cutting Height Adjustment ..... Foot-Operated Lever Adjustment from Operator's Seat, 1.0" to 6.0" in 1/4"increments
Cutter Blades ..... .197 or .250 Thick, Milled Edge, Wear Resistant
52V ..... Three (3) 18" blades
61V ..... Three (3) 21" blades
72V ..... Three (3) 24.5" blades
Blade Engagement ..... Electric Blade Engagement Clutch with Control Panel Switch
Connected to the Cutter Deck Gearbox through a Drive Shaft.
Discharge Opening ..... Extra-Wide Discharge Opening with Spring-Loaded Discharge Chute and Turbo Baffle
Discharge Chute ..... Black, Polypropylene (Plastic), Flexible
Spindles ..... Heavy-Duty 1-1/8" Top Dimension Spindle Shaft, Cast Housing, Taper Roller Bearing,
Low Maintenance with Top Access Grease Fitting and Grease Overfill Relief Poppet
Spindle Pulleys ..... Split Steel with Easily Removed Taper Hubs
Cutter Deck Belts ..... B-Section with Kevlar Cord, Self-Adjusting, Self-Tightening
Electric Clutch Type ..... Ogura Heavy Duty PTO Clutch Brake
Drive Shaft ..... Clamp Yoke Shaft With Two High-Speed U-Joints

## 3.5 HYDRAULIC SYSTEM

Hydraulic Oil Filter ..... 10 Micron Spin-on Element Type
Hydraulic Reservoir ..... Nylon; 3 Quart Capacity

## 3.6 WEIGHTS AND DIMENSIONS

| | 52V | 61V | 72V |
|---|---|---|---|
| Length | 80.5" | 85.5" | 89.5" |
| Tracking Width | 51" | 56" | 56" |
| Overall Width w/chute down | 64.5" | 73.5" | 83" |
| Overall Width w/chute up | 53.75" | 62.75" | 73.75" |
| Overall Height w/ROPS up | 68" | 68" | 68" |
| Overall Height w/ROPS down | 46.5" | 46.5" | 46.5" |
| Operating Weight (approx.) | 1420# | 1496# | 1556# |
| Operating Weight - 35BV or 37BV-EFI Engine | NA | 1519# | 1556# |
| Operating Weight - Kubota Diesel Engine | NA | 1728# | 1758# |

## 3.7 PRODUCTIVITY

| | 52V | 61V | 72V |
|---|---|---|---|
| Cutting Width | 52" | 61" | 72" |
| Acres Per Day | 20.2 | 23.7 | 28 |

The preceding chart will aid you in determining how many acres your Scag mower will cut per day. The chart is an estimate based on 8 hours per day cutting time at 6 MPH with a 20% allowance for overlap and turns.

# OPERATING INSTRUCTIONS

## ⚠ CAUTION

Do not attempt to operate this mower unless you have read this manual. Learn the location and purpose of all controls and instruments before you operate this mower.

Before operating the mower, familiarize yourself with all mower and engine controls. Knowing the location, function and operation of these controls is important for safe and efficient operation of the mower.

This machine is equipped with the Tiger Eye Advanced Monitoring System. With the key in the on position, before starting the engine, the lights for the Seat Indicator, PTO Indicator, Neutral Indicator and Park Brake Indicator should be illuminated. This indicates there is an operator in the seat, the PTO is off, steering levers are in neutral, and the parking brake is applied. When all the lights are illuminated, the key can be turned to the start position and the mower can be started. See Section 4.3 Safety Interlock System. If any of these indicator lights are not illuminated, the engine will be prevented from starting. If additional information or service is needed, contact your Scag Power Equipment Dealer.

## 4.1 TIGER EYE INSTRUMENT IDENTIFICATION

1. Service Air Filter Indicator (Figure 4-1). Optional Accessory. Indicates the condition of the engine air filter. Icon will display when it is time to change the air filter.
2. Glow Plug Indicator (Figure 4-1). Used on Diesel Powered Units Only. Indicator turns on when the key switch is turned to the ON position. Glow plug timer will cycle on for approximately 5 seconds as glow plugs preheat. At the end of the cycle, the indicator will turn off. Glow plugs must be preheated before starting the engine.
3. Oil Pressure Indicator (Figure 4-1). Used on Diesel Powered Units Only. Indicates engine oil pressure. Reference the engine operator's manual for further information.
4. Service Engine Indicator (Figure 4-1). Indicates the maintenance reminder for the engine oil change. Has preset maintenance reminder and will start flashing scheduled maintenance 2 hours before preset time and continue flashing until 2 hours after. Automatically resets.
5. Voltmeter Indicator (Figure 4-1). Indicates the condition of the charging system. When the engine is running, in normal operating conditions, the bar graph should be in the 12 to 14 volt range.
6. Seat Indicator (Figure 4-1). Light will illuminate when the operator is in the seat engaging the seat switch.
7. PTO Indicator (Figure 4-1). Light will illuminate when the PTO (mower deck) switch is in the OFF position.
8. Hourmeter Indicator (Figure 4-1). Indicates the number of hours the engine has been operated. It only operates when the engine is running. Will start flashing with the Service Engine Indicator at scheduled maintenance 2 hours before preset time and continue flashing until 2 hours after. Automatically resets.
9. Neutral Indicator (Figure 4-1). Light will illuminate when the steering control levers are in the neutral lock position.
10. Park Brake Indicator (Figure 4-1). Light will illuminate when the park brake is in the engaged (ON) position.
11. Water Temperature Indicator (Figure 4-1). Used on Liquid Cooled Models Only. Indicates the operating temperature of the engine. If the engine temperature exceeds the maximum preset value, the indicator will flash and the Park Brake, PTO, Seat and Neutral indicator lights will flash in an alternating pattern.
12. Fuse Holders (Figure 4-2). Two 20-amp fuses and one 5-amp fuse protect the mower's electrical system. To replace fuses, pull fuse out of the socket and install a new fuse.

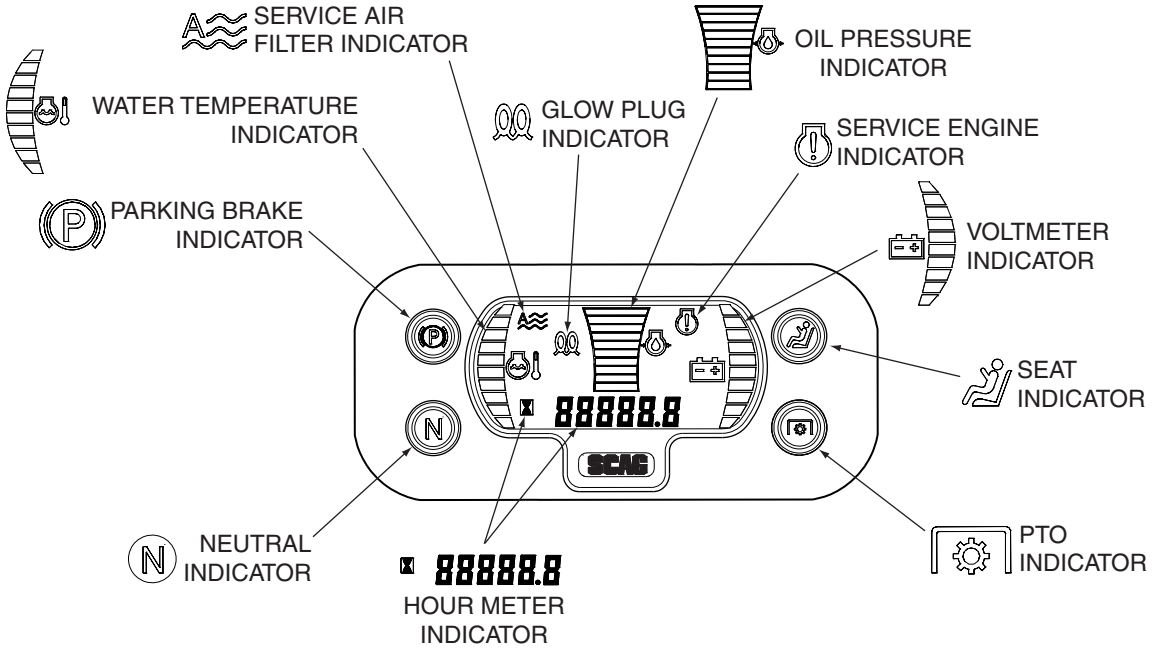


Figure 4-1. Tiger Eye Advanced Monitoring System

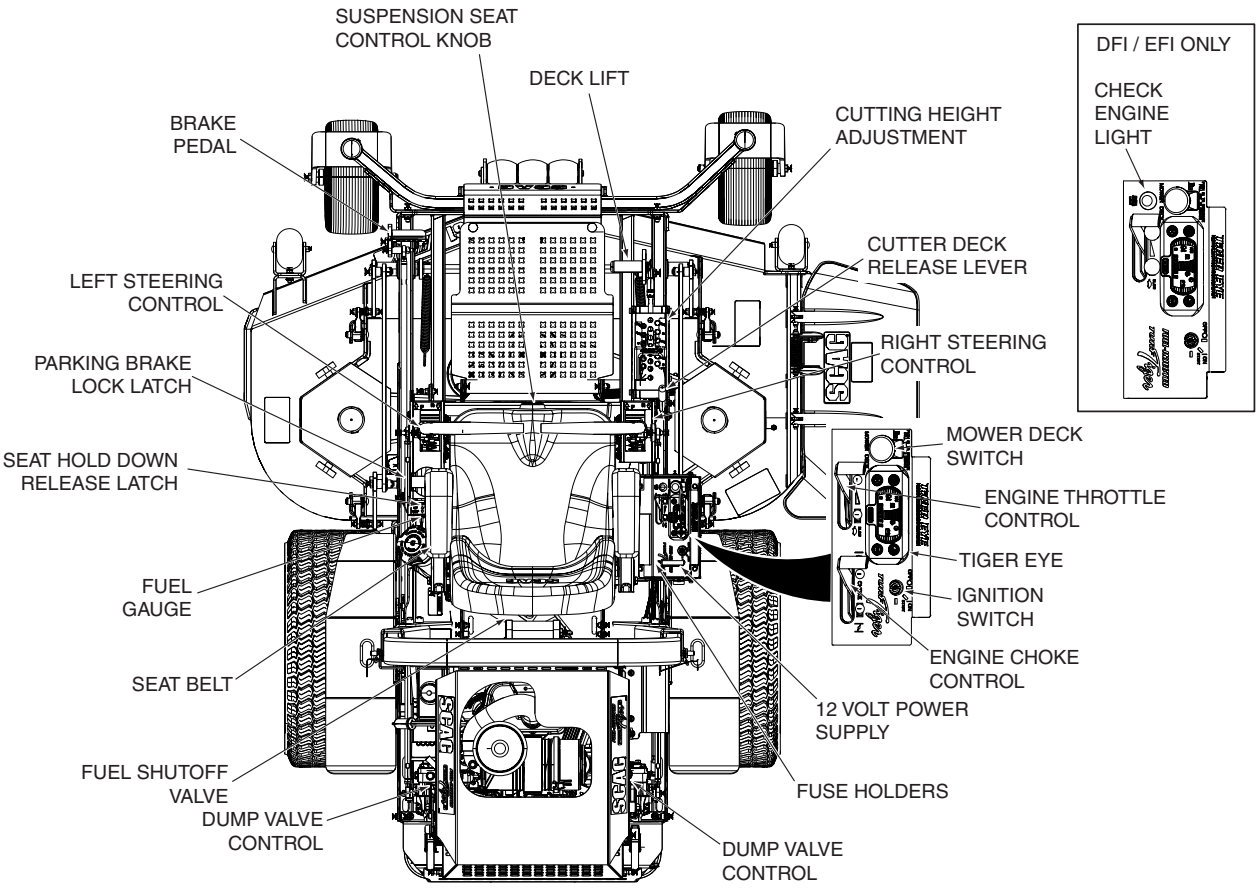


Figure 4-2. Controls and Instruments

## 4.2 CONTROLS IDENTIFICATION

1. Ignition Switch (Figure 4-2). The ignition switch is used to start the engine and has three positions; OFF, ON, and START.
2. Mower Deck Switch (Figure 4-2). Used to engage and disengage the mower drive system. Pulling up on the switch will engage the deck drive. Pushing down on the switch will disengage the deck drive.
3. Engine Choke Control, Carburated Engine Only (Figure 4-2). Used to start a cold engine.
4. Engine Throttle Control (Figure 4-2). Used to control the engine speed. Pushing the lever forward increases engine speed. Pulling the lever back decreases engine speed. Full back position is the IDLE position. Full forward is the cutting position.
5. Left Steering Control (Figure 4-2). Used to control the mower's left wheel when traveling forward or reverse.
6. Right Steering Control (Figure 4-2). Used to control the mower's right wheel when traveling forward or reverse.
7. Brake Pedal (Figure 4-2). Depressing the brake pedal applies the brake.
8. Parking Brake Lock Latch (Figure 4-2). Used to lock the parking brake in the engaged position. Fully depress the brake pedal and pull the parking brake lock latch back to lock the parking brake in the engaged position. See Figure 4-3. Fully depress the brake pedal forward to disengage the parking brake lock latch, then release the brake pedal to disengage the brake. See Figure 4-4.

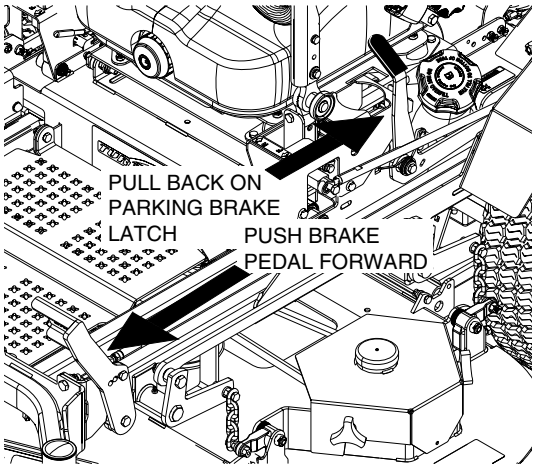


Figure 4-3. Engaging Parking Brake

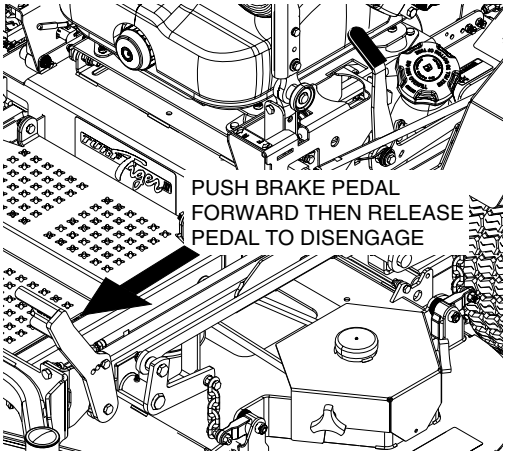


Figure 4-4. Releasing the Parking Brake

9. Fuel Tank Gauge, Gasoline & Diesel Models Only (Figure 4-2). Indicates the amount of fuel in the fuel tank.
10. Dump Valve Control Levers (Figure 4-2). Located on the left and right side of the machine, used to "free-wheel" the mower. Move the levers forward until they stop allows the unit to move under hydraulic power. Move the levers back and towards the engine allows the mower to be moved by hand (free-wheeling). See Figure 4-5.

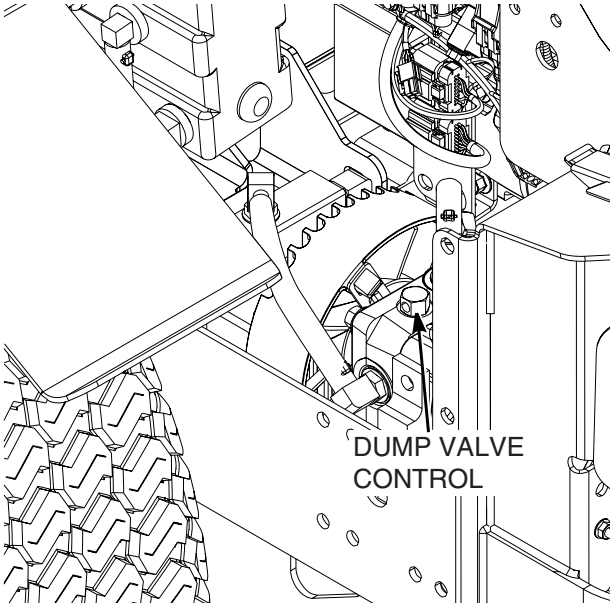


Figure 4-5. Dump Valve Control

11. Deck Lift Foot Lever (Figure 4-2). Used to raise and lower the cutter deck. Push full forward to lock in the transport position.
12. Cutting Height Adjustment (Figure 4-2). Used to set the cutter deck at the desired cutting height.

13. Deck Release Lever (Figure 4-2). Used to lock the cutter deck in the transport position. Push the foot pedal forward and pull back on the release lever to release the cutter deck for normal mowing.
14. Seat Suspension Control Knob (Figure 4-2). Used to select the optimum suspension rate based on the operator.
15. Seat Belt (Figure 4-2). Used to secure the operator. Seat belt must be worn at all times when the ROPS is in the upright and locked position.
16. Seat Hold Down Release Latch (Figure 4-2). Located behind the seat. Used to secure the seat in the operator's position. Release the latch to gain access under the seat.
17. Fuel Shutoff Valve Gasoline & Diesel Models (Figure 4-2). Located under the seat on top of the fuel tank. Used to shut off fuel supply to the engine. Rotate the valve counter clockwise to supply fuel from the tank to the engine. Rotate the valve clockwise to shut off the fuel supply to the engine. LP Models, Valve is located on the LP tank.
18. 12 Volt Power Supply (Figure 4-2). Located on the side of the control panel. Fused 12 volt DC power supply used to power accessories rated at 5 amps or less.

## 4.3 SAFETY INTERLOCK SYSTEM

The mower is equipped with a safety interlock system that prevents the engine from starting unless the deck drive is disengaged, the parking brake is engaged, the steering control levers are in the neutral position and the operator is in the seat. The interlock system shuts off the engine if the operator leaves the seat with the steering control levers not in the neutral position and/or the cutter blades engaged and the parking brake not engaged.

**⚠ WARNING**

Never operate the mower with the interlock system disconnected or malfunctioning. Do not disengage or bypass any switch; injury to yourself and others or property damage could result.

## 4.4 TESTING THE SAFETY INTERLOCK SYSTEM

The safety interlock system should be tested each time before using the machine. If the safety interlock system does not operate as described below, contact your local Authorized Scag Power Equipment Dealer immediately to have the safety interlock system repaired.

1. Sit in the seat in the operating position, engage the parking brake, place the steering control levers in the neutral lock position, and engage the PTO switch to the ON (up) position. Try to start the engine; the engine should not start.
2. Sit in the seat in the operating position, engage the parking brake, move either of the steering control handles out of the neutral lock position, move the PTO switch to the OFF (down) position. Try to start the engine; the engine should not start. Repeat for the other steering control lever.
3. Sit in the seat in the operating position, disengage the parking brake, place the steering control levers in the neutral lock position, move the PTO switch to the OFF (down) position. Try to start the engine; the engine should not start.
4. Sit in the seat in the operating position, engage the parking brake, place the steering control levers in the neutral lock position, move the PTO switch to the OFF (down) position, and start the engine. With the engine running, release the parking brake and rise slightly off of the seat. The engine should shut off.
5. Sit in the seat in the operating position, engage the parking brake, place the steering control levers in the neutral lock position, move the PTO switch to the OFF (down) position, and start the engine. With the engine running, engage the PTO switch to the ON (up) position, and rise slightly off of the seat. The engine should shut off.
6. Sit in the seat in the operating position, engage the parking brake, place the steering control levers in the neutral lock position, move the PTO switch to the OFF (down) position, and start the engine. With the engine running, move either steering control lever out of the neutral lock position. The engine should shut off. Repeat for the other steering control lever.

## 4.5 INITIAL RUN-IN PROCEDURES

FIRST DAY OF USE OR APPROXIMATELY 20 HOURS

1. Check all belts for proper alignment and wear at 2, 4 and 8 hours.
2. Change the engine oil and oil filter after the first 20 hours of operation. (See Section 7.4.)
3. Check hydraulic oil level in reservoir. (See Section 7.3.)
4. Check for loose hardware. Tighten as needed.
5. Check interlock system for proper operation. (See Section 4.3.)
6. Check tire pressure. Adjust pressure if necessary. (See Section 7.11.)

## 4.6 STARTING THE ENGINE

**⚠ CAUTION**

DO NOT USE STARTING FLUIDS. Use of starting fluids in the air intake system may be potentially explosive or cause a "runaway" engine condition that could result in engine damage and/or personal injury.

1. Be sure the fuel shutoff valve, located behind the operator's seat, (Gasoline & Diesel Models) is fully open. (See Section 7.5.). LP Powered Machines - Make sure the fuel valve is completely open on the LP tank.
2. Secure the ROPS in the upright and locked position.
3. Sit in the operator's seat, fasten seat belt and place the steering control levers in the neutral position.
4. Engage the parking brake.
5. Place the PTO switch in the disengaged position.
6. Move the engine throttle control to about half engine speed.
7. Gasoline Carburated Units Only - If the engine is cold, choke the engine as needed if equipped.
8. Diesel Powered Units Only - Turn the ignition key to the on position until the glow plug indicator located in the Tiger Eye display goes out.
9. Turn the ignition key to the START position and release the key as soon as the engine starts. Do not hold the key in the START position for more than 15 seconds at a time. Allow at least 60 seconds between each cranking attempt to prevent overheating of the starter motor. Prolonged cranking can damage the starter motor and shorten battery life.
10. Allow engine to warm before operating the mower.

## 4.7 GROUND TRAVEL AND STEERING

- IMPORTANT -

If you are not familiar with the operation of a machine with lever steering and/or hydrostatic transmissions, the steering and ground speed operations should be learned and practiced in an open area, away from buildings, fences, or obstructions.

Learn the operation on flat ground before operating on slopes.

Start practicing with a slow engine speed and slow forward travel.

Learn to feather the steering controls to obtain a smooth operating action.

Practice operating the mower until you are comfortable with the controls before proceeding to mow.

### FORWARD TRAVEL

To travel forward with the mower, disengage the parking brake, pull levers inward out of the neutral lock position and slowly push the steering control levers forward an equal distance. The further the steering control levers are pushed forward the greater the forward speed will be. To increase the speed, push the steering control levers further forward and to decrease the speed, pull the steering control levers back.

To stop the forward travel, pull the steering control levers back to the neutral position.

To steer the mower left while traveling forward, pull the left steering lever back. The further the lever is pulled back, the quicker the mower will turn left.

To steer the mower right while traveling forward, pull the right steering control lever back. The further the lever is pulled back, the quicker the mower will turn right.

- NOTE -

Smooth operation of the steering levers will produce smooth mower operation. While learning the operation of the steering controls, keep the travel speed low.

- IMPORTANT -

Do not travel forward over a curb. The mower will hang up on the curb. Raise the deck and travel backwards over the curb at a 45 degree angle. (See Section 4.2, items 11 - 13, on page 16 & 17 for cutter deck raising descriptions.)

REVERSE TRAVEL

**⚠ CAUTION**

Disengage power to the mower before backing up. Do not mow in reverse unless absolutely necessary and then only after observation of the entire area behind the mower.

**⚠ CAUTION**

Before backing up, observe the rear for persons and obstructions. Clear the area before backing up. Possible injury or property damage could occur.

To travel in reverse, pull levers inward out of the neutral lock position and pull both handles back. Keep the travel speed low while traveling in reverse.

- NOTE -

The mower may not travel straight in reverse. Slight adjustments may need to be made using the steering controls.

To steer left while traveling in reverse, allow the left steering control lever to move forward. The further the control is allowed to move forward, the quicker the mower will turn left.

To steer right while traveling in reverse, allow the right steering control lever to move forward. The further the control is allowed to move forward, the quicker the mower will turn right.

To stop the reverse travel, allow the steering control levers to return to the neutral position. If the mower is to be parked, place the handles in the neutral lock position and engage the parking brake.

## 4.8 ENGAGING THE DECK DRIVE (CUTTER BLADES)

1. Set the throttle at about 3/4 speed. Do not attempt to engage the deck drive at high speed as this shortens the electric clutch life — use only moderate engine speed when engaging the deck drive.
2. Engage the deck drive by pulling out on the yellow switch, located on the instrument panel, to the engage position. See Figure 4-6.

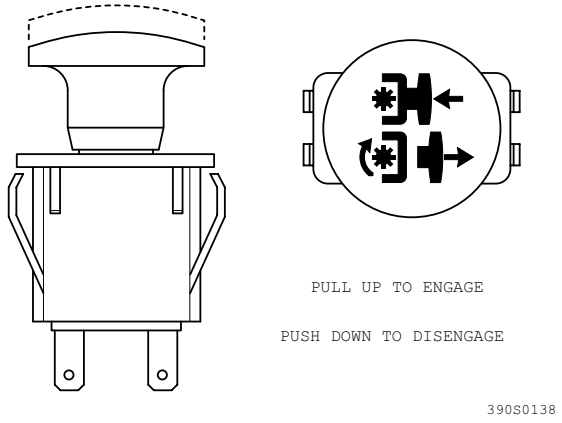


Figure 4-6. Cutter Engage Switch

- NOTE -

A squealing noise may be heard when engaging or disengaging the deck drive. It is caused by the electric clutch plates meshing as the mower comes up to speed. This is normal.

3. To disengage the deck drive, push the switch in to the disengage position.
4. Always operate the engine at full throttle to properly maintain cutting speed. If the engine starts to lug down, reduce the forward speed and allow the engine to operate at maximum RPM.

## 4.9 HILLSIDE OPERATION

**⚠ WARNING**

DO NOT operate on steep slopes. To check a slope, attempt to back up it (with the cutter deck down). If the machine can back up the slope without the wheels slipping, reduce speed and use extreme caution. Under no circumstances should the machine be operated on slopes greater than 15 degrees. See Figure 2-4, Page 8 to help determine approximate slope of area to be mowed. ALWAYS FOLLOW OSHA APPROVED OPERATION.

1. This mower has been designed for good traction and stability under normal mowing conditions. However, caution must be used when traveling on slopes, especially when the grass is wet. Wet grass reduces traction and steering control. The Roll-Over Protection System is standard equipment for this machine. See Section 2.6, page 6 of this manual for further details.
2. Stay two cut widths away from slopes, drop offs, ditches and retaining walls.
3. To prevent tipping or loss of control, do not start or stop suddenly, avoid unnecessary turns and travel at reduced speed. If tires lose traction, disengage blades and proceed slowly off the slope.
4. Avoid sudden starts when mowing uphill. Sudden starts may cause the machine to tip backwards.
5. Loss of traction may occur when traveling down hill. Weight transfers to the front of the machine and may cause the drive wheels to slip causing loss of braking or steering.
6. Keep tires properly inflated.

## 4.10 PARKING THE MOWER

1. Park the machine on a flat, level surface only. Do not park the machine on an incline.
2. Place the steering control levers in the neutral position.
3. Disengage the cutter blades.
4. Slow the engine to idle speed.
5. Engage the parking brake.
6. Turn the ignition key to the OFF position and remove the key.

## 4.11 AFTER OPERATION

1. Wash the entire mower after each use. Do not use high pressure spray or direct the spray onto electrical components.

   - IMPORTANT -

   Do not wash a hot or running engine. Cold water will damage the engine. Use compressed air to clean the engine if it is hot.

2. Keep the entire mower clean to inhibit serious heat damage to the engine or hydraulic oil circuit.
3. Check the drive belts for proper alignment and any signs of wear. Correct and adjust if necessary.

**⚠ DANGER**

To avoid injury from burns, allow the mower to cool before removing the fuel tank cap and refueling.

4. After the mower has cooled down, fill the fuel tank with fresh, clean fuel at the end of every day of operation. See Engine Owner's Manual for proper octane requirements.
5. Check the tire pressure. Adjust pressure if necessary.

## 4.12 REMOVING CLOGGED MATERIAL

**⚠ DANGER**

ROTATING BLADES

NEVER PUT YOUR HANDS INTO THE DISCHARGE CHUTE FOR ANY REASON!

Shut off the engine and remove the key and only then use a stick or similar object to remove material if clogging has occurred.

1. If the discharge chute becomes clogged, shut off the engine and remove the ignition key. Using a stick or similar item, dislodge the clogged material. Then resume normal mowing.

## 4.13 MOVING MOWER WITH ENGINE STOPPED

To "free-wheel" or move the mower around without the engine running, rotate the dump valve levers counter-clockwise. See Figure 4-7. Disengage the parking brake and move the mower by hand. When the machine is in the desired position, engage the parking brake and rotate the levers clockwise until they stop. The dump valve levers must be returned to the DRIVE position and torqued to 10 lb-ft to drive the mower.

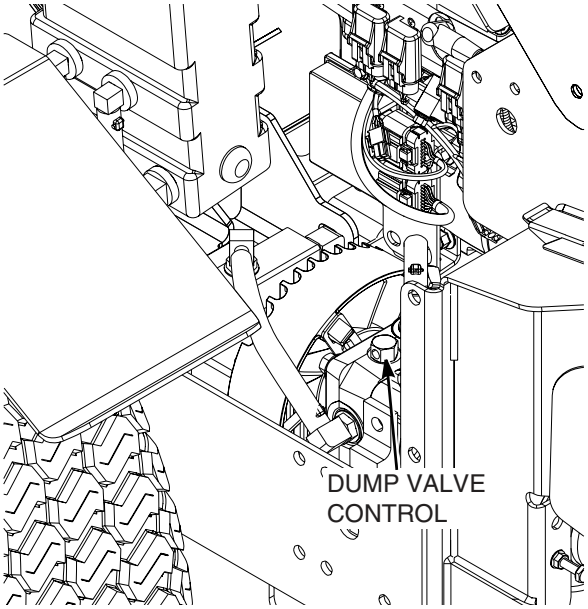


Figure 4-7. Dump Valve Control

## 4.14 RECOMMENDATIONS FOR MOWING

1. Do not mow with dull blades. A dull blade will tear grass, resulting in poor lawn appearance and reduced mowing power.

**⚠ WARNING**

DO NOT operate without Discharge Chute, Mulching Kit, or entire Grass Catcher properly installed.

2. The discharge chute must not be removed and must be kept in the lowest position to deflect grass clippings and thrown objects downward. Direct the side discharge away from sidewalks or streets to minimize cleanup of clippings. When mowing close to obstacles, direct the discharge away from the obstacles to reduce the chance of property damage by thrown objects.
3. Cut grass when it is dry and not too tall. Do not cut grass too short (cut off 1/3 or less of existing grass for best appearance). Mow frequently.
4. Keep mower and discharge chute clean.
5. When mowing wet or tall grass, mow the grass twice. Raise the mower to the highest setting for the first pass and then make a second pass to the desired height.
6. Use a slow travel speed for trimming purposes.
7. Operate the engine at full throttle for best cutting. Mowing with a lower RPM causes the mower to tear the grass. The engine is designed to be operated at full speed.
8. Use the alternate stripe pattern for best lawn appearance. Vary the direction of the stripe each time the grass is mowed to avoid wear patterns in the grass.

## 4.15 ADJUSTING CUTTING HEIGHT

The mower deck can be adjusted from a height of 1.0 inch to 6.0 inches at 1/4-inch intervals. To adjust the cutting height:

**⚠ WARNING**

DO NOT adjust the cutting height with the mower blades rotating. Disengage the power to the cutter blades and then adjust cutting height.

1. Disengage the power to the cutter blades.
2. Push the cutting height adjustment foot pedal all the way forward using your right foot until it locks in place. See Figure 4-8.

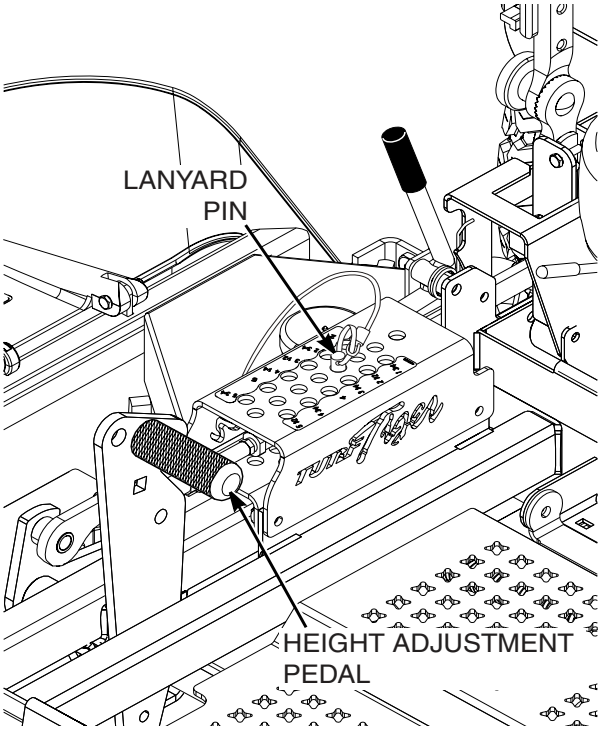


Figure 4-8. Adjusting Cutting Height

3. Insert the lanyard pin into the cutting height index at the desired cutting height. Push forward on the deck lift foot lever, hold in place and pull back on the deck release lever. See Figure 4-9. Slowly release the foot pedal. A deck height decal is located on the cutting height index as an aid in adjusting the deck to the desired height. See Figure 4-8.

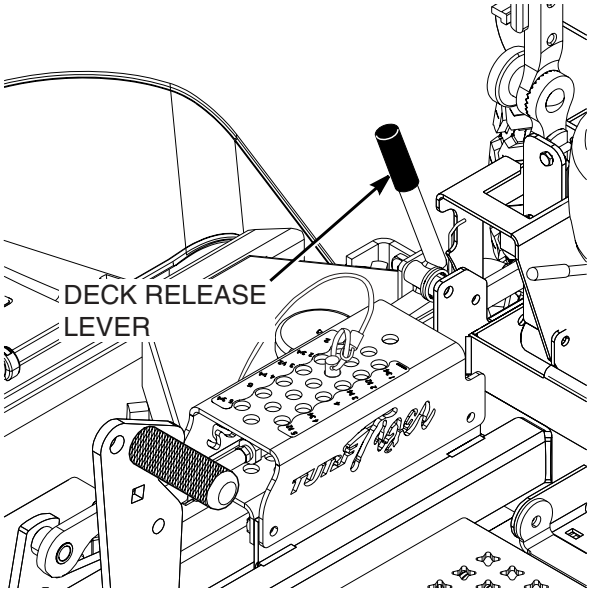


Figure 4-9. Deck Release Lever

## 4.16 ADJUSTING THE STEERING LEVERS

1. Position the seat to the desired location.
2. While in the operator's position without the engine running, move both steering levers forward and reverse to check for full function control and comfort.
3. If adjustment of the steering levers is needed, use the following instructions to adjust.

   A. Loosen the tension knob on the lever assembly.

   B. Rotate the steering lever forward or backward to achieve the optimum operating position.

   C. Tighten the tension knob and repeat on the opposite side.

   D. While in the operator's position, bring the steering levers out of the neutral lock position and check to make sure both levers are even before operating.

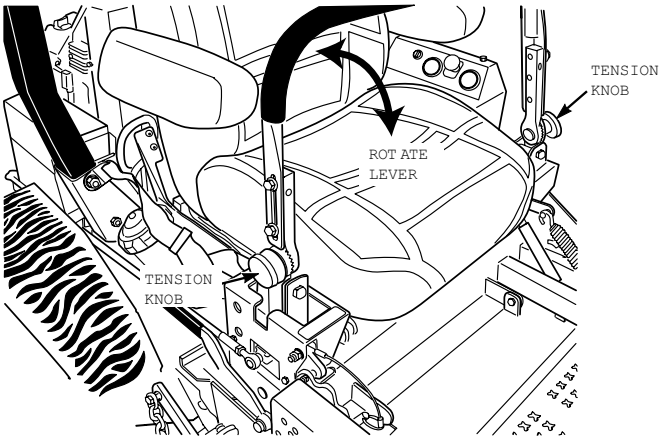


Figure 4-10. Adjusting Steering Levers

4. The control handle can also be adjusted in two different positions. If necessary, remove the two bolts securing the control handle to the control lever. Install the handle in the desired position.

## 4.17 ADJUSTING THE HEIGHT ADJUST PEDAL

1. Position the seat to the desired location.
2. While in the operator's position without the engine running, push down on the height adjust pedal to check for full function control.

3. The height adjust pedal can be located in three (3) different positions for operator comfort and control. See Figure 4-11.

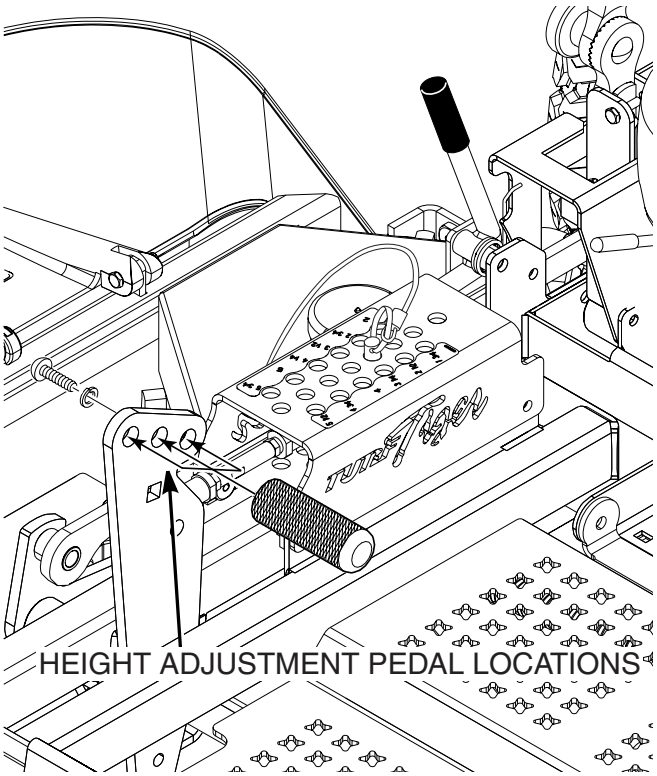


Figure 4-11. Height Adjust Pedal Locations

## 4.18 TOWING (OPTIONAL HITCH ACCESSORY)

1. NEVER allow children or others in or on towed equipment.
2. Tow only with a machine that has a hitch designed for towing. Do not attach towed equipment except at the hitch point.
3. Follow manufacturer's recommendations for weight limit for towed equipment. 250 lbs. maximum towing weight.
4. NEVER tow on slopes. The weight of the towed equipment may cause loss of traction and loss of control.
5. Travel slowly and allow extra distance to stop.
6. Zero-turning with a trailer attached could cause damage to the trailer or mower.

# TROUBLESHOOTING CUTTING CONDITIONS

| CONDITION | CAUSE | CURE |
|---|---|---|
| STRINGERS - OCCASIONAL BLADES OF UNCUT GRASS 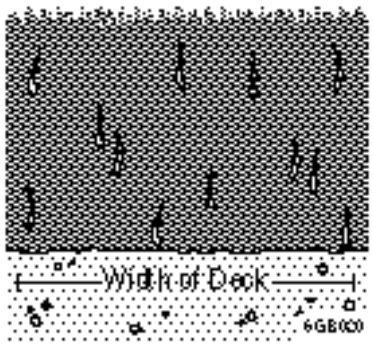  | Low engine RPM | Run engine at full RPM |
| | Ground speed too fast | Slow speed to adjust for conditions |
| | Wet grass | Cut grass after it has dried out |
| | Dull blades, incorrect sharpening | Sharpen blades |
| | Deck plugged, grass accumulation | Clean underside of deck |
| | Belts slipping | Adjust belt tension |
| STREAKING - STRIPS OF UNCUT GRASS IN CUTTING PATH 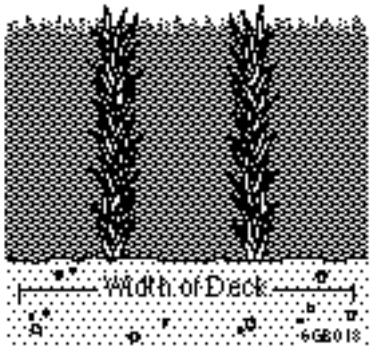  | Dull, worn blades | Sharpen blades |
| | Incorrect blade sharpening | Sharpen blades |
| | Low engine RPM | Run engine at full RPM |
| | Belt slipping | Adjust belt tension |
| | Deck plugged, grass accumulation | Clean underside of deck |
| | Ground speed too fast | Slow speed to adjust for conditions |
| | Wet grass | Cut grass after it has dried out |
| | Bent blades | Replace blades |
| STREAKING - STRIPS OF UNCUT GRASS BETWEEN CUTTING PATHS 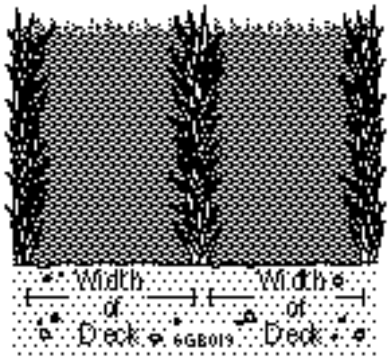  | Not enough overlapping between rows | Increase the overlap of each pass |

## TROUBLESHOOTING CUTTING CONDITIONS (CONT'D)

| CONDITION | CAUSE | CURE |
|---|---|---|
| UNEVEN CUT ON FLAT GROUND - WAVY HIGH-LOW APPEARANCE, SCALLOPED CUT, OR ROUGH CONTOUR 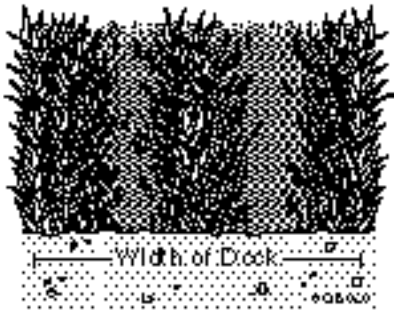  | Lift worn from blade | Replace blade |
| | Blade upside down | Mount with cutting edge toward ground |
| | Deck plugged, grass accumulation | Clean underside of deck |
| | Too much blade angle (deck pitch) | Adjust pitch and level |
| | Deck mounted improperly | See your authorized SCAG dealer |
| | Bent spindle area | See your authorized SCAG dealer |
| | Dull blade | Sharpen blade |
| UNEVEN CUT ON UNEVEN GROUND - WAVY APPEARANCE, HIGH-LOW SCALLOPED CUT, OR ROUGH CONTOUR   | Uneven ground | May need to reduce ground speed, raise cutting height, and/or change direction of cut |
| SLOPING RIDGE ACROSS WIDTH OF CUTTING PATH 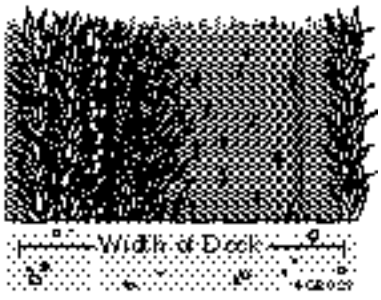  | Tire pressures not equal | Check and adjust tire pressure |
| | Wheels uneven | Check and adjust tire pressure |
| | Deck mounted incorrectly | See your authorized SCAG dealer |
| | Deck not level side-to side | Check for level and correct |

## TROUBLESHOOTING CUTTING CONDITIONS (CONT'D)

| CONDITION | CAUSE | CURE |
|---|---|---|
| SCALPING - BLADES HITTING DIRT OR CUTTING VERY CLOSE TO THE GROUND 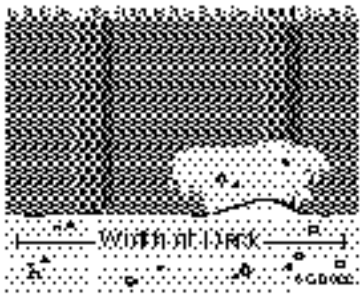  | Low tire pressures | Check and adjust pressures |
| | Ground speed too fast | Slow speed to adjust for conditions |
| | Cutting too low | May need to reduce ground speed, raise cutting height, change direction of cut, and/or change pitch and level |
| | Rough terrain | May need to reduce ground speed, raise cutting height, and/or change direction of cut |
| | Wet grass | Cut grass after it has dried out |
| STEP CUT - RIDGE IN CENTER OF CUTTING PATH   | Blades not mounted evenly | Adjust pitch and level |
| | Bent blade | Replace blade |
| | Internal spindle failure | See your authorized SCAG dealer |
| | Mounting of spindle incorrect | See your authorized SCAG dealer |
| SLOPE CUT - SLOPING RIDGES ACROSS WIDTH OF CUTTING PATH 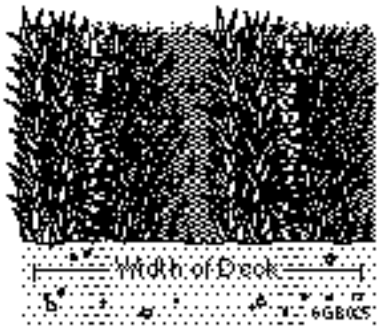  | Bent spindle mounting area | See your authorized SCAG dealer |
| | Internal spindle failure | See your authorized SCAG dealer |
| | Bent deck housing | See your authorized SCAG dealer |

# ADJUSTMENTS

## ⚠ WARNING

Do not operate the mower if the parking brake is not operable. Possible severe injury could result.

The parking brake linkage should be adjusted whenever the parking brake lock latch is placed in the "ENGAGE" position and the parking brake will not prevent the mower from moving. If the following procedures do not allow you to engage the parking brake properly, contact your Scag dealer for further brake adjustments.

1. Park the machine on a flat surface and block the caster wheels to prevent the machine from moving. Remove the ignition key.
2. Engage the parking brake. Fully depress the brake pedal and pull the parking brake lock latch back to lock the parking brake. See Figure 6-1.
3. Loosen the jam nut at the front of the brake linkage. See Figure 6-2.
4. With the parking brake in the locked position, turn the adjustment nut until the brake spring has an overall length of 2". See Figure 6-2.
5. Repeat steps 3 and 4 on the other side of the machine.
6. Test the parking brake.

- NOTE -

If this procedure does not achieve proper brake adjustment, please contact your authorized Scag dealer.

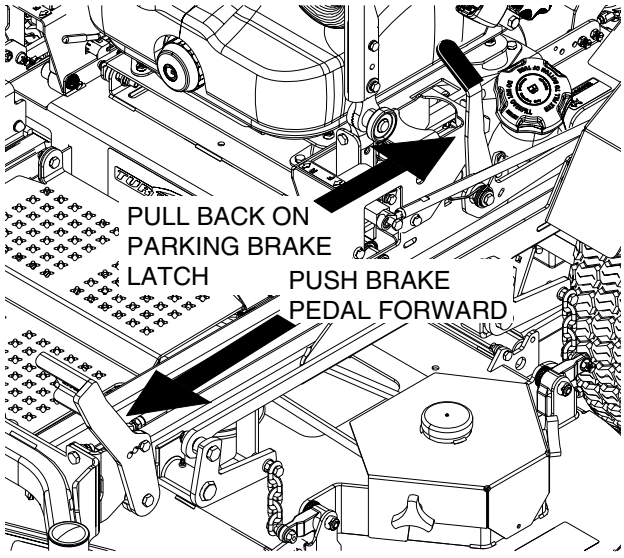


Figure 6-1. Brake Adjustment

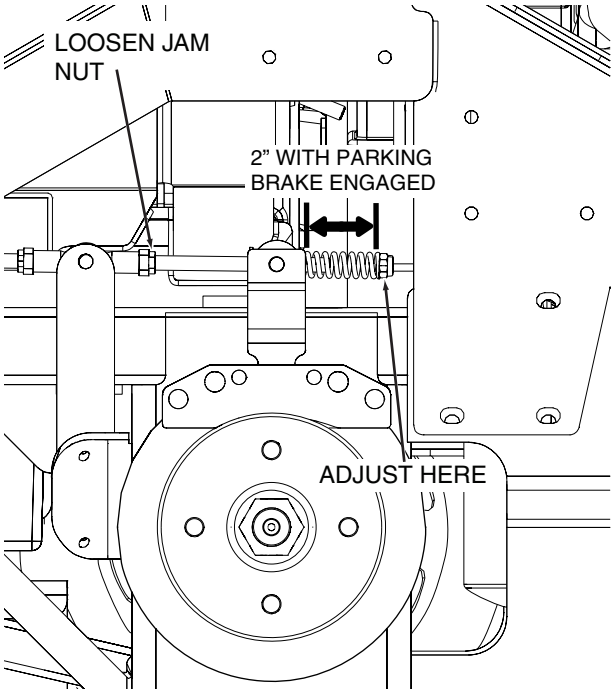


Figure 6-2. Brake Rod Adjustment

## 6.1 TRAVEL ADJUSTMENTS

Neutral or tracking adjustments will need to be made if:

A. The steering control levers are in the neutral position and the machine creeps forward or backward. See Neutral Adjustment (next procedure).

B. The steering control levers are in the full forward position and the mower pulls to one side or the other when traveling in a forward direction. See Tracking Adjustment on page 29.

### NEUTRAL ADJUSTMENT

1. Be sure the dump valve levers are in the run position and the steering control levers are in the neutral lock position.
2. With an operator in the seat, start the engine and disengage the parking brake.
3. Run the engine at full operating speed and check if the machine creeps forward or backwards.
4. Adjust the RH wheel by loosening the jam nuts on the steering control rod and turning the rod until the drive wheel turns in the forward direction. Turn the rod back until the drive wheel stops moving. Turn the rod an additional 1/2 turn. See Figure 6-3.

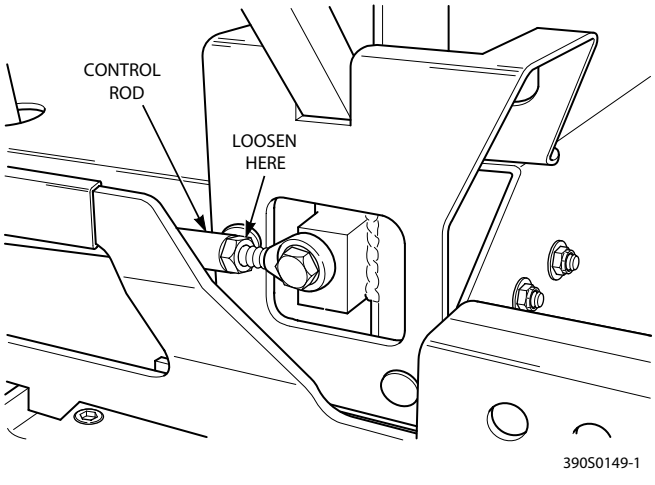


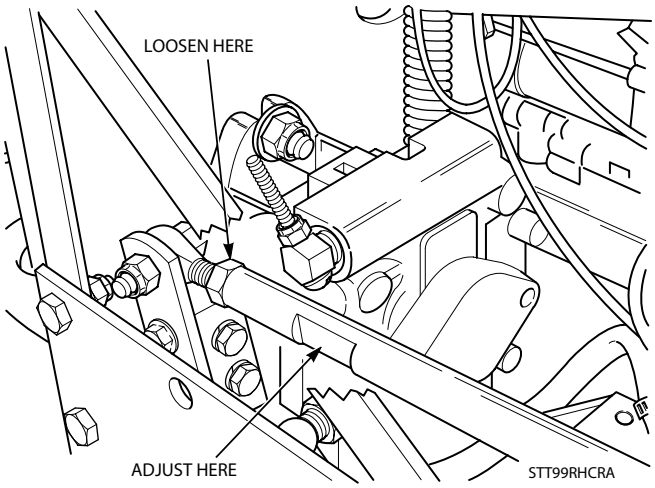


Figure 6-3. RH Steering Control Rod Adjustment

5. Tighten the jam nuts and repeat for the LH wheel. See Figure 6-4.

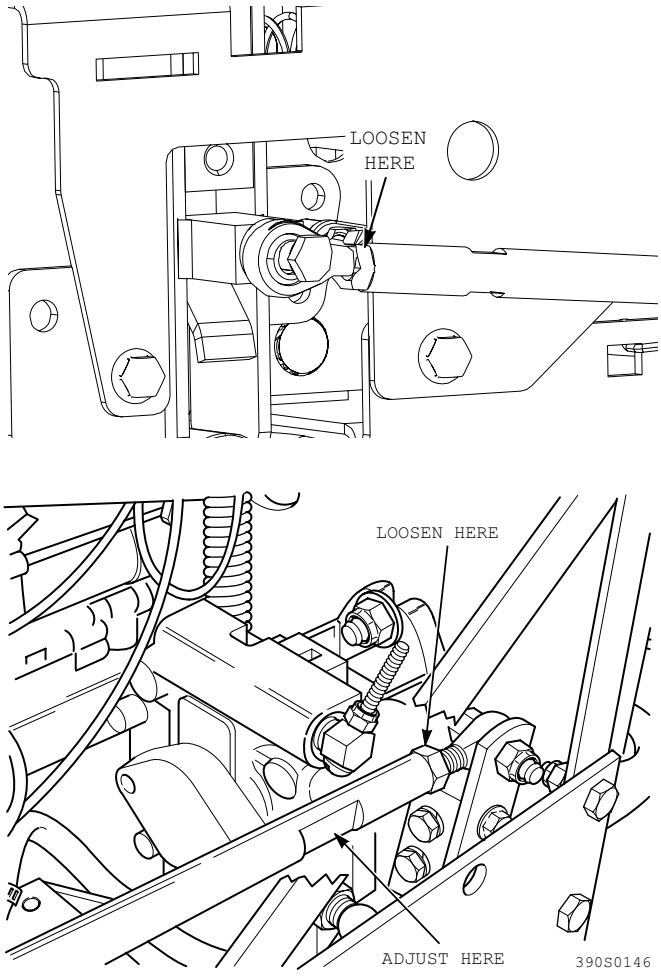


Figure 6-4. LH Steering Control Rod Adjustment

6. Actuate the steering control levers forward and reverse several times and return them to the neutral position.
7. Check that the drive wheels remained in neutral and re-adjust if necessary.
8. Check that the steering control levers hit the stop before the pumps reach full stroke. Adjust as needed.

TRACKING ADJUSTMENT

**⚠ CAUTION**

Stop the engine and remove the key from the ignition before making any adjustments. Wait for all moving parts to come to a complete stop before beginning work.

**⚠ CAUTION**

The engine and drive unit can get hot during operation causing burn injuries. Allow engine and drive components to cool before making any adjustments.

- NOTE -

Before proceeding with this adjustment, be sure that the caster wheels turn plus pivot freely and that the tire pressure in the drive wheels is correct. If the tire pressure is not correct, the machine will pull to the side with the lower pressure.

1. If at full speed the mower pulls right, it is an indication that the left wheel is turning faster than the right wheel. To adjust this condition, proceed as follows:

   A. Stop the machine and place the steering control levers in the neutral position. Loosen the lock nuts securing the ball joints at each end of the LH steering control rod. Rotate the control rod to lengthen the rod and tighten the lock nuts. This will cause the control rod to stroke the LH pump less, slowing down the LH wheel. See Figure 6-4.

- NOTE -

If after making the adjustment as outlined in step 1A, the machine creeps forward or backward, perform the neutral adjustment. See Neutral Adjustment on page 28.

2. If at full speed the mower pulls left, it is an indication that the right wheel is turning faster than the left wheel. To adjust this condition, proceed as follows:

   A. Stop the machine and place the steering control levers in the neutral position. Loosen the lock nuts securing the ball joints at each end of the RH steering control rod. Rotate the control rod to lengthen the rod and tighten the lock nuts. This will cause the control rod to stroke the RH pump less, slowing down the RH wheel. See Figure 6-3.

- NOTE -

If after making the adjustment as outlined in step 2A, the machine creeps forward or backward, perform the neutral adjustment. See Neutral Adjustment on page 28.

## 6.2 THROTTLE CONTROL AND CHOKE ADJUSTMENTS

These adjustments must be performed by your Scag dealer to insure proper and efficient running of the engine. Should either need adjustment, contact your authorized Scag service center.

## 6.3 BELT ADJUSTMENT

**⚠ WARNING**

Before removing any guards, shut the engine off and remove the ignition key.

All drive belts are spring loaded and self-tensioning, however after the first 2, 4, 8 and 10 hours of operation, the belts should be checked for proper alignment and wear. Thereafter, check the belts after every 40 hours of operation or weekly, whichever occurs first.

## ⚠ WARNING

If the pump drive belt fails, steering control will be lost which could result in serious injury or death. Replace the pump drive belt as needed or every 400 hours / 2 years, whichever occurs first.

## 6.4 BELT ALIGNMENT

Belt alignment is important for proper performance of your Scag mower. If you experience frequent belt wear or breakage, see your authorized Scag service center for belt adjustment.

## 6.5 CUTTER DECK ADJUSTMENTS

Cutter deck level, pitch and height are set at the factory. However, if these adjustments should ever need to be made, the following procedures will aid in obtaining the proper cutter deck adjustment.

- NOTE -

Before proceeding with the cutter deck adjustments, be sure that all tires are properly inflated.

### CUTTER DECK LEVEL

The cutter deck should be level from side-to-side for proper cutting performance. To check for level, be sure that the mower is on a flat, level surface, the tires are properly inflated and the cutter deck is set at the most common cutting height that you will use. On the RH side of the machine, check the distance from the top of the cutter deck to the floor. Next check the distance from the top of the cutter deck to the floor on the LH side of the machine. Both measurements should be the same. If the two measurements are different, the cutter deck level must be adjusted as follows:

1. If the cutter deck is lower on one side, loosen the elastic stop nuts securing the deck level links on the front and rear of the lower side. See Figure 6-5.

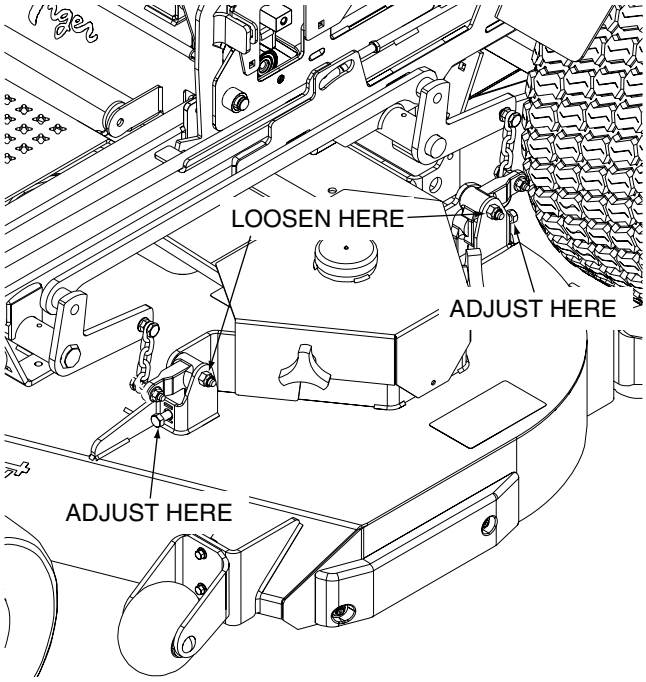


Figure 6-5. Cutter Deck Level Adjustment

2. Turn the adjustment bolts on the front and rear deck level links clockwise until the cutter deck is level between both sides. See Figure 6-5
3. Tighten the two (2) elastic stop nuts to secure the cutter deck in the proper position.

### CUTTER DECK PITCH

The pitch of the cutter deck should be equal between the front and rear of the cutter deck for proper cutting performance. To check for proper deck pitch, be sure that the mower is on a flat, level surface and the tires are properly inflated.

Check the distance from the top of the cutter deck to the floor at the rear RH side of the cutter deck directly behind the cutter deck hanging chains. Next check the distance from the top of the cutter deck to the floor at the front RH side of the cutter deck directly in front of the cutter deck hanging chains. The measurement at the front of the cutter deck should be the same as the rear of the deck. Make these measurements at the LH side of the cutter deck also. If the measurement at the front of the deck is not the same, the cutter deck pitch must be adjusted as follows:

1. Loosen the elastic stop nuts securing the deck level links on the front of the cutter deck on both sides. See Figure 6-6 and 6-7.

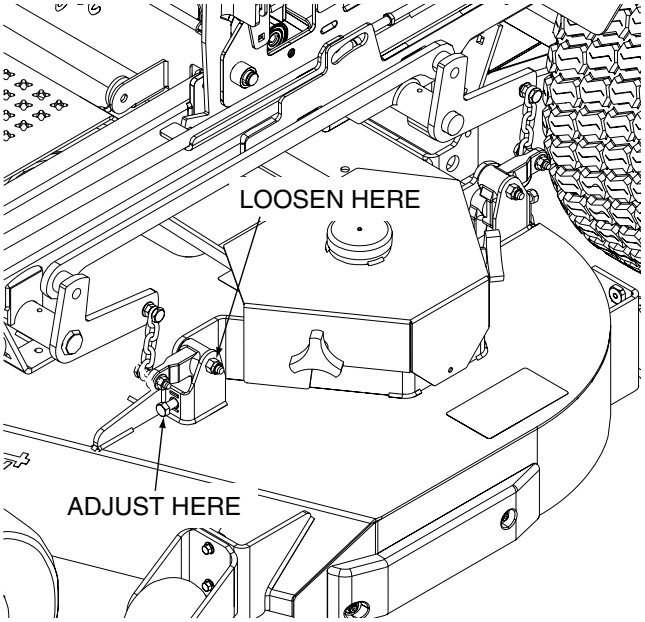


Figure 6-6. Cutter Deck Pitch Adjustment

2. Turn the adjustment bolts on both sides either clockwise to raise or counter-clockwise to lower the front of the cutter deck until the measurements are equal. Tighten the elastic stop nuts.

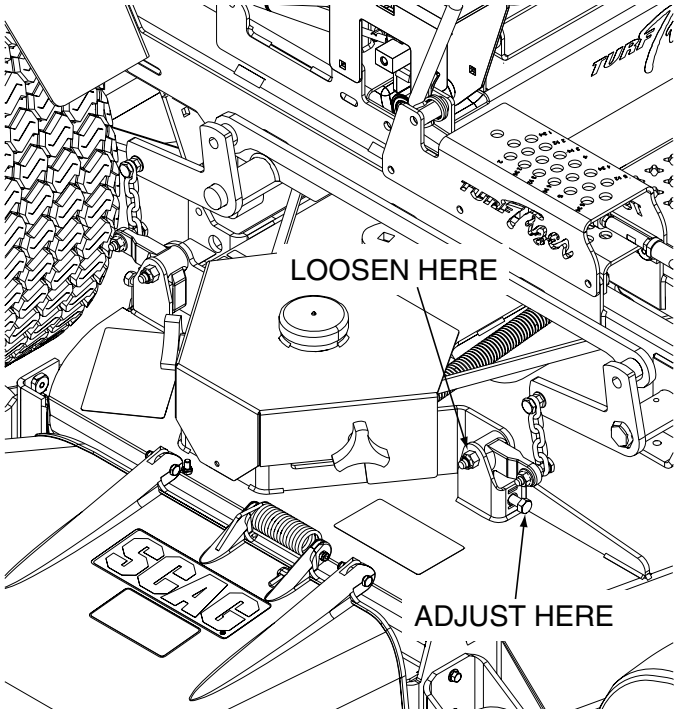


Figure 6-7. Cutter Deck Pitch Adjustment

- NOTE -

To prevent the cutter deck from teetering, all four (4) cutter deck hanging chains must have tension on them. If all four chains do not have tension on them and the deck teeters, you must re-adjust the cutter deck as outlined in the procedures above. All measurements should be taken from the top edge of the deck as the deck has an uneven bottom edge.

## CUTTER DECK HEIGHT

The cutter deck height adjustment is made to insure that the cutter deck is cutting at the height indicated on the cutting height index gauge. To check for proper deck height, be sure that the mower is on a flat, level surface and the tires are properly inflated.

1. Check the cutter deck cutting height by placing the lanyard pin in the 4-1/2" position on the cutting height index. Release the deck from the transport position and allow the deck to move to the 4-1/2" cutting height position.
2. Check the measurement from the floor to the cutter blade tip. If the measurement is not at 4-1/2", an adjustment can be made using the deck height control rod.
3. Loosen the jam nuts on both ends of the deck height control rod. See Figure 6-8.

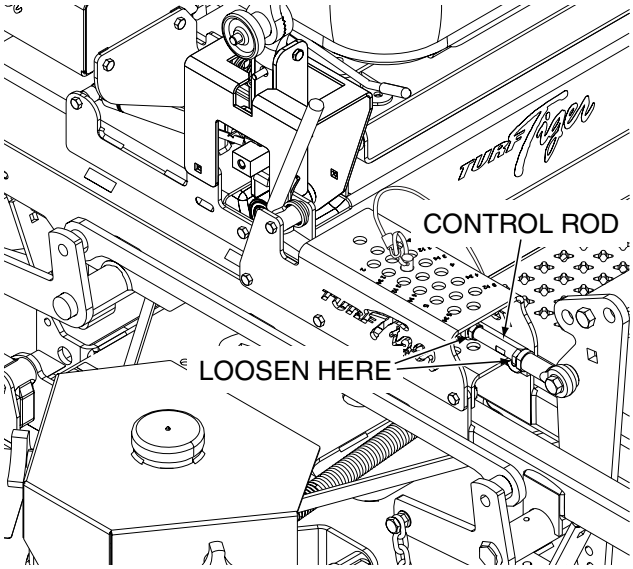


Figure 6-8. Cutter Deck Height Adjustment

4. Turn the control rod (See Figure 6-8) until the measurement from the floor to the cutter blade tip is at 4-1/2". Tighten the jam nuts on the control rod.

- NOTE -

If an adjustment had to be made, be sure that the cutter deck can easily be locked into the transport position.

## 6.6 CUSTOM-CUT BAFFLE ADJUSTMENT

The Custom-Cut Baffle is designed to deliver optimum airflow and superior cutting performance in any type of grass. The Custom-Cut Baffle can be raised or lowered to precisely tailor the deck's performance for the type of grass being cut. The baffle can be set in seven (7) different positions for optimum performance.

A. 3-1/2" or 3-3/4" Position - (See Figure 6-9). For very tall, wiry or tough-to-cut grass.

B. 4" (factory setting), 4-1/4" or 4-1/2" Position - (See Figure 6-9). For general purpose cutting. This gives the best mix of cutting performance in all types of grass.

C. 4-3/4" or 5-1/4" Position - (See Figure 6-9). Placing the baffle in either the 4-3/4" or 5-1/4" setting will enhance fall cutting (leaf pickup) and reduce cutter deck "blowout".

To adjust the Custom-Cut Baffle height:

1. Place the cutter deck in the transport position.
2. Remove the hardware securing the Custom-Cut Baffle to the cutter deck.

- NOTE -

Hardware location used in the illustrations are for reference only. Location of hardware may vary depending on cutter deck size.

3. Move the Custom-Cut Baffle to desired position. See Figure 6-9.
4. Reinstall the mounting hardware. Torque hardware to 39 lb-ft.

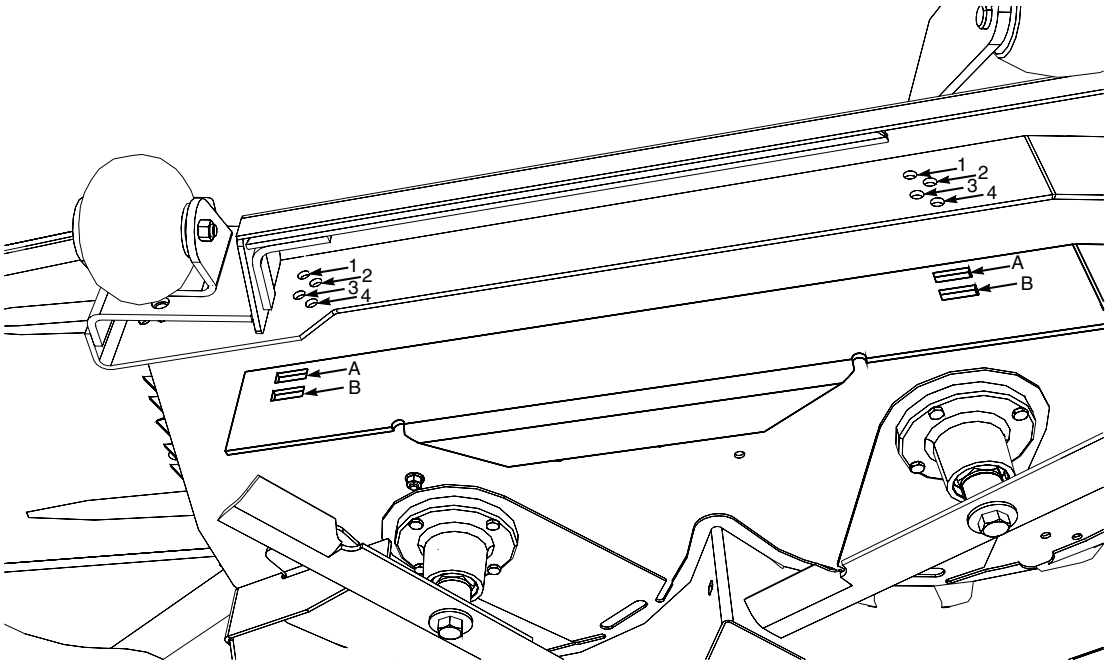


**Custom-Cut Baffle Adjustment**

| Mounting Slot Selected | | Mounting Hardware Location | | |
|---|---|---|---|---|
| Slot “A” | Hole 1 | Hole 2 | Hole 3 | Hole 4 |
| Height (inches) | 3-3/4” | 4-1/4” | 4-3/4” | 5-1/4” |
| | | | | |
| Slot “B” | | Hole 2 | Hole 3 | Hole 4 |
| Height (inches) | | 3-1/2” | 4” | 4-1/2” |

Figure 6-9. 7-Position Custom-Cut Baffle Adjustment

## 6.7 ELECTRIC CLUTCH ADJUSTMENT

The electric clutch serves two functions in the operation of the mower. In addition to starting and stopping the power flow to the cutter blades, the clutch also acts as a brake to assist in stopping blade rotation when the PTO is switched off or the operator presence circuit is interrupted.

When the clutch is disengaged, the air gap between the armature and rotor must be adjusted to fifteen thousandths of an inch, 0.015, for proper operation. The airgap adjustment is made at three bolts on the clutch. There are three inspection windows, one next to each adjusting bolt. See Figure 6-10.

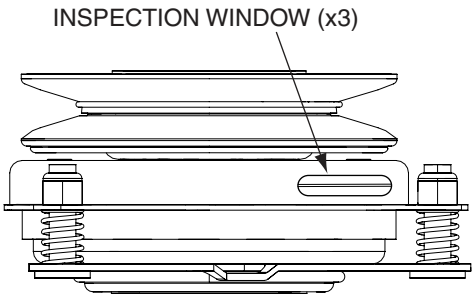


Figure 6-10. Clutch Air Gap Adjustment

1. Locate the inspection windows on the clutch.
2. Place a 0.015 feeler gauge in the slot between the rotor and the armature.
3. Tighten or loosen the adjusting bolt as needed to achieve the 0.015 inch airgap. See Figure 6-11. Perform this operation at all three inspection windows.

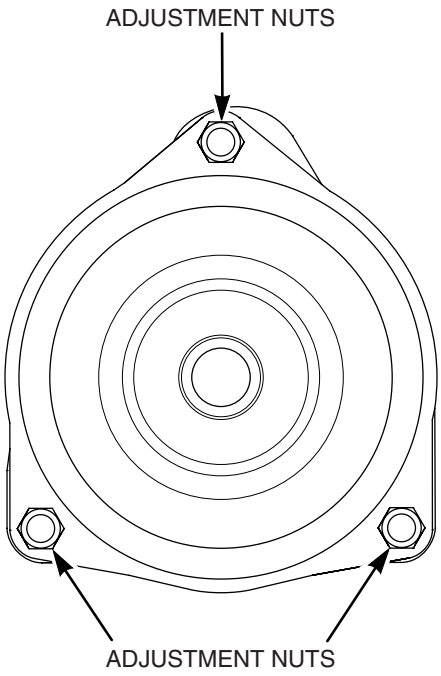


Figure 6-11. Clutch Air Gap Adjustment

This adjustment should be done every 500 hours of operation or annually, whichever comes first. In cases where the machine is heavily used, airgap settings should be checked more often.

If the air gap is too narrow, the clutch armature may drag when disengaged, resulting in premature failure.

If the air gap is too wide, the clutch may be slow to engage as the magnet must pull the armature in from a greater distance.

# MAINTENANCE

## 7.1 MAINTENANCE CHART - RECOMMENDED SERVICE INTERVALS

| HOURS | | | | | | | PROCEDURE | COMMENTS |
|---|---|---|---|---|---|---|---|---|
| BREAK-IN (FIRST 10) | 8 | 20 | 40 | 100 | 200 | 500 | | |
| X | | | | | | | Check all hardware for tightness | |
| X | | | | | | | Check hydraulic oil level | See paragraph 7.3 |
| X | | | | | | | Check all belts for proper alignment | See paragraph 7.9 |
| X | | | | | | | Check coolant level | See paragraph 7.13 |
| | X | | | | | | Check hydraulic fittings and hoses for leaks | Use extreme caution when checking the hydraulic hoses. See paragraph 2.7 |
| | X | | | | | | Check LPG fuel system for leaks | See Engine Owners Manual |
| | X | | | | | | Check engine oil level | See paragraph 7.4 |
| | X | | | | | | *Clean mower | See paragraph 7.14 |
| | X | | | | | | Check condition of blades | See paragraph 7.10 |
| | X | | | | | | Apply grease to fittings | See paragraph 7.2 |
| | X | | | | | | Check tire pressure | See paragraph 7.11 |
| | X | | | | | | Inspect seat belt for wear or damage | See paragraph 2.6 |
| | X | | | | | | Check the operator interlock system | See paragraph 4.3 |
| | X | | | | | | Check coolant level | See paragraph 7.13 |
| | | X | | | | | Change engine oil and filter | See paragraph 7.4 |
| | | | X | | | | Check battery electrolyte level clean battery posts and cables | See paragraph 7.8 |
| | | | X | | | | Inspect pump drive belt. Replace every 400 hours or 2 years, whichever occurs first | See paragraph 6.4 & 7.9 |
| | | | X | | | | Check belts for proper alignment | See paragraph 7.9 |
| | | | | X | | | Apply grease to fittings | See paragraph 7.2 |
| | | | | X | | | Change engine oil | See paragraph 7.4 |
| | | | | X | | | *Clean air cleaner element | See paragraph 7.7 |
| | | | | X | | | Check lubricant in cutter deck gearbox | See paragraph 7.12 |
| | | | | X | | | Check condition of fuel lines | |

* Perform these maintenance procedures more frequently under extreme dusty or dirty conditions

MAINTENANCE CHART - RECOMMENDED SERVICE INTERVALS (CONT'D)

| HOURS | | | | | | PROCEDURE | COMMENTS |
|---|---|---|---|---|---|---|---|
| BREAK-IN (FIRST 10) | 8 | 40 | 100 | 200 | 500 | | |
| | | | | X | | Apply grease to fittings | See paragraph 7.2 |
| | | | | X | | Check hardware for tightness | |
| | | | | X | | Change engine oil filter | See paragraph 7.4 |
| | | | | X | | Check hydraulic oil level | See paragraph 7.3 |
| | | | | | X | Replace engine fuel filter | See paragraph 7.5 |
| | | | | | X | Service LPG fuel system | See paragraph 7.6 |
| | | | | | X | Drain hydraulic system and replace hydraulic oil | Use SAE 20W50 Motor Oil. See paragraph 7.3 |
| | | | | | X | Replace hydraulic oil filter | See paragraph 7.3 |
| | | | | | X | Replace cutter deck gearbox lubricant | See paragraph 7.12 |
| | | | | | X | Change coolant | See paragraph 7.13 |

## 7.2 LUBRICATION

GREASE FITTING LUBRICATION CHART (SEE FIGURE 7-1)

| LOCATION | LUBRICATION INTERVAL | LUBRICANT | NO. OF PLACES |
|---|---|---|---|
| 1 Caster Wheel Pivot * | 500 Hours/Yearly | Chassis Grease | 2 |
| 2 Caster Wheel Bearings | 100 Hours/Monthly | Chassis Grease | 2 |
| 3 Cutter Deck Drive Shaft Slip Sleeve | 40 Hours/Weekly | Spindle Grease | 1 |
| 4 Cutter Deck Bellcranks | 100 Hours/Bi-Weekly | Chassis Grease | 4 |
| 5 Cutter Deck Pusharms | 100 Hours/Bi-Weekly | Chassis Grease | 2 |
| 6 PTO Spindle | 40 Hours/Weekly | Spindle Grease | 1 |
| 7 Cutter Deck Spindle | 40 Hours/Weekly | Spindle Grease | 3 |
| 8 Cutter Deck Drive Shaft U-Joints | 200 Hours/Monthly | Chassis Grease | 2 |

+ Compatible Greases: Scag Premium Chassis Grease p/n 486257
Scag Premium Spindle Grease p/n 486258

* PROCEDURE: Remove grease cap, part number 484195. Remove plug, part number 482028-01, and install grease zerk. Apply grease to the fitting until new grease appears at the top of the caster extension. Remove the grease zerk and reinstall the plug. Reinstall the grease cap. Special tool, part number 47007, is recommended for use in the installation of the grease cap.

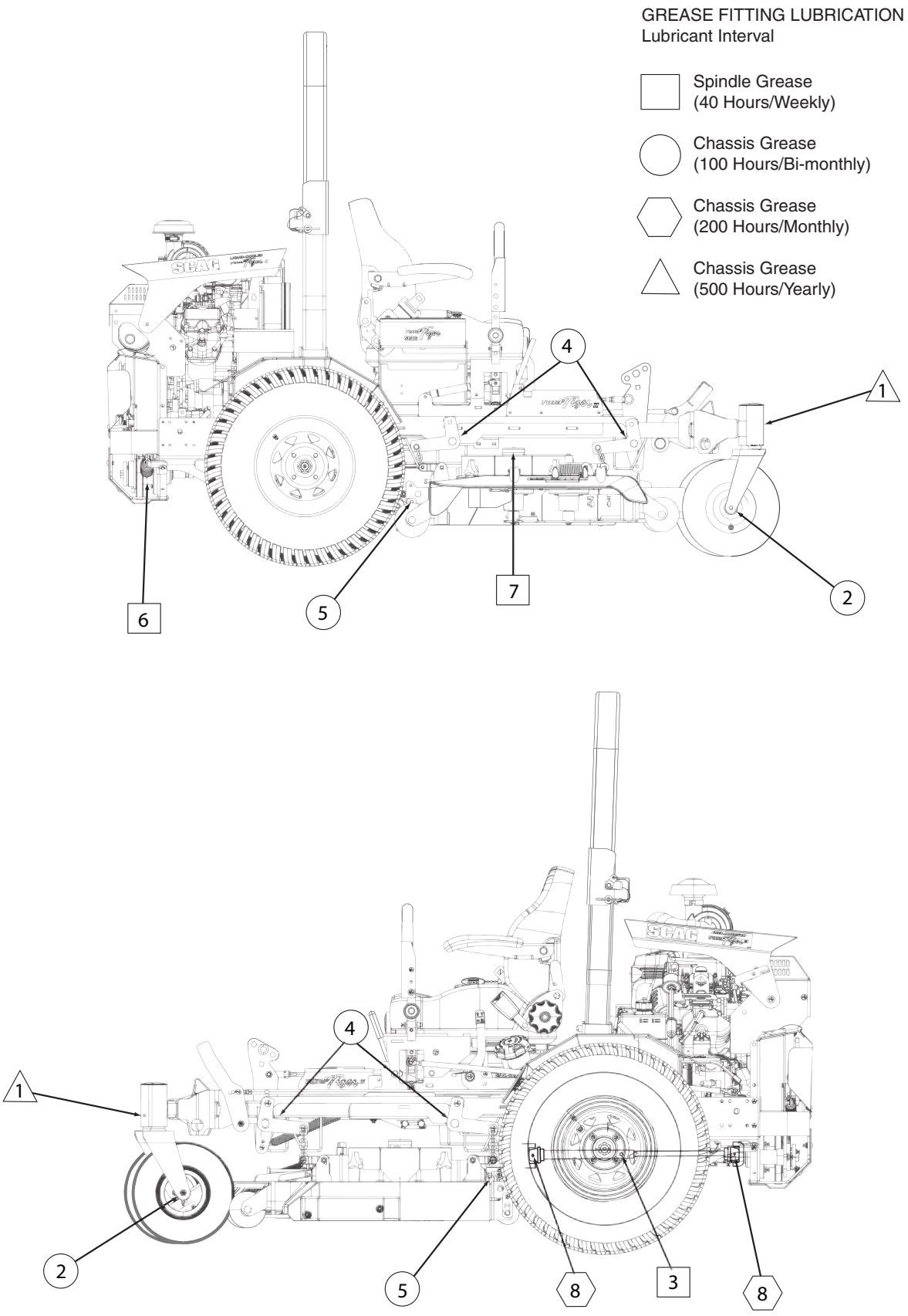


Figure 7-1. Lubrication Fitting Points

## 7.3 HYDRAULIC SYSTEM

### A. CHECKING HYDRAULIC OIL LEVEL

The hydraulic oil level should be checked after the first 10 hours of operation. Thereafter, check the oil after every 200 hours of machine operation or monthly, whichever occurs first.

- IMPORTANT -

If the oil level is consistently low, check for leaks and correct immediately.

1. Wipe dirt and contaminants from around the reservoir cap. Remove the cap from the hydraulic oil reservoir.
2. Visually check the level of hydraulic oil. Hydraulic oil must be at least 3" inches from top of the filler neck. If the level cannot be determined visually, use a clean tape measure to check the level. If the fluid is low, add 20W50 oil (Scag p/n 486255 - 1 Quart or p/n 486254 - 1 Gallon). DO NOT overfill; (overfilling the oil reservoir may cause oil seepage around the cap area).
3. Clean the fill cap and install it onto the reservoir.

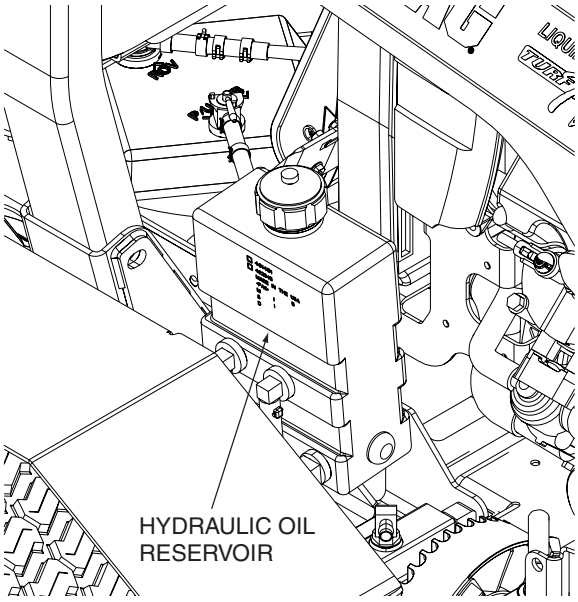


Figure 7-2. Hydraulic Oil Reservoir

### B. CHANGING HYDRAULIC OIL

The hydraulic oil should be changed after every 500 hours or annually, whichever occurs first. The oil should also be changed if the color of the fluid has become black or milky. A black color and/or a rancid odor usually indicates possible overheating of the oil, and a milky color usually indicates water in the hydraulic oil.

- IMPORTANT -

The hydraulic oil should be changed if you notice the presence of water or a rancid odor to the hydraulic oil.

1. Park the mower on a level surface and stop the engine.
2. Place a suitable container under the hydraulic oil filter. Remove the fill cap from the reservoir and the drain plug from the bottom of the drain tee fitting on the filter base. See Figure 7-3. Allow the fluid to drain into the container and properly discard it.

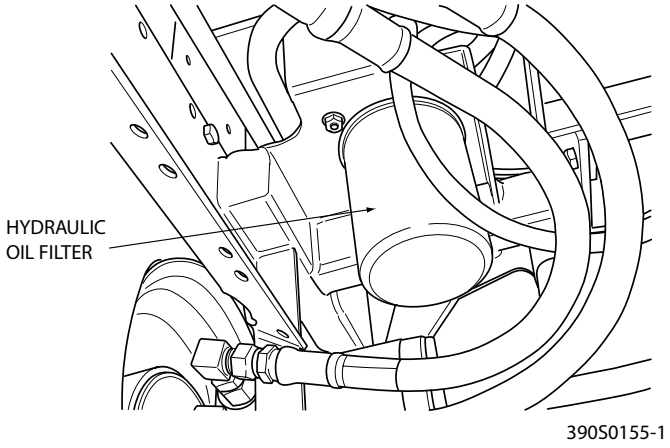


Figure 7-3. Hydraulic Oil Filter

3. Re-install the drain plug into the tee fitting and be sure it is tight.

- NOTE -

Before refilling the hydraulic oil reservoir the hydraulic oil filter should be changed as outlined in Procedure C "Changing Hydraulic Oil Filter Element" on page 38.

4. Fill the reservoir to 3-1/4" inches from the top of the filler neck with 20W50 oil (Scag p/n 486255 - 1 Quart or p/n 486254 - 1 Gallon).

5. Replace the reservoir fill cap. Start the engine and drive forward and backward for two minutes. Check the oil level in the reservoir. If necessary, add oil to the reservoir.

### C. CHANGING HYDRAULIC OIL FILTER ELEMENT

The hydraulic oil filter should be changed after every 500 hours of operation or annually, whichever occurs first.

1. Remove the oil filter element and properly discard it. See Figure 7-3. Fill the new filter with clean oil and install the filter. Hand tighten only.
2. Run the engine at idle speed with the speed control lever in neutral for five minutes.
3. Check the oil level in the hydraulic tank. It must be 3" inches from the top of the filler neck. If necessary, add SAE 20W50 oil (Scag p/n 486255 - 1 Quart or p/n 486254 - 1 Gallon).

## 7.4 ENGINE OIL

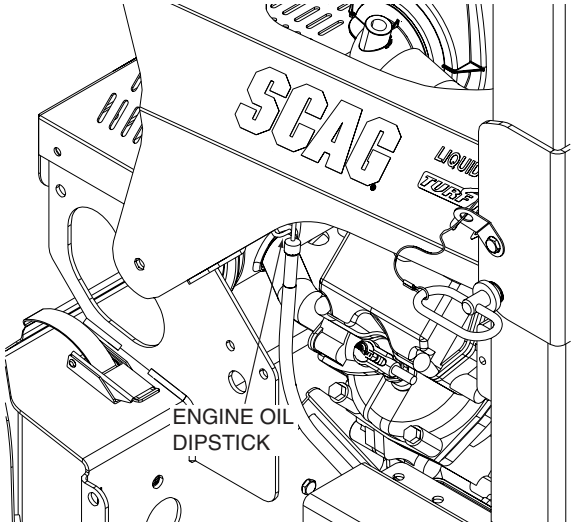


Figure 7-4. Engine Oil Fill/Dipstick Location
Gasoline Engine Shown

### A. CHECKING ENGINE CRANKCASE OIL LEVEL

The engine oil level should be checked after every 8 hours of operation or daily as instructed in the Engine Operator's Manual furnished with this mower. Refer to the Engine Operators Manual for details regarding your specific engine.

### B. CHANGING ENGINE CRANKCASE OIL

After the first 20 hours of operation, change the engine crankcase oil and replace the oil filter. Thereafter, change the engine crankcase oil after every 100 hours of operation or bi-weekly, whichever occurs first. See Figure 7-5. Refer to the Engine Operator's Manual for instructions regarding your specific engine.

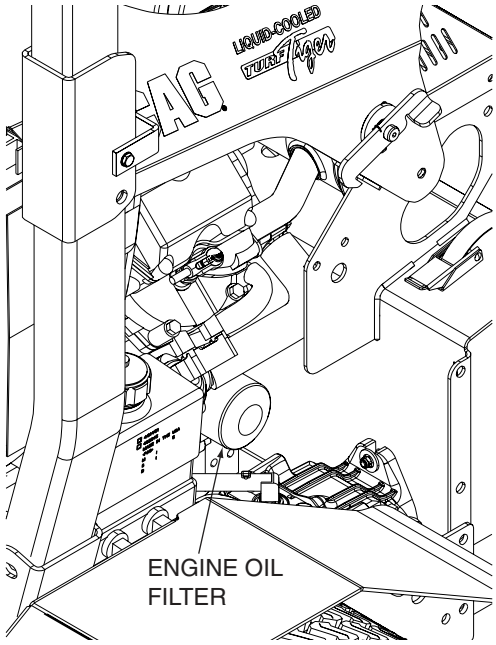


Figure 7-5. Oil Filter Location
Gasoline Engine Shown

### C. CHANGING ENGINE OIL FILTER

After the first 20 hours of operation, replace the engine oil filter. Thereafter, replace the oil filter after every 200 hours of operation or every month, whichever occurs first. See Figure 7-5. Refer to the Engine Operator's Manual for instructions regarding your specific engine.

## 7.5 ENGINE FUEL SYSTEM (GASOLINE & DIESEL MODELS)

**⚠ DANGER**

To avoid injury from burns, allow the mower to cool before removing the fuel tank cap and refueling.

## A. FILLING THE FUEL TANK (GASOLINE ENGINE)

Fill to the bottom of the filler neck insert (approximately 12 gallons indicating Full (F) on the fuel gauge) at the beginning of each operating day. See Figure 7-6. Do not overfill. Use clean, fresh unleaded gasoline with a minimum octane rating of 87 and a maximum of 10% Ethanol.

DO NOT use E85 Fuel. Using E85 Fuel will cause severe damage to the engine.

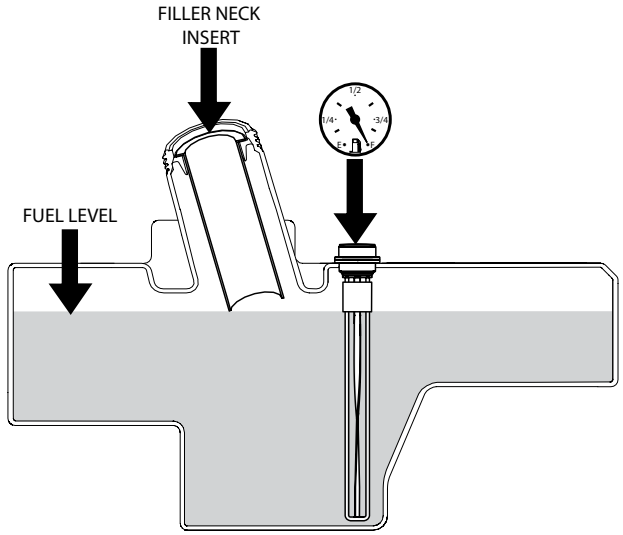


Figure 7-6. C.A.R.B. / EPA Phase 3 Fuel Level

To avoid personal injury or property damage, use extreme care in handling gasoline. Gasoline is extremely flammable and the vapors are explosive.

1. Extinguish all cigarettes, cigars, pipes and other sources of ignition.
2. Use only an approved gasoline container.
3. Never remove the gas cap or add fuel with the engine running. Allow the engine to completely cool before fueling.
4. Never fuel the machine indoors or in an enclosed trailer.
5. Never store the machine or fuel container where there is an open flame, spark or pilot light such as on a water heater or other appliances.
6. Never fill containers inside a vehicle or on a truck or trailer bed with a plastic liner. Always place containers on the ground away from your vehicle before filling.
7. Remove the machine from the truck or trailer and fuel on the ground. If this is not possible, then refuel the machine with a portable container, rather than from a gasoline dispenser nozzle.
8. Keep the nozzle in contact with the rim of fuel tank or container opening at all times until fueling is complete. Do not use a nozzle lock-open device.
9. If fuel is spilled on clothing, change clothing immediately and wash affected skin.
10. Replace gas cap and tighten the fuel cap until it ratchets.

## B. FILLING THE FUEL TANK (DIESEL ENGINE)

Fill the fuel tank at the beginning of each operating day to within one inch below the filler neck. Do not overfill. Use clean, fresh diesel fuel with a minimum cetane rating of 40.

## C. REPLACING IN-LINE FUEL FILTER ELEMENTS (GASOLINE & DIESEL MODELS ONLY)

The engine fuel filter should be replaced after every 500 hours of operation or annually, whichever occurs first. See Figure 7-7.

1. Close the shut-off valve.
2. Remove the two clamps securing the fuel filter to the fuel hose. Remove the fuel filter.
3. Install a new fuel filter. Be sure it is installed in the proper direction. Secure to the fuel hose using the two clamps.
4. Open the fuel shut-off valve.

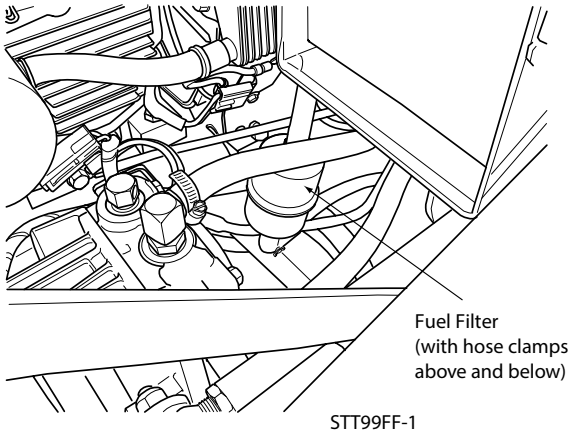


Figure 7-7. Fuel Filter

## 7.6 LPG ENGINE FUEL SYSTEM

**⚠ DANGER**

To avoid injury from burns, allow the mower to cool before removing the LP fuel tank.

Maintenance must be performed to the LPG fuel system after 1000 hours of operation or annually, whichever occurs first. Contact your authorized Scag service center for details and maintenance. See Engine Owner's manual for service information

1. Secure loose cylinders when transporting. Transport in the upright position.
2. Fill at a reputable dealer.
3. Do not store tanks (empty or filled) inside any building or enclosed trailer.
4. Turn off valve at tank during machine storage.

**⚠ WARNING**

DO NOT overfill. Follow approved procedures for filling.

This cylinder is designed to contain LP Gas; a flammable liquid and gas under pressure.

DO NOT expose to fire or heat above 120 degrees Farenheit.

Be sure all fittings are tight and leak proof.

DO NOT attempt repairs. Contact an authorized LP Gas Dealer.

Cylinder must be retested within 12 years of manufacture date.

**⚠ CAUTION**

It is important that anyone who changes or uses this cylinder be aware of its dangerous potential and use it only in compliance with all applicable governmental regulations including NFPA No.58

5. Cylinders that show excessive denting, bulging, gouging or corrosion shall be removed from service.
6. Do not dispose of cylinders without assistance of qualified propane personnel.

- NOTE -

LP cylinders must be vapor withdrawal type (identified by green band on tank) designed for horizontal mounting on machine with LH threaded disconnect coupler.

7. Replacement cylinders must meet requirements of original cylinders.
8. Refuel outdoors.

## 7.7 ENGINE AIR CLEANER

### A. CLEANING AND/OR REPLACING AIR CLEANER ELEMENT

For any air cleaner, the operating environment dictates the air cleaner service periods. Inspect and clean the air cleaner element after every 100 hours of operation or bi-weekly, whichever occurs first and replace the element if required. See Engine Owner's Manual for service information.

- NOTE -

In extremely dusty conditions it may be necessary to check the element once or twice daily to prevent engine damage.

1. Unhook the clamps securing the air cleaner cover to the air filter canister. Remove the air cleaner cover and set aside.
2. Remove the air cleaner and inspect.
3. Clean or replace the air cleaner and foam pre-cleaner as recommended by the engine manufacturer.
4. Replace the air cleaner cover and be sure to snap the latches closed.

## 7.8 BATTERY

**⚠ WARNING**

Lead-acid batteries produce flammable and explosive gases. To avoid personal injury when checking, testing or charging batteries, DO NOT use smoking materials near batteries. Keep arcs, sparks and flames away from batteries. Provide proper ventilation and wear safety glasses.

**⚠ WARNING**

Battery posts, terminals, and related accessories contain lead and lead compounds, chemicals known to cause cancer and reproductive harm. Wash hands after handling.

**⚠ WARNING**

Electric storage battery fluid contains sulfuric acid which is POISON and can cause SEVERE CHEMICAL BURNS. Avoid contact of fluid with eyes, skin, or clothing. Use proper protective gear when handling batteries. DO NOT tip any battery beyond 45° angle in any direction. If fluid contact does occur, follow first aid suggestions below.

BATTERY ELECTROLYTE FIRST AID

External Contact — Flush with water.

Eyes — Flush with water for at least 15 minutes and get medical attention immediately.

Internal — Drink large quantities of water. Follow with Milk Of Magnesia, beaten egg, or vegetable oil. Get medical attention immediately. In case of internal contact, DO NOT give fluids that would induce vomiting.

### A. CHARGING THE BATTERY

Refer to the battery charger's manual for specific instructions.

Under normal conditions the engine's alternator will have no problem keeping a charge on the battery. If the battery has been completely discharged for a long period of time, the alternator may not be able to recharge the battery, and a battery charger will be required.

DO NOT charge a frozen battery. It may explode and cause injury. Let the battery warm before attaching a charger.

Whenever possible, remove the battery from the mower before charging and make sure the electrolyte covers the plates in all cells.

**⚠ WARNING**

BATTERIES PRODUCE EXPLOSIVE GASES. Charge the battery in a well ventilated space so gases produced while charging can dissipate.

Charging rates between 3 and 50 amperes are satisfactory if excessive gassing or spewing of electrolyte does not occur or the battery does not feel excessively hot (over 125°F). If spewing or gassing occurs or the temperature exceeds 125°F, the charging rate must be reduced or temporarily stopped to permit cooling.

### B. JUMP STARTING

1. The booster battery must be a 12 volt type. If a vehicle is used for jump starting, it must have a negative ground system.
2. When connecting the jumper cables, connect the positive cable to the positive battery post, then connect the negative cable to the negative battery post.

## 7.9 DRIVE BELTS

All drive belts are spring-loaded and self-tensioning, however after the first 2, 4, 8 and 10 hours of operation, the belts should be checked for proper alignment and wear. Thereafter, check the belts after every 40 hours of operation or weekly, whichever occurs first.

- NOTE -

If you experience frequent belt wear or breakage, see your authorized Scag service center for belt adjustment.

**⚠ WARNING**

If the pump drive belt fails, steering control will be lost which could result in serious injury or death. Replace the pump drive belt as needed or every 400 hours / 2 years, whichever occurs first.

## 7.10 CUTTER BLADES

### A. BLADE INSPECTION

1. Remove the ignition key before servicing the blades.
2. Raise the mower deck to the highest position. Place the lanyard pin in the highest cutting height position to prevent the cutter deck from falling.

**⚠ WARNING**

Always wear proper hand and eye protection when working with cutter blades.

3. Check the cutter blades for straightness. If the cutter blades appear bent, they will need to be replaced.
4. Check the cutter blades for wear. If any part of the cutter blade is worn to 1/2 its original thickness, replace the cutter blade.

**⚠ WARNING**

Do not attempt to straighten a bent blade, and never weld a broken or cracked blade. Always replace it with a new blade to assure safety.

5. Check the cutter blades for gouges. If there are gouges on the top or bottom surfaces of the cutter blade, replace the cutter blade.
6. If a blade cutting edge is dull or nicked, it should be sharpened. Remove the blades for sharpening. See "Blade Replacement."

- NOTE -

Keep the blades sharp. Cutting with dull blades not only yields a poor mowing job, but slows the cutting speed of the mower and causes extra wear on the engine and the blade drive by pulling hard.

### B. BLADE SHARPENING

- NOTE -

If possible, use a file to sharpen the blade. Using a wheel grinder may burn the blade.

- NOTE -

DO NOT sharpen the blades beyond 1/3 of the width of the blade. See Figure 7-8.

1. Sharpen the cutting edge at the same bevel as the original. See Figure 7-8. Sharpen only the top of the cutting edge to maintain sharpness.

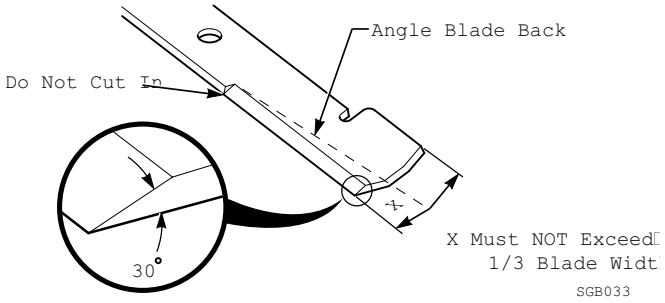


Figure 7-8. Blade Sharpening

2. Check the balance of the blade. If the blades are out of balance, vibration and premature wear can occur. The cutter blades should be balanced to 1-1/2 oz-in. See your authorized Scag dealer for blade balancing or special tools, if you choose to balance your own blades.

### C. BLADE REPLACEMENT

**⚠ WARNING**

Always wear proper hand and eye protection when working with cutter blades.

1. Remove the ignition key before replacing the blades.

2. Raise the mower deck to the highest position. Place the lanyard pin in the highest cutting height position to prevent the cutter deck from falling.
3. Secure the cutter blades to prevent them from rotating, (use the optional Blade Buddy tool P/N 9212, to assist in securing the cutter blades), remove the nut from the blade attaching bolt. Remove the cutter blade, bolt and spacer from the spindle shaft. See Figure 7-9.

- NOTE -

The front of the machine will have to be raised slightly to remove the blade bolt from the cutter spindle.

## ⚠ CAUTION

Inspect the cutter blade spacer(s) and washer for wear and/or cupping. Replace the worn parts. Worn spacer(s) and/or washer will not allow proper tightening of the cutter blade and can lead to cutter blade failure, personal injury or property damage.

4. To install the new cutter blade, put the flat washer onto the blade bolt and slide the bolt into the hole in the cutter blade.

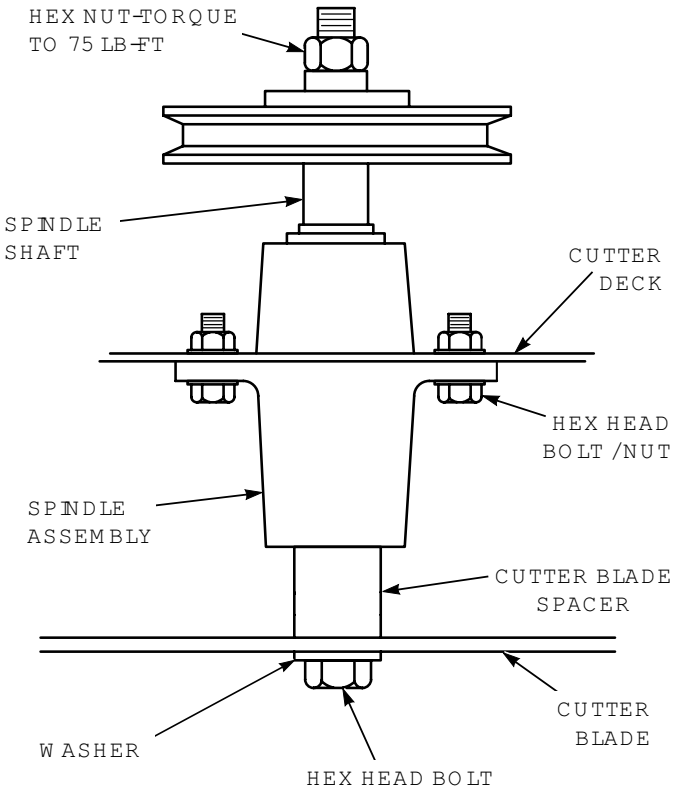


Figure 7-9. Blade Replacement

- NOTE -

Be sure that the blade is installed with the lift wing toward the top.

5. Install the spacer onto the blade bolt and insert the bolt into the cutter spindle shaft.
6. Install the hex nut to the blade bolt at the top of the cutter spindle. Secure the blades from rotating and torque to 75 lb-ft. See Figure 7-9.

## 7.11 TIRES

Check the tire pressures after every 8 hours of operation or daily.

| | |
|---|---|
| Caster Wheels | Flat Free |
| Drive Wheels | 8 PSI |

## 7.12 CUTTER DECK GEARBOX

### A. CHECKING LUBRICANT LEVEL

**⚠ CAUTION**

The cutter deck gearbox can reach high operating temperatures. Allow the cutter deck gearbox to cool before servicing.

The fluid level in the cutter deck gearbox should be checked after every 100 hours of operation or bi-weekly, whichever occurs first.

1. Lower the cutter deck to to its lowest position to gain access to the cutter deck gearbox.
2. Clean and remove the check plug from the side of the gearbox. See Figure 7-10.

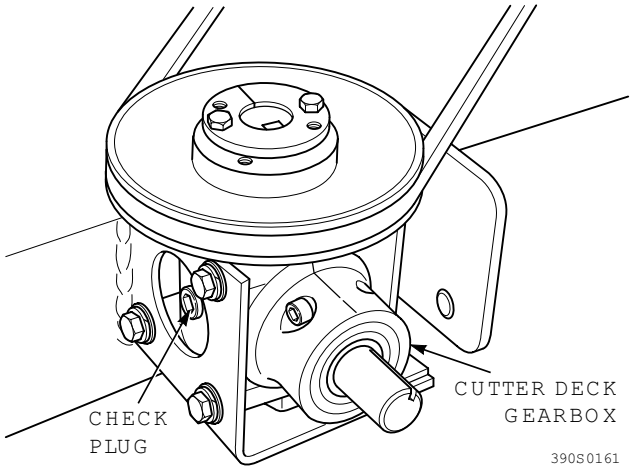


Figure 7-10. Cutter Deck Gearbox

3. Visually check that the lubricant level is up to the bottom edge of the check plug hole. If lubricant is low, add SAE 80W90 or if replaced with Scag 75W90 lubricant (p/n 486578) add 75W90 lubricant (p/n 486578) through the check plug hole in the gearbox until it is level with the bottom of the check plug hole. Install the check plug and tighten securely.

### B. CHANGING LUBRICANT

The lubricant in the cutter deck gearbox should be changed after every 500 hours of operation or yearly, whichever occurs first.

1. Place a suitable container beneath the cutter deck gearbox and locate the gearbox drain plug.
2. Remove the drain plug, drain the lubricant into the container and properly discard it.
3. Re-install the drain plug and add Scag 75W90 lubricant (p/n 486578) through the check plug hole in the gearbox until it is level with the bottom of the check plug hole. Install the check plug and tighten securely.

## 7.13 COOLING SYSTEM

(LIQUID-COOLED MACHINES ONLY)

**⚠ WARNING**

To avoid burns, always allow the engine to cool before removing the radiator cap.

### A. CHECKING COOLANT LEVEL

The coolant level should be checked before each day of operation.

1. Remove the radiator cap by turning it slowly counterclockwise to the first stop and allow any pressure to be released. Push down on the cap and turn counterclockwise to remove.
2. Visually check the coolant level. The coolant level should be up to the bottom of the filler neck as shown in Figure 7-11. Add a mixture of coolant and soft water as needed.

- NOTE -

Refer to the coolant manufacturer's instructions for the proper coolant mixture ratio.

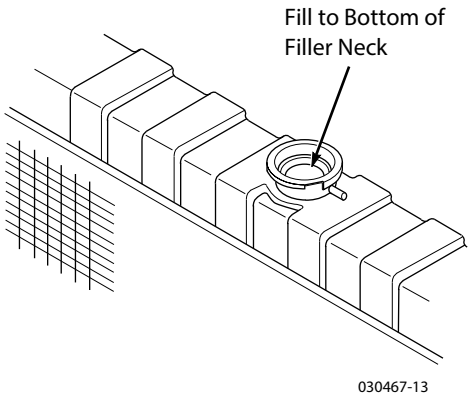


Figure 7-11. Coolant Level

3. Replace the radiator cap. Push down on the cap and turn clockwise until it stops.

- NOTE -

The cooling system should be flushed and the coolant replaced every 500 hours of operation or annually. See your Scag dealer for proper coolant replacement.

### B. CLEANING THE RADIATOR DEBRIS SCREEN

After each day of operation, remove and clean the radiator debris screen.

**⚠ CAUTION**

To avoid personal injury, always wear safety glasses when using compressed air.

1. Pull the debris screen up to remove.
2. Clean the debris screen with compressed air or a water hose.

- NOTE -

Check the radiator for excessive debris and clean with compressed air. Never spray a hot engine with water, use only compressed air to remove debris.

3. Re-install the debris screen to the radiator.

### C. CHECKING THE FAN BELT TENSION (LIQUID-COOLED ENGINES ONLY)

Periodically check the fan belt tension. The belt should deflect 1/2" with 10 pounds of pressure. See your Scag dealer if the belt is in need of adjustment or replacement.

## 7.14 BODY, DECK, AND UPHOLSTERY

**⚠ CAUTION**

Do not wash any portion of the equipment while it is hot. Do not wash the engine; use compressed air.

1. After each use, wash the mower and cutter deck. Use cold water and automotive cleaners. Do not use pressure cleaners.
2. Do not spray electrical components.
3. Use a mild soap solution or a vinyl/rubber cleaner to clean the seat.
4. Repair damaged metal surfaces using Scag touch-up paint available from your authorized Scag dealer. Wax the mower for maximum paint protection.

# ILLUSTRATED PARTS LIST

## 8.1 SCAG APPROVED ATTACHMENTS AND ACCESSORIES

Attachments and accessories manufactured by companies other than Scag Power Equipment are not approved for use on this machine.

Scag approved attachments and accessories:

- GC-3B (p/n 901S) - Requires a 901R (52 STTII Install Kit) or 900X (61 STTII/SCZ Install Kit)
- GC-CS* (p/n 901T) - Requires a 901R (52 STTII Install Kit) or 900X (61 STTII/SCZ Install Kit)

*GC-CS (p/n 901T) - Not applicable to machines equipped with LP engines.

- Mulch Plate (52,61,72)(p/n 9287, 9288, 920F)
- Hurricane Mulch (52,61,72)(p/n 9284, 9285, 920E)
- STTII-OCDC-52V (p/n 923C)
- SCZ/STT/STTII-OCDC-61V (p/n 923D)
- SZL / SFZ / SPZ / STT/STTII Hitch (p/n 9242)
- STT Bumper (p/n 9256)
- STTII Lights (p/n 923E)
- STTII LED Lights (p/n 923Y)
- Tiger Striper (p/n 923G) - Requires a 923H Install Kit
- Air Filter Indicator (922U)
- Blade Buddy (p/n 9212)

Scag Premium Lubricants:

- Chassis Grease (p/n 486257)
- Spindle Grease (p/n 486258)
- 20W50 Oil - Gallon (p/n 486254)
- 20W50 Oil - Quart (p/n 486255)
- 75W90 Gear Lubricant (p/n 486578)

NOTES

# STTII 52V CUTTER DECK

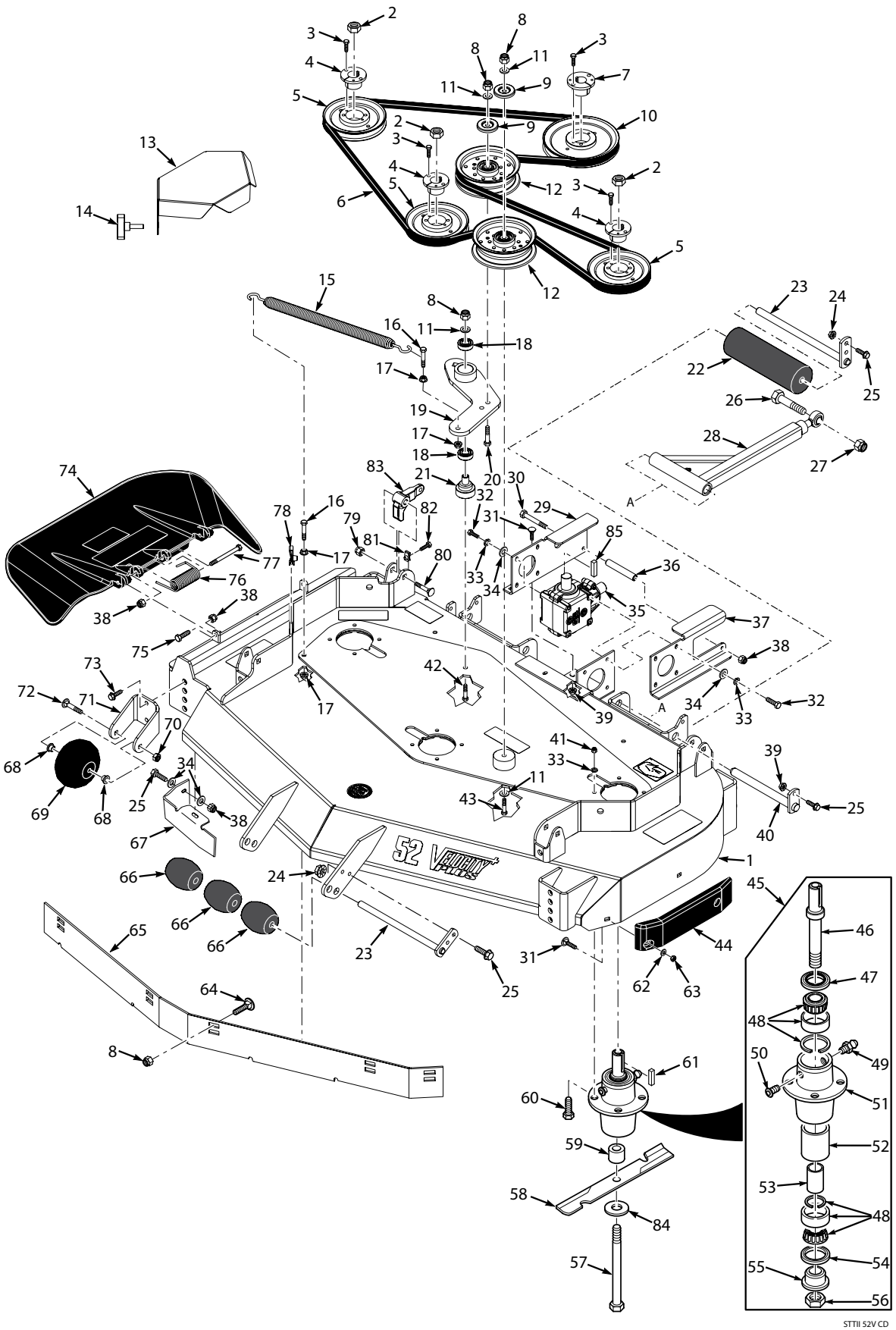

# STTII 52V CUTTER DECK

| Ref. No. | Part No. | Description |
|---|---|---|
| 1 | 463226 | Cutter Deck w/Decals - 52V |
| 2 | 04020-09 | Nut, 5/8-11 UNC |
| 3 | 04001-172 | Bolt, Hex Head 1/4-20 x 1" Grade 8 |
| 4 | 48926 | Tapered Hub, 1-1/8" Bore |
| 5 | 482744 | Pulley, 5.75 O.D. |
| 6 | 482281 | Belt, Cutter Deck Drive |
| 7 | 48141 | Tapered Hub, 1" Bore |
| 8 | 04021-09 | Nut, Elastic Stop 3/8-16 |
| 9 | 424367 | Dust Shield |
| 10 | 482747 | Pulley, 6.95 O.D. |
| 11 | 04043-04 | Flatwasher, 3-8/.391 x .938 x .105 HD |
| 12 | 483215 | Pulley, Idler |
| 13 | 428245 | Belt Cover LH |
| | 428246 | Belt Cover RH |
| 14 | 481625-01 | Knob w/Stud |
| 15 | 483704 | Spring |
| 16 | 04001-136 | Bolt, Hex Head 3/8-16 x 1-1/2" Grade 8 |
| 17 | 04019-04 | Nut, Serrated Flange 3/8-16 |
| 18 | 48224 | Bearing |
| 19 | 461842 | Idler Arm Weldment (incl.#18) |
| 20 | 04001-22 | Bolt, Hex Head 3/8-16 x 2-3/4" |
| 21 | 43681 | Pivot, Idler |
| 22 | 48038 | Guide Roller |
| 23 | 45944 | Roller Shaft |
| 24 | 04117-01 | Nut, Elastic Stop Flange 5/16-18 |
| 25 | 04001-09 | Bolt, Hex Head 5/16-18 x 1" |
| 26 | 04001-79 | Bolt, Hex Head 5/8-11 x 4-1/2" |
| 27 | 04021-13 | Nut, Elastic Stop 5/8-11 |
| 28 | 461516 | Pusharm Assy. |
| 29 | 428027 | Mounting Plate |
| 30 | 04001-154 | Bolt, Hex Head 5/16-18 x 4-3/4" |
| 31 | 04003-12 | Bolt, Carriage 5/16-18 x 3/4" |
| 32 | 04001-09 | Bolt, Hex Head 5/16-18 x 1" |
| 33 | 04030-03 | Lockwasher, 5/16" |
| 34 | 04040-15 | Flatwasher, 5/16-.375 x .875 x .083 |
| 35 | 482486 | Gearbox |
| 36 | 43763 | Spacer |
| 37 | 428026 | Mounting Plate |
| 38 | 04021-10 | Nut, Elastic Stop 5/16-18 |
| 39 | 04019-03 | Nut, Serrated Flange 5/16-18 |
| 40 | 451240 | Shaft Weldment, Pusharm |
| 41 | 04021-22 | Nut, Elastic Stop 5/16-18 Grade 8 |
| 42 | 04001-54 | Bolt, Hex Head 3/8-16 x 3" |
| 43 | 04001-51 | Bolt, Hex Head 3/8-16 x 3-3/4" |
| 44 | 483176 | Pad, Deck Wear |

| Ref. No. | Part No. | Description |
|---|---|---|
| 45 | 461663 | Spindle Assembly (INCL 33,41,60) |
| 46 | 43589 | Shaft, Spindle |
| 47 | 481024 | Seal, Top |
| 48 | 481022 | Bearing Assembly |
| 49 | 48114-04 | Grease Fitting |
| 50 | 48677 | Relief Fitting, Tapered Spindle |
| 51 | 43644 | Spindle Housing |
| 52 | 43312 | Spacer, Outside |
| 53 | 43296 | Spacer, Inside |
| 54 | 481025 | Seal Bottom |
| 55 | 43297 | Spindle Bushing, Bottom |
| 56 | 481035 | Nut, Special 1-1/16 - 18 |
| 57 | 04001-41 | Bolt, Hex Head 5/8-11 x 9-1/2" |
| 58 | 482878 | Cutter Blade, 18" |
| 59 | 43590 | Spacer, Spindle Bottom |
| 60 | 04001-176 | Bolt, 5/16-18 x 1-3/4" Grade 8 |
| 61 | 04063-08 | Key, 1/4 x 1/4 x 2" |
| 62 | 04040-04 | Flatwasher, 5/16-.344 x .688 x .065 |
| 63 | 04021-04 | Nut, Center Lock 5/16-18 |
| 64 | 04003-23 | Bolt, Carriage 3/8-16 x 1" |
| 65 | 424840 | Baffle, Custom Cut - 52V |
| 66 | 482295 | Wheel, Anti-Scalp |
| 67 | 424677 | Baffle, Turbo |
| 68 | 48100-15 | Bushing, .376 I.D. Oilite |
| 69 | 481632 | Anti-Scalp Wheel |
| 70 | 04021-05 | Nut, Center Lock 3/8-16 |
| 71 | 422478 | Bracket, Anti-Scalp |
| 72 | 04003-26 | Bolt, Carriage 3/8-16 x 4" |
| 73 | 04017-27 | Bolt, Hex Head Serrated Flange 3/8-16 x 1" |
| 74 | 461845 | Discharge Chute Assy. |
| | *462475 | Discharge Chute Assy. (CA) |
| 75 | 04001-12 | Bolt, Hex Head 5/16-18 x 1-3/4" |
| 76 | 483378 | Spring, Discharge Chute |
| 77 | 04001-154 | Bolt, Hex Head 5/16-18 x 4-3/4" |
| 78 | 04110-04 | U-Nut, 3/8-16 |
| 79 | 04021-11 | Nut, Elastic Stop 7/16-14 |
| 80 | 04003-42 | Bolt, Carriage 7/16-14 x 2-1/4" |
| 81 | 04110-03 | U-Nut, 3/8-16 (short) |
| 82 | 04107-04 | Bolt, Hex Head 3/8-16 x 2" Special |
| 83 | 485528 | Lever, Deck Level |
| 84 | 04043-06 | Flatwasher, 5/8-.688 x 1.75 x .134 HD |
| 85 | 04063-01 | Key, 1/4 x 1/4 x 1-1/4" |

* = California Models Only (not shown)

# STTII 61V & 72V CUTTER DECKS

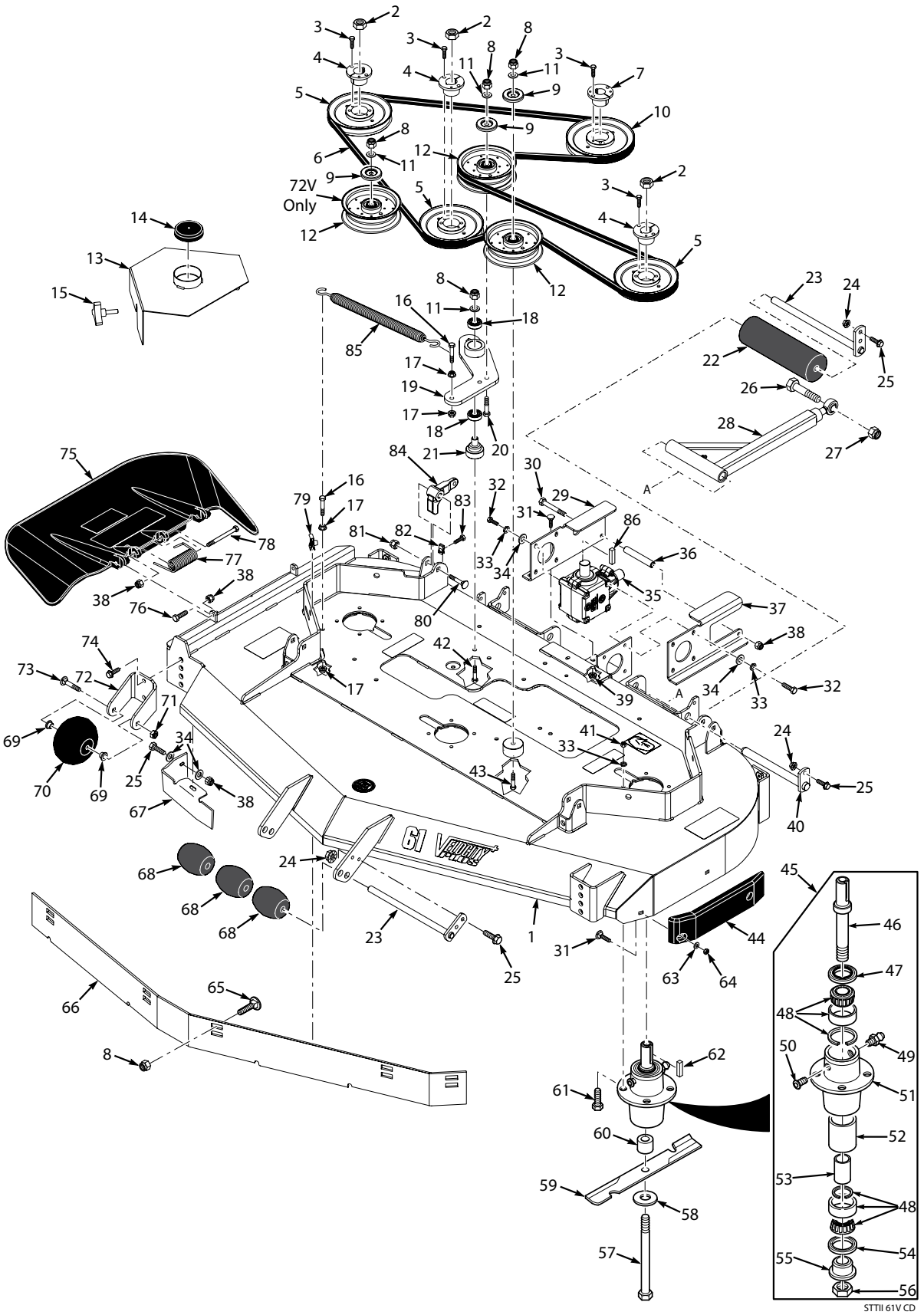

# STTII 61V & 72V CUTTER DECKS

| Ref. No. | Part No. | Description | 61 | 72 |
|---|---|---|---|---|
| 1 | 463227 | Cutter Deck w/Decals - 61V | X | |
| | 463228 | Cutter Deck w/Decals - 72V | | X |
| 2 | 04020-09 | Nut, 5/8-11 UNC | X | X |
| 3 | 04001-172 | Bolt, Hex Head 1/4-20 x 1" Grade 8 | X | X |
| 4 | 48926 | Tapered Hub, 1-1/8" Bore | X | X |
| 5 | 482745 | Pulley, 6.35 O.D. | X | X |
| | 482747 | Pulley, 6.95 O.D. | | X |
| 6 | 481558 | Belt, Deck Drive - 61V | X | |
| | 481980 | Belt, Deck Drive - 72V | | X |
| 7 | 48141 | Tapered Hub, 1" Bore | X | X |
| 8 | 04021-09 | Nut, Elastic Stop 3/8-16 | X | X |
| 9 | 424367 | Dust Shield | X | X |
| 10 | 482746 | Pulley, 6.75 O.D. | X | |
| | 482745 | Pulley, 6.35 O.D. | X | X |
| | 482744 | Pulley, 5.75 O.D. (72V-25KBD) | | X |
| 11 | 04043-04 | Flatwasher, 3/8-.391 x .938 x .105 HD | X | X |
| 12 | 483215 | Pulley, Idler | | |
| 13 | 463175 | Belt Cover, 61V (incl. #14) | X | |
| | 463176 | Belt Cover, LH 72V (inc.#14) | | X |
| | 463177 | Belt Cover, RH 72V (inc#14) | | X |
| 14 | 484368 | Cap, Spindle | X | X |
| 15 | 481625-01 | Knob w/Stud | X | X |
| 16 | 04001-136 | Bolt, Hex Head 3/8-16 x 1-1/2" Grade 8 | X | X |
| 17 | 04019-04 | Nut, Serrated Flange 3/8-16 | X | X |
| 18 | 48224 | Bearing | X | X |
| 19 | 461842 | Idler Arm Assy. (incl. #18) | X | X |
| 20 | 04001-22 | Bolt, Hex Head 3/8-16 x 2-3/4" | X | X |
| 21 | 43681 | Pivot, Idler | X | X |
| 22 | 48038 | Guide Roller | X | X |
| 23 | 45944 | Roller Shaft | X | X |
| 24 | 04117-01 | Nut, Lock w/ Flange 5/16-18 | X | X |
| 25 | 04001-09 | Bolt, Hex Head 5/16-18 x 1" | X | X |
| 26 | 04001-79 | Bolt, Hex Head 5/8-11 x 4-1/2" | X | X |
| 27 | 04021-13 | Nut, Elastic Stop 5/8-11 | X | X |
| 28 | 461516 | Pusharm Assy. | X | X |
| 29 | 428027 | Mounting Plate | X | X |
| 30 | 04001-154 | Bolt, Hex Head 5/16-18 x 4-3/4" | X | X |
| 31 | 04003-12 | Bolt, Carriage 5/16-18 x 3/4" | X | X |
| 32 | 04001-09 | Bolt, Hex Head 5/16-18 x 1" | X | X |
| 33 | 04030-03 | Lockwasher, 5/16" | X | X |
| 34 | 04040-15 | Flatwasher, 5/16-.375 x .875 x .083 | X | X |
| 35 | 482486 | Gearbox | X | X |
| 36 | 43763 | Spacer | X | X |
| 37 | 428026 | Mounting Plate | X | X |
| 38 | 04021-10 | Nut, Elastic Stop 5/16-18 | X | X |
| 39 | 04019-03 | Nut, Serr. Flange 5/16-18 | X | X |
| 40 | 451240 | Shaft Weldment, Pusharm | X | X |
| 41 | 04021-22 | Nut, Elastic Stop 5/16-18 Grade 8 | X | X |
| 42 | 04001-54 | Bolt, Hex Head 3/8-16 x 3" | X | X |
| 43 | 04001-51 | Bolt, Hex Head 3/8-16 x 3-3/4" | X | X |

| Ref. No. | Part No. | Description | 61 | 72 |
|---|---|---|---|---|
| 44 | 483176 | Pad, Deck Wear | X | |
| | 483174 | Pad, Deck Wear | | X |
| 45 | 461663 | Spindle Assembly (INCL 33,41,61) | X | X |
| 46 | 43589 | Shaft, Spindle | X | X |
| 47 | 481024 | Seal, Top | X | X |
| 48 | 481022 | Bearing Assembly | X | X |
| 49 | 48114-04 | Grease Fitting | X | X |
| 50 | 48677 | Relief Fitting, Tapered Spindle | X | X |
| 51 | 43644 | Spindle Housing | X | X |
| 52 | 43312 | Spacer, Outside | X | X |
| 53 | 43296 | Spacer, Inside | X | X |
| 54 | 481025 | Seal, Bottom | X | X |
| 55 | 43297 | Spindle Bushing, Bottom | X | X |
| 56 | 481035 | Nut, Special 1-1/16 - 18 | X | X |
| 57 | 04001-41 | Bolt, Hex Head 5/8-11 x 9-1/2 | X | X |
| 58 | 04043-06 | Flatwasher, 5/8-.688 x 1.75 x .134 HD | X | X |
| 59 | 482879 | Cutter Blade, 21" | | |
| | 482881 | Cutter Blade, 21" (31BV, 35BV, 37BV-EFI & 40BV-EFI) | | |
| | 482882 | Cutter Blade, 24-1/2" | | |
| 60 | 43590 | Spacer, Spindle Bottom | X | X |
| 61 | 04001-176 | Bolt, Hex Head 5/16-18 x 1-3/4" Grade 8 | X | X |
| 62 | 04063-08 | Key, 1/4 x 1/4 x 2" | X | X |
| 63 | 04040-04 | Flatwasher, 5/16-.344 x .688 x .065 | X | X |
| 64 | 04021-04 | Nut, Center Lock 5/16-18 | X | X |
| 65 | 04003-23 | Bolt, Carriage 3/8-16 x 1" | X | X |
| 66 | 424841 | Baffle, Custom Cut - 61V | X | |
| | 424917 | Baffle, Custom Cut - 72V | | X |
| 67 | 424209 | Baffle, Turbo - 61V | X | |
| | *425625 | Baffle, Turbo - 61V (CA) | X | |
| | 424856 | Baffle, Turbo - 72V | | X |
| | *423958 | Baffle, Turbo - 72V (CA) | | X |
| 68 | 482295 | Wheel, Anti-Scalp | | |
| 69 | 48100-15 | Bushing, .376 I.D. Oilite | X | X |
| 70 | 481632 | Anti-Scalp Wheel | X | X |
| 71 | 04021-05 | Nut, Center Lock 3/8-16 | X | X |
| 72 | 422478 | Bracket, Anti-Scalp | X | X |
| 73 | 04003-26 | Bolt, Carriage 3/8-16 x 4" | X | X |
| 74 | 04017-27 | Bolt, Hex Head Serr. Flange 3/8-16 x 1" | X | X |
| 75 | 461846 | Discharge Chute Assy. | X | |
| | *462477 | Discharge Chute Assy. (CA) | X | |
| | 462132 | Discharge Chute Assy. | | X |
| | *462478 | Discharge Chute Assy. (CA) | | X |
| 76 | 04001-12 | Bolt, Hex Head 5/16-18 x 1-3/4" | X | X |
| 77 | 483378 | Spring, Discharge Chute | X | X |
| 78 | 04001-154 | Bolt, Hex Head 5/16-18 x 4-3/4" | X | X |
| 79 | 04110-04 | U-Nut, 3/8-16 | X | X |
| 80 | 04003-42 | Bolt, Carriage 7/16-14 x 2-1/4" | X | X |
| 81 | 04021-11 | Nut, Elastic Stop 7/16-14 | X | X |
| 82 | 04110-03 | U-Nut, 3/8-16 (short) | X | X |
| 83 | 04107-04 | Bolt, Hex Head 3/8-16 x 2" Special | X | X |
| 84 | 485528 | Lever, Deck Level | X | X |
| 85 | 483704 | Spring | X | X |
| 86 | 04063-01 | Key, 1/4 x 1/4 x 1-1/4" | X | X |

* = California Models Only (not shown)

# STTII CUTTER DECK CONTROLS

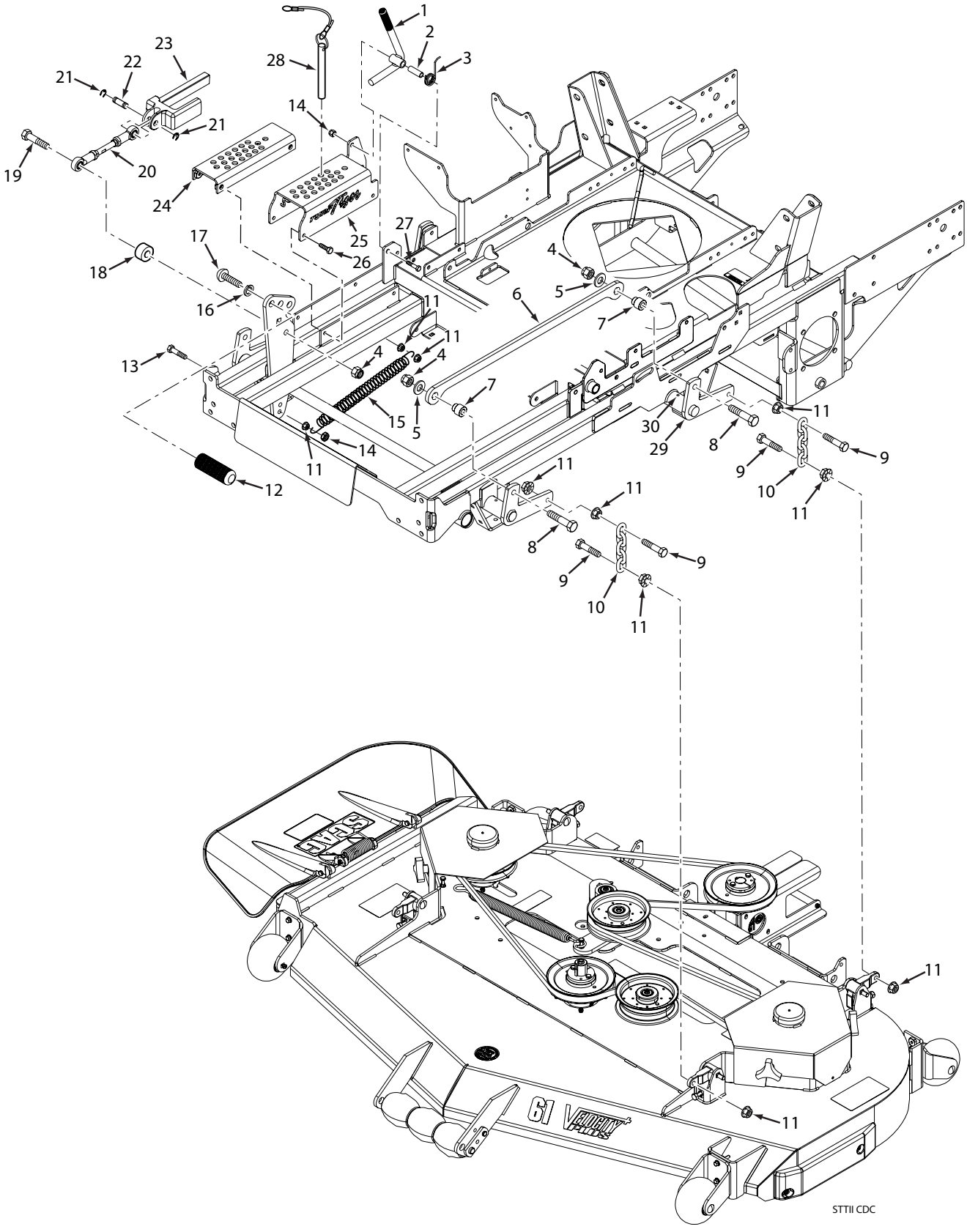

# STTII CUTTER DECK CONTROLS

| Ref. No. | Part No. | Description |
|---|---|---|
| 1 | 462856 | Deck Latch Weldment w/Grip |
| | 481477 | Grip |
| 2 | 43668 | Spacer, Deck Latch |
| 3 | 484191 | Spring, Torsion Lever Return |
| 4 | 04021-07 | Nut, Elastic Stop 1/2-13 |
| 5 | 04040-13 | Flatwasher, 1/2-.562 x 1.375 x .109 |
| 6 | 428108 | Link, Deck Lift |
| 7 | 431018 | Pivot, Deck Link |
| 8 | 04001-153 | Bolt, Hex Head 1/2-13 x 2-1/4" |
| 9 | 04001-20 | Bolt, Hex Head 3/8-16 x 1-1/2" |
| 10 | 48540 | Chain |
| 11 | 04019-04 | Nut, Serrated Flange 3/8-16 |
| 12 | 424504 | Pedal, Foot |
| 13 | 04001-136 | Bolt, Hex Head 3/8-16 x 1-1/2" Grade 8 |
| 14 | 04021-05 | Nut, Center Lock 3/8-16 |
| 15 | 486474 | Spring, Ext. Deck Lift |
| 16 | 04030-07 | Lockwasher, 5/8" |
| 17 | 04108-04 | Capscrew, 5/8-11 x 1-1/2" |
| 18 | 43508 | Spacer |
| 19 | 04001-72 | Bolt, Hex Head 1/2-13 x 2" |
| 20 | 482534 | Linkage, Deck Lift |
| 21 | 04050-18 | Retaining Ring, 1/2" Ext. "E" |
| 22 | 43487 | Pin, Deck Lift |
| 23 | 462872 | Slide Assembly (INCL. #20,21,22) |
| | 485570 | Slide, Height Adjust |
| 24 | 453099 | Weldment, Lower Cutting Height |
| 25 | 428237 | Adjustment Bracket, Cutting Height Upper |
| 26 | 04006-02 | Bolt, Hex Head 5/16-18 x 1-1/4" |
| | 04013-03 | Bolt, Hex Head 5/16-18 x 3/4" (Outside Rear) |
| | 04019-03 | Nut, Serrated Flange 5/16-18 (Outside Rear) |
| 27 | 04001-46 | Bolt, Hex Head 3/8-16 x 2-1/4" |
| 28 | 483345 | Ring Pin Assy., w/Lanyard |
| 29 | 452744 | Lift Bellcrank, LH Rear |
| | 452745 | Lift Bellcrank, RH Rear |
| * | 04041-14 | Flatwasher, 1", 1.062 x 1.5 x .0478 (Rear Bellcrank Mounting) |
| * | 04050-08 | Ret Ring 1" (Rear Bellcrank Mounting) |
| 30 | 48114-04 | Grease Fitting 1/4-28 Self Tap |

* = Item Not Shown

# STTII SHEET METAL COMPONENTS

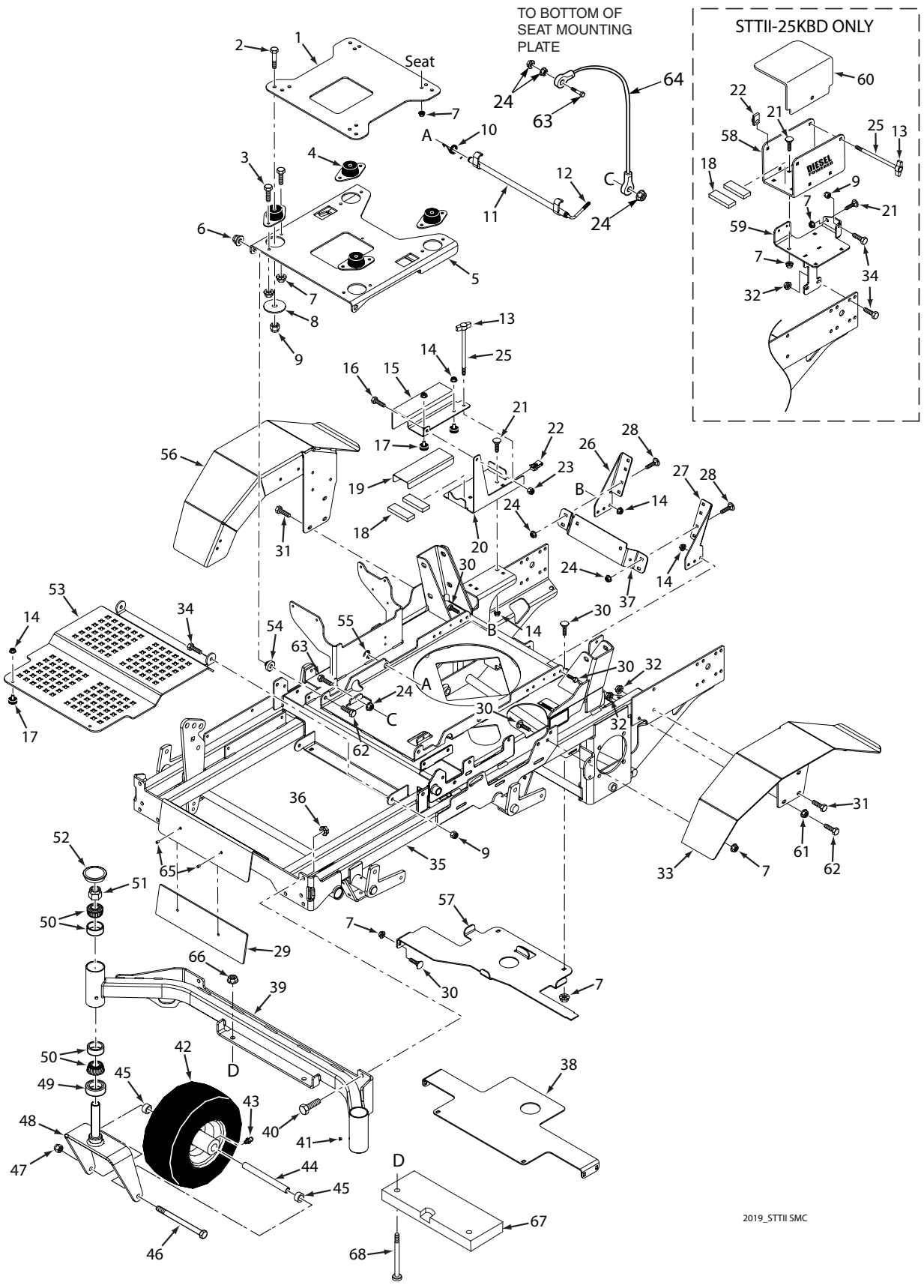

# STTII SHEET METAL COMPONENTS

| Ref. No. | Part No. | Description |
|---|---|---|
| 1 | 463224 | Mounting Plate, Seat w/Decal |
| 2 | 04001-46 | Bolt, Hex Head 3/8-16 x 2-1/4" |
| 3 | 04001-08 | Bolt, Hex Head 5/16-18 x 3/4" |
| 4 | 484148 | Isolator, Seat |
| 5 | 463225 | Seat Mounting Plate, Lower w/Decals |
| 6 | 04117-02 | Nut, Flange Elastic Stop Nut, 3/8-16 |
| 7 | 04019-03 | Nut, Serrated Flange 5/16-18 |
| 8 | 04041-38 | Flatwasher, 3/8-.406 x 2.25 x .1875 |
| 9 | 04021-09 | Nut, Elastic Stop 3/8-16 |
| 10 | 485599 | Spring, Seat Latch |
| 11 | 462841 | Lever Assy., Seat Release (incl. #12) |
| 12 | 484341 | Grip |
| 13 | 485698-01 | Knob, 1/4" Wing |
| 14 | 04019-03 | Nut, Serrated Flange 5/16-18 |
| 15 | 463232 | Cover, Battery Box w/ Decal (Gas & LP) |
| 16 | 04001-08 | Bolt, Hex Head 5/16-18 x 3/4" |
| 17 | 481284 | Bumper, Rubber |
| 18 | 48661 | Pad, Rubber |
| 19 | 485692 | Insulation, Battery Cover (Gas & LP Only) |
| 20 | 427098 | Battery Box (Gas & LP Only) |
| 21 | 04003-12 | Bolt, Carriage 5/16-18 x 3/4" |
| 22 | 04110-01 | U-Nut, 1/4-20 |
| 23 | 04021-10 | Nut, Elastic Stop 5/16-18 |
| 24 | 04019-02 | Nut, Serrated Flange 1/4-20 |
| 25 | 04001-221 | Bolt, Hex Head 1/4-20 x 8" |
| 26 | 428197 | Mounting Bracket, Cooler - RH |
| 27 | 428196 | Mounting Bracket, Cooler - LH |
| 28 | 04003-02 | Bolt, Carriage 1/4-20 x 3/4" |
| 29 | 428191 | Backing Plate |
| 30 | 04003-12 | Bolt, Carriage 5/16-18 x 3/4" |
| 31 | 04017-27 | Bolt, Hex Head Serrated Flange 3/8-16 x 1" |
| 32 | 04132-02 | Threaded Insert, 3/8-16 |
| 33 | 452733 | Fender, LH |
| 34 | 04001-19 | Bolt, Hex Head 3/8-16 x 1" |
| 35 | 463223 | Mainframe Assy., w/Decals |
| 36 | 04117-05 | Nut, 7/16-14 Flange Elastic Stop |
| 37 | 427051 | Bracket, Carbon Canister |
| | 428203 | Bracket, Carbon Canister (31DFI) |
| 38 | 428023 | Front Support, Fuel Tank |
| 39 | 453102 | Caster Support Weldment - 52V |
| | 453103 | Caster Support Weldment - 61V |
| | 453104 | Caster Support Weldment - 72V |
| 40 | 04001-28 | Bolt, Hex Head 7/16-14 x 1-1/4" |

| Ref. No. | Part No. | Description |
|---|---|---|
| 41 | 482028-01 | Plug, Grease Hole |
| 42 | 9278 | Wheel Assembly (incl. #43) |
| | 482621 | Bearing |
| | 482622 | Seal |
| 43 | 48114-07 | Grease Fitting |
| 44 | 43583 | Sleeve, Caster Wheel |
| 45 | 43584 | Spacer, Caster Wheel |
| 46 | 04001-167 | Bolt, Hex Head 1/2-13 x 9-1/2" |
| 47 | 04021-07 | Nut, Elastic Stop 1/2-13 |
| 48 | 453110 | Yoke Weldment |
| 49 | 481025 | Seal, 2" O.D. x 1.625 Bore |
| 50 | 48668 | Bearing Assembly |
| 51 | 04021-20 | Nut, Jam 1" - 14 |
| 52 | 484195 | Cap, Grease |
| 53 | 428025 | Foot Plate |
| 54 | 431013 | Sleeve, Seat Base Mounting |
| 55 | 04050-01 | Retaining Ring, .625 Ext. "E" |
| 56 | 452734 | Fender, RH |
| 57 | 428024 | Rear Support, Fuel Tank |
| 58 | 463320 | Battery Box w/Decal (Diesel Only) |
| 59 | 453112 | Battery Bracket Weldment (Diesel Only) |
| 60 | 428257 | Cover, Battery (Diesel Only) |
| | 481780 | Insulation, Battery Cover (Not Shown) |
| 61 | 04019-04 | Nut, Elastic Stop 3/8-16 |
| 62 | 04001-20 | Bolt, Hex Head 3/8-16 x 1-1/2" |
| 63 | 04001-59 | Bolt, Hex Head 1/4-20 x 1-1/4" |
| 64 | 48566 | Seat Stop Cable |
| 65 | 04090-03 | Pop Rivet, 3/16 x .402 |
| 66 | 04019-06 | Nut, Serrated Flange 1/2-13 |
| 67 | 41020 | Weight (x1 61V-26CH-EFI-LP & 72V-KBD) (x2 52V-26CH-EFI-LP & 61V-KBD) |
| 68 | 04014-06 | Capscrew, Hexsocket 1/2-13 x 4" |
| | 04001-52 | Capscrew, Hexhead 1/2-13 x 2.5" |

# STTII ROLL-OVER PROTECTION SYSTEM

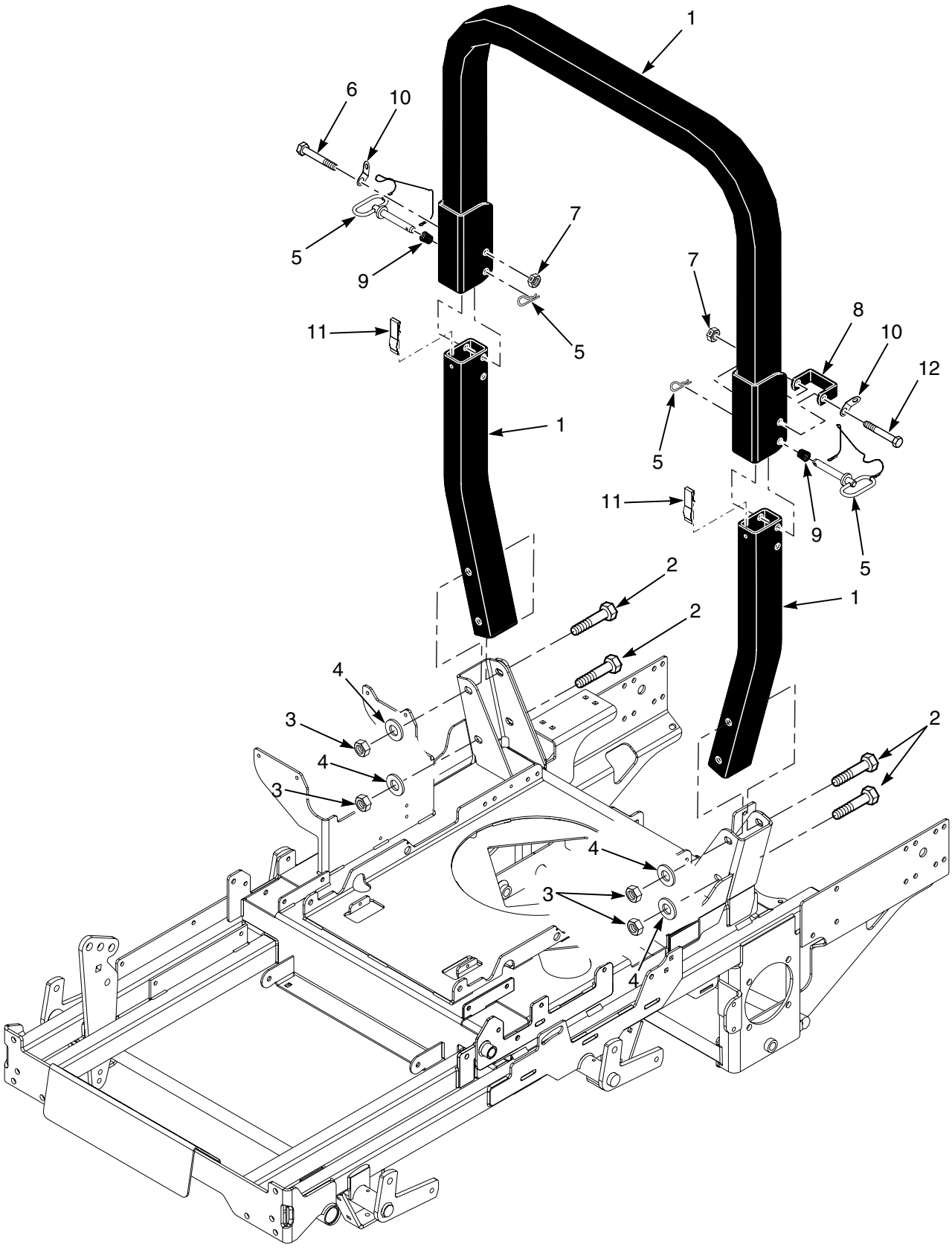

# STTII ROLL-OVER PROTECTION SYSTEM

| Ref. No. | Part No. | Description |
|---|---|---|
| 1 | 462210 | STT, ROPS Assembly |
| 2 | 04001-194 | Bolt, Hex Head 1/2-13 x 4-1/4" |
| 3 | 04021-19 | Nut, Center Lock 1/2-13 |
| 4 | 04040-13 | Flatwasher, 1/2-.562 x 1.375 x .109 |
| 5 | 484168 | Pin Assembly, ROPS Hinge (incl. #9, #10) |
| 6 | 04001-90 | Bolt, Hex Head 1/2-13 x 3-1/4" |
| 7 | 04021-07 | Nut, Elastic Stop 1/2-13 |
| 8 | 426952 | Stop, ROPS |
| 9 | 484170 | Spring, ROPS |
| 10 | 484169 | Clip, ROPS |
| 11 | 484167 | Spring, ROPS |
| 12 | 04001-163 | Bolt, Hex Head 1/2-13 x 3-3/4" |

# STTII SUSPENSION SEAT

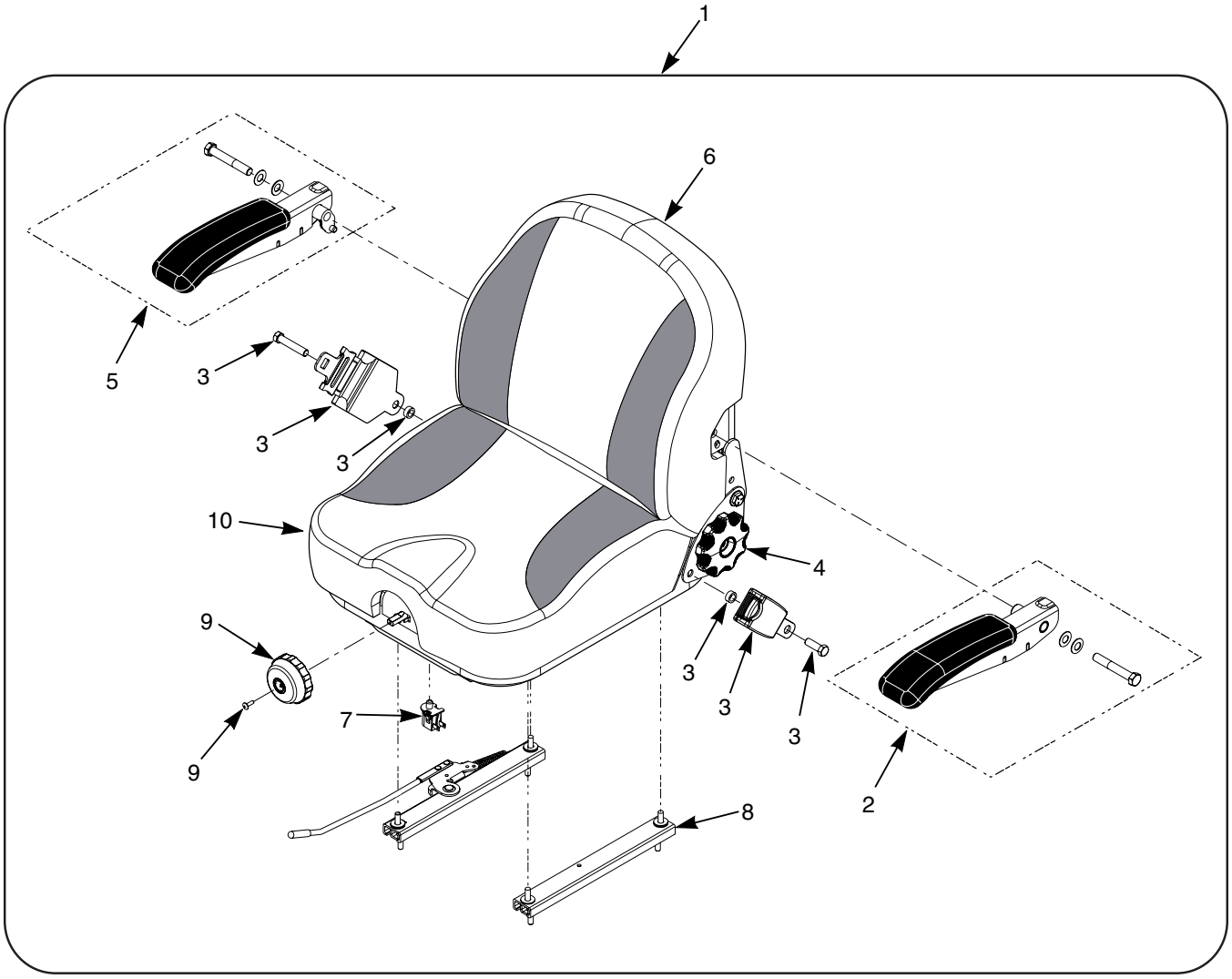

# STTII SUSPENSION SEAT

| Ref. No. | Part No. | Description |
|---|---|---|
| 1 | 486591 | Suspension Seat Assembly w/seat belt |
| 2 | 484709 | Armrest Kit, LH |
| 3 | 484717 | Seat Belt Kit |
| 4 | 485652 | Recliner Knob Kit |
| 5 | 484710 | Armrest Kit, RH |
| 6 | 486596 | Cover, Back Cushion |
| 7 | 481638 | Seat Switch |
| 8 | 485594 | Track Kit, (Includes Handle Kit p/n 485717) |
| 9 | 484714 | Suspension Knob Kit |
| 10 | 486597 | Cover, Seat Cushion |
| 11 | *484719 | Bellows (Track Cover) |

* = Item Not Shown

# STTII DECK DRIVE COMPONENTS

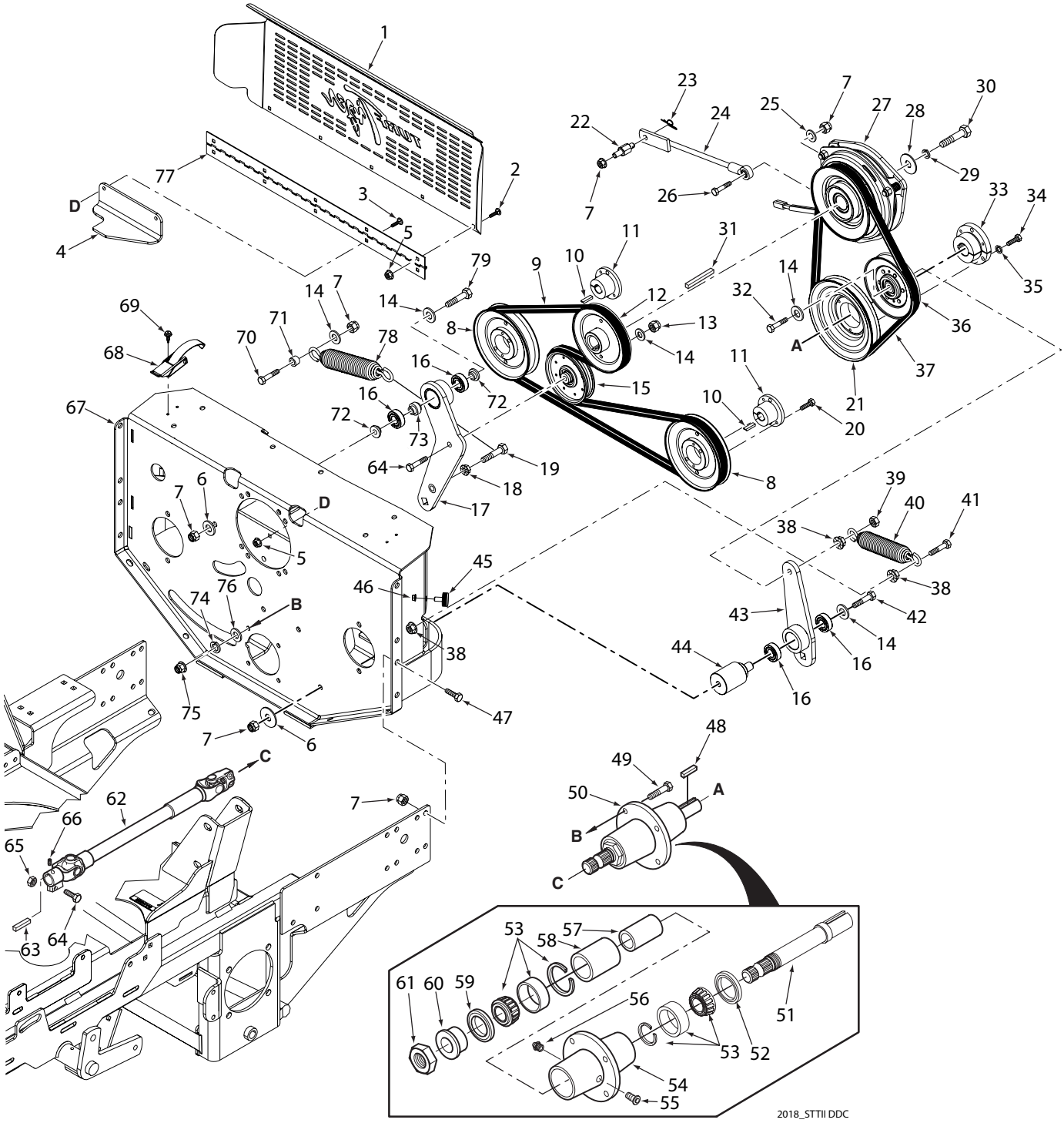

# STTII DECK DRIVE COMPONENTS

| Ref. No. | Part No. | Description |
|---|---|---|
| 1 | 427106 | Cover, Rear |
| 2 | 04003-07 | Bolt, Carriage 1/4-20 x 1/2" |
| 3 | 04003-02 | Bolt, Carriage 1/4-20 x 3/4" |
| 4 | 425214 | Bracket, Idler Stop |
| 5 | 04019-02 | Nut, Serrated Flange 1/4-20 |
| 6 | 04041-11 | Flatwasher, 3/8-.406 x 1.50 x 7 Gauge |
| 7 | 04021-09 | Nut, Elastic Stop 3/8-16 |
| 8 | 482744 | Pulley, 5.75 O.D. (Gas & LP Engines) |
| | 482745 | Pulley, 6.35 O.D. (Diesel Engine) |
| 9 | 485909 | Belt, STTII Pump Drive (Gas & LP Engines) |
| | 485928 | Belt, STTII Pump Drive (Diesel Engine) |
| 10 | 04063-27 | Key, 5mm x 5mm x 30mm |
| 11 | 481884 | Tapered Hub, 17mm Bore |
| 12 | 483675 | Pulley, 5.67 O.D. (Kawasaki & Kohler Only) |
| | 485867 | Pulley, 5.67 O.D. (31BV,35BV & 37BV-EFI Only) |
| | 483829 | Pulley, 5.67 O.D (Kubota Diesel Only) |
| 13 | 04021-05 | Nut, Center Lock 3/8-16 |
| 14 | 04043-04 | Flatwasher, 3/8-.391 x .938 x .105 HD |
| 15 | 483214 | Pulley, Idler 4" |
| 16 | 48224 | Bearing |
| 17 | 462989 | Idler Arm Assy. (incl. #16 & #73) |
| 18 | 04019-06 | Nut, Serrated Flange 1/2-13 |
| 19 | 04001-185 | Bolt, Hex Head 1/2-13 x 2" Grade 8 |
| 20 | 04001-172 | Bolt, Hex Head 1/4-20 x 1" Grade 8 |
| 21 | 482949 | Pulley, 6.70 O.D. |
| 22 | 43651 | Stud, Anti-Rotation |
| 23 | 04069-01 | Pin, Rue Cotter |
| 24 | 482845 | Rod Assembly |
| 25 | 04040-12 | Flatwasher, 3/8-.438 x 1.00 x .083 |
| 26 | 04001-32 | Bolt, Hex Head 3/8-16 x 1-1/4" |
| 27 | 461661 | Clutch Assembly, GT3.5 |
| | 462011 | Clutch Assembly, GT3.5 (Diesel Engine) |
| | 461826 | Clutch Assembly, GT5 (31BV,35BV & 37BV-EFI) |
| 28 | 04041-28 | Flatwasher, 7/16-.469 x 1.50 x .1793 |
| 29 | 04030-05 | Lockwasher, 7/16" |
| 30 | 04102-04 | Bolt, Hex Head 7/16-20 x 2-1/2" (Kohler) |
| | 04102-03 | Bolt, Hex Head 7/16-20 x 2-1/4" (31BV,35BV & 37 BV-EFI) |
| | 04102-03 | Bolt, Hex Head 7/16-20 x 2-1/4" (Kubota) |
| | 04103-02 | Bolt, Hex Head M10-1.5 x 50 (Kawasaki) |
| 31 | 04063-23 | Key, 1/4 x 1/4 x 3-1/4" |
| 32 | 04001-170 | Bolt, Hex Head 3/8-16 x 2-1/2" Grade 8 |
| 33 | 481536 | Tapered Hub, 1" Bore |
| 34 | 04001-109 | Bolt, Hex Head 1/4-20 x 1.375 Full Thread |
| 35 | 04030-02 | Lockwasher, 1/4" |
| 36 | 48181 | Pulley, Idler |
| 37 | 482876 | Belt, Deck Drive |
| 38 | 04019-04 | Nut, Serrated Flange 3/8-16 |
| 39 | 04021-05 | Nut, Center Lock 3/8-16 |
| 40 | 484754 | Spring, PTO (Gas & LP Engines) |
| | 483430 | Spring, PTO (Diesel Engine) |
| 41 | 04001-136 | Bolt, Hex Head 3/8-16 x 1-1/2" Grade 8 |
| 42 | 04001-171 | Bolt, Hex Head 3/8-16 x 4-1/2" |
| 43 | 461609 | Idler Arm Assy., PTO Drive (incl. #16) |
| 44 | 43632 | Pivot, Idler - PTO |
| 45 | 481284 | Bumper, Rubber |

| Ref. No. | Part No. | Description |
|---|---|---|
| 46 | 04019-03 | Nut, Serrated Flange 5/16-18 |
| 47 | 04001-19 | Bolt, Hex Head 3/8-16 x 1" |
| 48 | 04063-06 | Key, 1/4 x 1/4 x 1-1/2" |
| 49 | 04001-176 | Bolt, Hex Head 5/16-18 x 1-3/4" Grade 8 |
| 50 | 461697 | Spindle Assy., PTO |
| 51 | 43534 | Shaft, Deck Drive |
| 52 | 481024 | Seal |
| 53 | 481022 | Bearing Assembly, Tapered |
| 54 | 43644 | Spindle Housing |
| 55 | 48677 | Relief Fitting |
| 56 | 48114-04 | Grease Fitting, 1/4-28 |
| 57 | 43296 | Spacer, Inside |
| 58 | 43312 | Spacer, Outside |
| 59 | 481025 | Seal, 2" O.D. x 1.625 Bore |
| 60 | 43297 | Spindle Bushing, Bottom |
| 61 | 481035 | Nut, 1.06 - 18 |
| 62 | 482424 | Driveshaft |
| 63 | 04063-20 | Key, 1/4 x 1/4 x 1" |
| 64 | 04001-21 | Bolt, Hex Head 3/8-16 x 1-3/4" |
| 65 | 04021-05 | Nut, Center Lock 3/8-16 |
| 66 | 04012-06 | Set Screw, 3/8-16 x 1/2" Internal Hex |
| 67 | 452864 | Pump Mounting Plate Weldment (Gas & LP) |
| | 452886 | Pump Mounting Plate Weldment (Diesel) |
| 68 | 481309 | Latch, Hood |
| 69 | 04011-11 | Screw, #10-32 x .563 Shakeproof |
| 70 | 04001-20 | Bolt, Hex Head 3/8-16 x 1-1/2" |
| 71 | 431051 | Spacer, Spring Anchor |
| 72 | 431049 | Spacer, Controls |
| 73 | 431050 | Spacer, Bearing |
| 74 | 04030-03 | Lockwasher, 5/16" |
| 75 | 04021-22 | Nut, Elastic Stop 5/16-18 Grade 8 |
| 76 | 04040-15 | Flatwasher, 5/16-.375 x .875 x .083 |
| 77 | 481531 | Hinge, Belt Cover |
| 78 | 484754 | Spring Pump Drive |
| 79 | 04001-22 | Bolt, Hex Head 3/8-16 x 2-3/4" |

# STTII ENGINE AND ATTACHING PARTS - AIR COOLED ( GASOLINE)

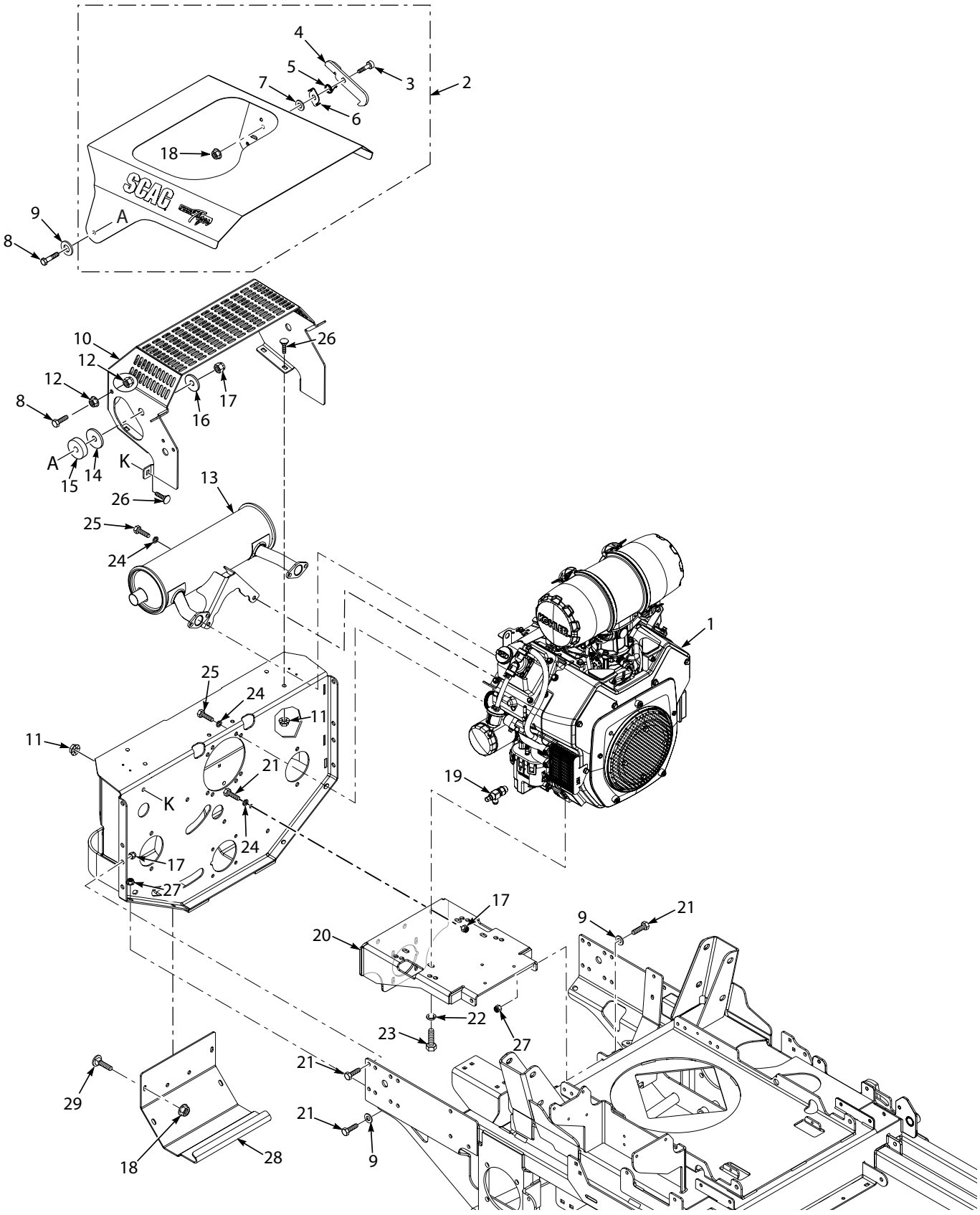

# STTII ENGINE AND ATTACHING PARTS - AIR COOLED (GASOLINE)

| Ref. No. | Part No. | Description |
|---|---|---|
| 1 | 486522* | Engine, 31BV - Briggs & Stratton |
| | 484238* | Engine, 35BV - Briggs & Stratton |
| | 485894* | Engine, 37BV-EFI - Briggs & Stratton |
| 2 | 462848 | Hood Assy., STTII (31&35BV) |
| | 462963 | Hood Assy., STTII (37BV-EFI) |
| 3 | 04009-07 | Bolt, Shoulder 3/8-1/2 |
| 4 | 424633 | Latch, Hood |
| 5 | 483507 | Spring, Hood |
| 6 | 424634 | Lock, Hood |
| 7 | 04040-05 | Flatwasher, 3/8-.406 x .812 x .065 |
| 8 | 04001-21 | Bolt, Hex Head 3/8-16 x 1-3/4" |
| 9 | 04041-07 | Flatwasher, 3/8-.391 x .938 x .105 |
| 10 | 427561 | Guard, Muffler |
| 11 | 04117-01 | Nut, Elastic Stop Flange, 5/16-18 |
| 12 | 04019-04 | Nut, Serrated Flange 3/8-16 |
| 13 | ** | Muffler, 31BV - Briggs & Stratton |
| | ** | Muffler, 35BV - Briggs & Stratton |
| | ** | Muffler, 37BV-EFI - Briggs & Stratton |
| 14 | 483471 | Disc, Anti-Friction |
| 15 | 43740 | Spacer, Hood |
| 16 | 04041-11 | Flatwasher, 3/8-.406 x 1.50 x 7 Gauge |
| 17 | 04021-09 | Nut, Elastic Stop 3/8-16 |
| 18 | 04019-03 | Nut, Serrated Flange 5/16-18 |
| 19 | 483017 | Oil Drain, 31BV, 35BV & 37BV-EFI - Briggs & Stratton |
| 20 | 452726 | Plate Weldment, Engine Mounting |
| 21 | 04001-19 | Bolt, Hex Head 3/8-16 x 1" |
| 22 | 04030-04 | Lockwasher, 3/8 |
| | 04040-15 | Flatwasher, 5/16-.375 x .875 x .083 (31BV,35BV & 37BV-EFI) |
| 23 | 04001-17 | Bolt, Hex Head 5/16-18 x 2-1/2" (x3) (31BV,35BV & 37BV-EFI) |
| | 04001-53 | Bolt, Hex Head 5/16-18 x 2-1/2" (31BV,35BV & 37BV-EFI) |
| | 04021-22 | Nut, Elastic Stop, 5/16-18 (x3) (31BV,35BV & 37BV-EFI) |
| | 04019-03 | Nut, Serrated Flange 5/16-18 (31BV,35BV & 37BV-EFI) |
| 24 | 04030-04 | Lockwasher, 3/8" |
| 25 | 04001-19 | Bolt, Hex Head 3/16-1" |
| 26 | 04003-12 | Bolt, Carriage 5/16-18 x 3/4" |
| 27 | 04117-02 | Nut, Elastic Stop Flange 3/8-16 |
| 28 | 427071 | Cover, Rear |
| 29 | 04003-12 | Bolt, Carriage 5/16-18 x 3/4" |

* Not available through Scag.

** Available through the individual engine manufacturer.

# STTII ENGINE & ATTACHING PARTS - LIQUID COOLED (GASOLINE)

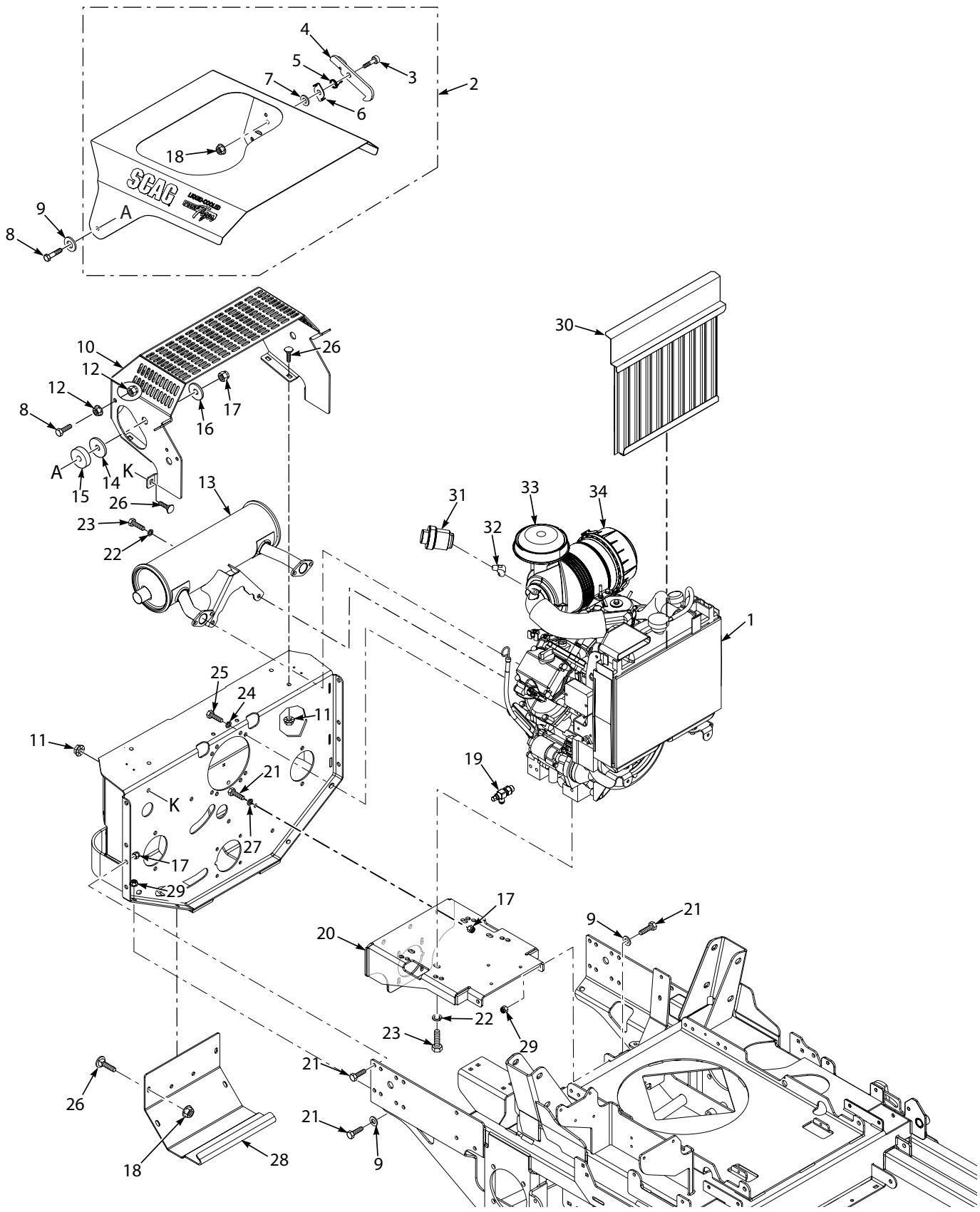

# STTII ENGINE & ATTACHING PARTS - LIQUID COOLED (GASOLINE)

| Ref. No. | Part No. | Description |
|---|---|---|
| 1 | 485395* | Engine, FD851 - Kawasaki |
| 2 | 462904 | Hood Assy., STTII (FD851) - Fuel Injected |
| 3 | 04009-07 | Bolt, Shoulder 3/8 x 1/2 |
| 4 | 424633 | Latch, Hood |
| 5 | 483507 | Spring, Hood Latch |
| 6 | 424634 | Lock, Hood Latch |
| 7 | 04040-05 | Flatwasher, 3/8-.406 x .812 x .065 |
| 8 | 04001-21 | Bolt, Hex Head 3/8-16 x 1-3/4" |
| 9 | 04041-07 | Flatwasher, 3/8-.406 x .812 x .065 |
| 10 | 427561 | Guard, Muffler |
| 11 | 04117-01 | Nut, Elastic Stop Flange, 5/16-18 |
| 12 | 04019-04 | Nut, Serrated Flange 3/8-16 |
| 13 | 482699 | Muffler, Kawasaki |
| 14 | 483471 | Disc, Anti-Friction |
| 15 | 43740 | Spacer, Hood |
| 16 | 04041-11 | Flatwasher, 3/8-.406 x 1.50 x 7 Gauge |
| 17 | 04021-09 | Nut, Elastic Stop 3/8-16 |
| 18 | 04019-03 | Nut, Serrated Flange 5/16-18 |
| 19 | 482351 | Oil Drain, Kawasaki |
| 20 | 452726 | Plate Weldment, Engine Mount |
| 21 | 04001-19 | Bolt, Hex Head 3/8-16 x 1" |
| 22 | 04030-05 | Lockwasher, 7/16 |
| 23 | 04002-18 | Bolt, Hex Head M10-1.5 x 25 Full Thread |
| 24 | 04030-03 | Lockwasher, 5/16 |
| 25 | 04002-12 | Bolt, Hex Head M8-1.25 x 20 |
| 26 | 04003-12 | Bolt, Carriage 5/16-18 x 3/4" |
| 27 | 04030-04 | Lockwasher, 3/8 |
| 28 | 427071 | Cover, Rear |
| 29 | 04117-02 | Nut, Elastic Stop Flange 3/8-16 |
| 30 | 452243 | Screen Weldment, Radiator |
| 31 | 485760 | Gauge, Pressure Indicator |
| 32 | 483517-01 | Elbow, 90 Degree |
| 33 | 485759 | Rain Bonnet |
| 34 | 482914 | Air Cleaner Assy. KA/DFI (INCL. 31,32,33) |

* Not available through Scag.

# STTII ENGINE & ATTACHING PARTS - KOHLER 25CH-LP-EFI

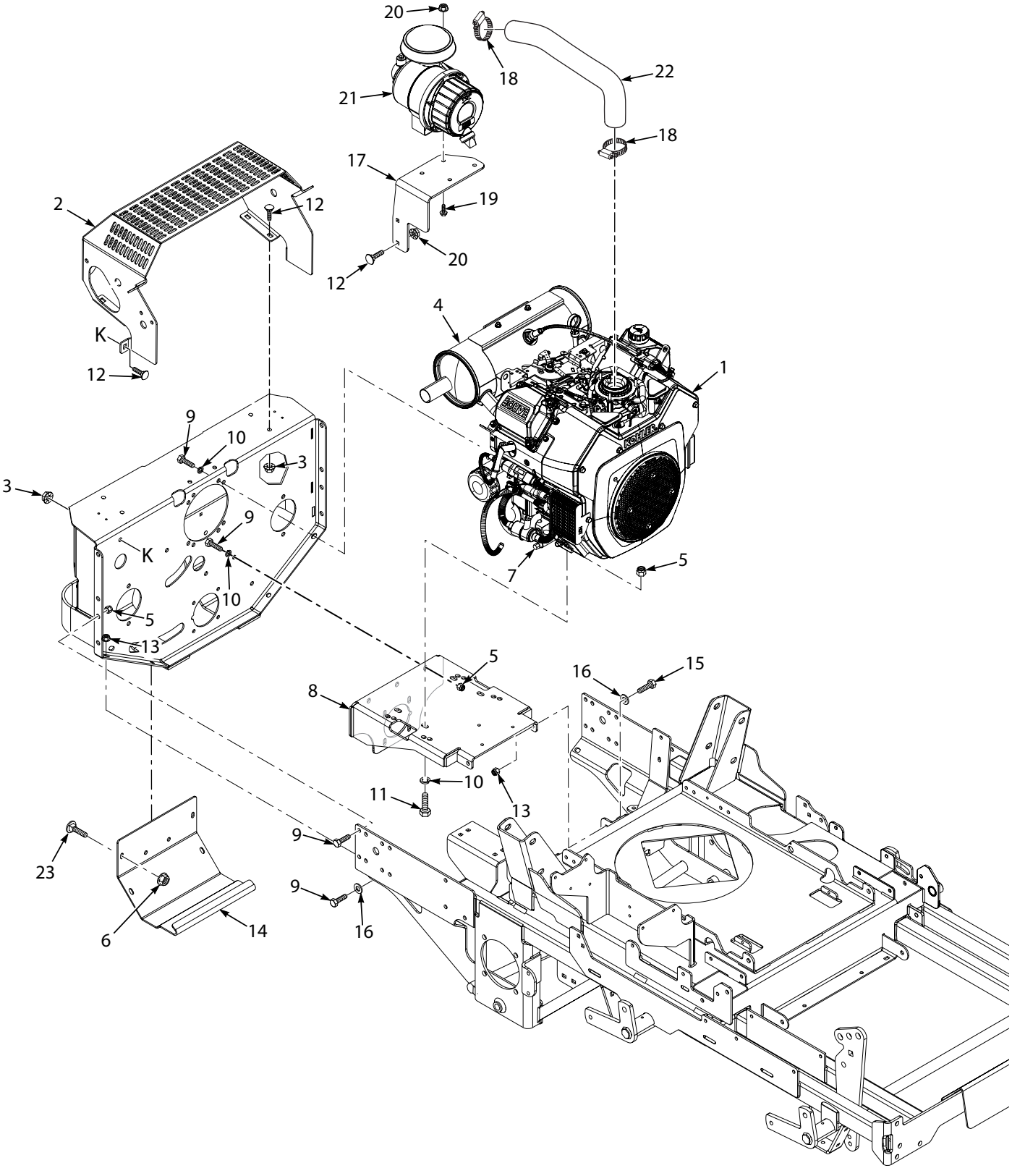

# STTII ENGINE & ATTACHING PARTS - KOHLER 25CH-LP-EFI

| Ref. No. | Part No. | Description |
|---|---|---|
| 1 | 485380* | Engine, 25 LP-EFI - Kohler |
| 2 | 427561 | Guard, Muffler |
| 3 | 04117-01 | Nut, Flange Elastic Stop Nut, 5/16-18 |
| 4 | ** | Muffler, 25 LP-EFI - Kohler |
| 5 | 04021-09 | Nut, Elastic Stop 3/8-16 |
| 6 | 04019-03 | Nut, Serr. Flng. 5/16-18 |
| 7 | ** | Oil Drain, Kohler 25 LP-EFI |
| 8 | 452726 | Plate Weldment, Engine Mounting |
| 9 | 04001-19 | Bolt, Hex Head 3/8-16 x 1" |
| 10 | 04030-04 | Lockwasher, 3/8" |
| 11 | 04001-21 | Bolt, Hex Head 3/8-16 x 1-3/4" |
| 12 | 04003-12 | Bolt, Carriage 5/16-18 x 3/4" |
| 13 | 04117-02 | Nut, Elastic Stop Flange 3/8-16 |
| 14 | 427071 | Cover, Rear |
| 15 | 04001-32 | Bolt, Hex Head 3/8-16 x 1-1/4" |
| 16 | 04041-07 | Flatwasher, 3/8-.391 x .938 x .105 |
| 17 | 427909 | Bracket, Air Cleaner Mount |
| 18 | 48136-25 | Clamp, 2-3/4" Max. Dia. |
| 19 | 04017-17 | Bolt, Hex Head Serr. Flng 5/16-18 x 1" |
| 20 | 04019-03 | Nut, Serr. Flng. 5/16-18 |
| 21 | ** | Air Filter Assembly |
| 22 | 486043 | Hose, Air Intake |
| 23 | 04003-07 | Bolt, Carriage 1/4-20 x 1/2" |

* Not available through Scag.
** Available through the engine manufacturer.

# STTII ENGINE & ATTACHING PARTS - KUBOTA DIESEL

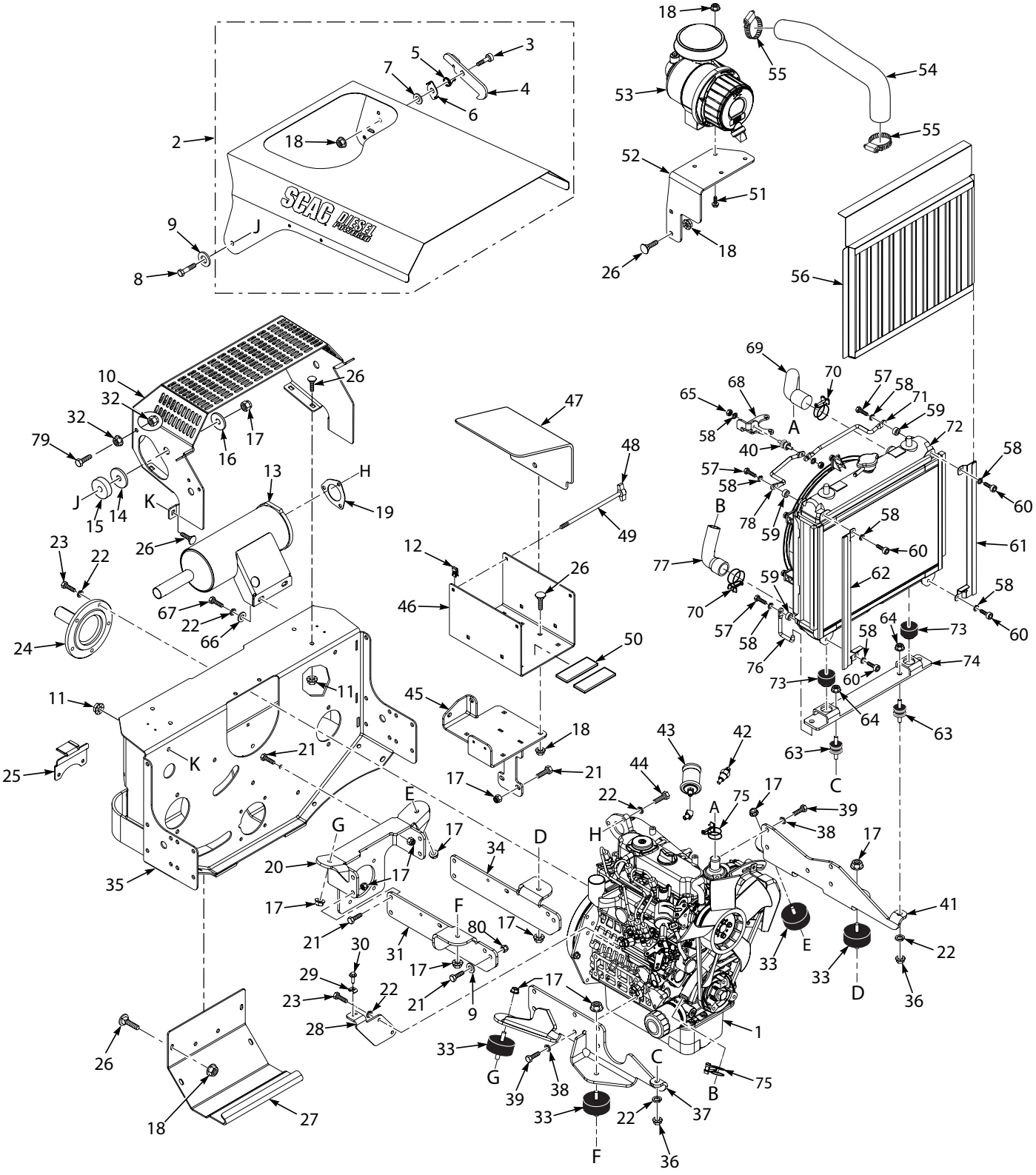

# STTII ENGINE & ATTACHING PARTS - KUBOTA DIESEL

| Ref. No. | Part No. | Description |
|---|---|---|
| 1 | 485749* | Engine, D902 - Kubota |
| 2 | 462917 | Hood Assy., STTII (Kubota Diesel) |
| 3 | 04009-07 | Bolt, Shoulder 5/16-18 x 1/2" |
| 4 | 424633 | Latch, Hood |
| 5 | 483507 | Spring, Hood Latch |
| 6 | 424634 | Lock, Hood Latch |
| 7 | 04040-05 | Flatwasher, 3/8-.406 x .812 x .065 |
| 8 | 04001-21 | Bolt, Hex Head, 3/8-16 x 1-3/4" |
| 9 | 04041-07 | Flatwasher, 3/8-.391 x .938 x .105 |
| 10 | 427561 | Guard, Muffler |
| 11 | 04117-01 | Nut, Flange Elastic Stop Nut, 5/16-18 |
| 12 | 04110-01 | U-Nut 1/4-20 |
| 13 | 483811 | Muffler, Kubota |
| 14 | 483471 | Disc, Anti-Friction |
| 15 | 43740 | Spacer, Hood |
| 16 | 04041-11 | Flatwasher, 3/8 (.406 x 1.50 x 7 Ga.) |
| 17 | 04021-09 | Nut, Elastic Stop 3/8-16 |
| 18 | 04019-03 | Nut, Serr. Flng. 5/16-18 |
| 19 | 483387 | Gasket, Muffler |
| 20 | 424452 | Plate, Rear Engine Mount |
| 21 | 04001-19 | Bolt, Hex Hd. 3/8-16 x 1" |
| 22 | 04030-03 | Lockwasher, 5/16" Spring |
| 23 | 04002-12 | Bolt, Metric Hex Hd. M8-1.25 x 20mm |
| 24 | 482334 | Stub Shaft, (Kubota) |
| 25 | 426054 | Bracket, Belt Guide |
| 26 | 04003-12 | Bolt, Carriage 5/16-18 x 3/4" |
| 27 | 427071 | Cover, Rear |
| 28 | 424485 | Bracket, Control Mount |
| 29 | 424580 | Clamp |
| 30 | 04011-06 | Screw, Self Tapping |
| 31 | 427137 | Plate, Engine Mount RH |
| 32 | 04019-04 | Nut, Serr. Flng. 5/16-18 |
| 33 | 483351 | ISO Mount |
| 34 | 427136 | Plate, Engine Mount LH |
| 35 | 452886 | Pump Mounting Plate Weldment |
| 36 | 04025-02 | Nut, Metric Hex M8-1.25mm |
| 37 | 452792 | Mounting Bracket Weldment RH |
| 38 | 04030-05 | Lockwasher, 7/16" Spring |
| 39 | 04002-10 | Bolt, Metric Hex Hd. M10-1.25 x 25mm |
| 40 | 484069 | ISO Mount, Upper Radiator |
| 41 | 452791 | Mounting Bracket Weldment LH |
| 42 | 483360 | Sender Unit, Water Temperature |
| 43 | 481811 | Sender Unit, Oil Pressure |
| 44 | 04002-01 | Bolt, Metric Hex Hd. M8-1.25 x 30mm |
| 45 | 453112 | Battery Bracket Weldment |

| Ref. No. | Part No. | Description |
|---|---|---|
| 46 | 463320 | Battery Box w/Decal |
| 47 | 428257 | Cover, Battery |
| | 481780 | Insulation, Battery Cover (Not Shown) |
| 48 | 485698-01 | Knob, 1/4" Wing |
| 49 | 04001-221 | Bolt, Hex Head 1/4-20 x 8" |
| 50 | 48661 | Rubber Pad |
| 51 | 04017-17 | Bolt, Hex Head Serr. Flng 5/16-18 x 1" |
| 52 | 427140 | Bracket, Air Cleaner Mount |
| 53 | 485322 | Air Filter Assembly (Enginaire p/n 67150) |
| 54 | 484697 | Hose, Air Intake |
| 55 | 48136-25 | Clamp, 2-3/4" Max. Dia. |
| 56 | 462412 | Debris Screen Assembly (With Upper Foam) |
| 57 | 04002-20 | Bolt, Metric Hex Hd. M6-1.0 x 30mm |
| 58 | 04030-02 | Lockwasher, 1/4" Spring |
| 59 | 43714 | Spacer, Radiator |
| 60 | 04106-01 | Capscrew, Metric M6-1.0 x 16mm |
| 61 | 424623 | Debris Screen Track RH |
| 62 | 424624 | Debris Screen Track LH |
| 63 | 483928 | ISO Mount, Lower Radiator |
| 64 | 04111-04 | Nut, Metric Serr. Flng. M8 x 1.25 |
| 65 | 04025-01 | Nut, Metric Hex M6 x 1 |
| 66 | 04040-04 | Flatwasher, SAE 5/16 (.344 x .688 x .065") |
| 67 | 04002-03 | Bolt, Metric Hex Hd. M8-1.25 x 25mm |
| 68 | ** | Mount, Hose - (Kubota p/n 1G930-72191) |
| 69 | ** | Hose, Upper - (Kubota p/n 1G952-72851) |
| 70 | ** | Clamp, Large - (Kubota p/n 09318-89030) |
| 71 | ** | Brace, LH - (Kubota p/n1G960-72141) |
| 72 | ** | Radiator Assy - (Kubota p/n 1G952-72001) Includes Items #40, #63 and #68 thru #78 |
| 73 | ** | Cushion, Radiator - (Kubota p/n 1G952-72181) |
| 74 | ** | Brkt, Rad Mount - (Kubota p/n 1G952-72151) |
| 75 | ** | Clamp, Small - (Kubota p/n 09318-89039) |
| 76 | ** | Mount, Lwr Rad - (Kubota p/n 1G952-30821) |
| 77 | ** | Hose, Lower - (Kubota p/n 1G952-72941) |
| 78 | ** | Brace, RH - (Kubota p/n 1G960-72131) |
| 79 | 04001-21 | Bolt, Hex Head, 3/8-16 x 1-3/4" |
| 80 | 04117-02 | Nut, Elastic Stop Flange, 3/8-16 |

* Not available through Scag.

** Available through the engine manufacturer.

# STTII BRAKE COMPONENTS

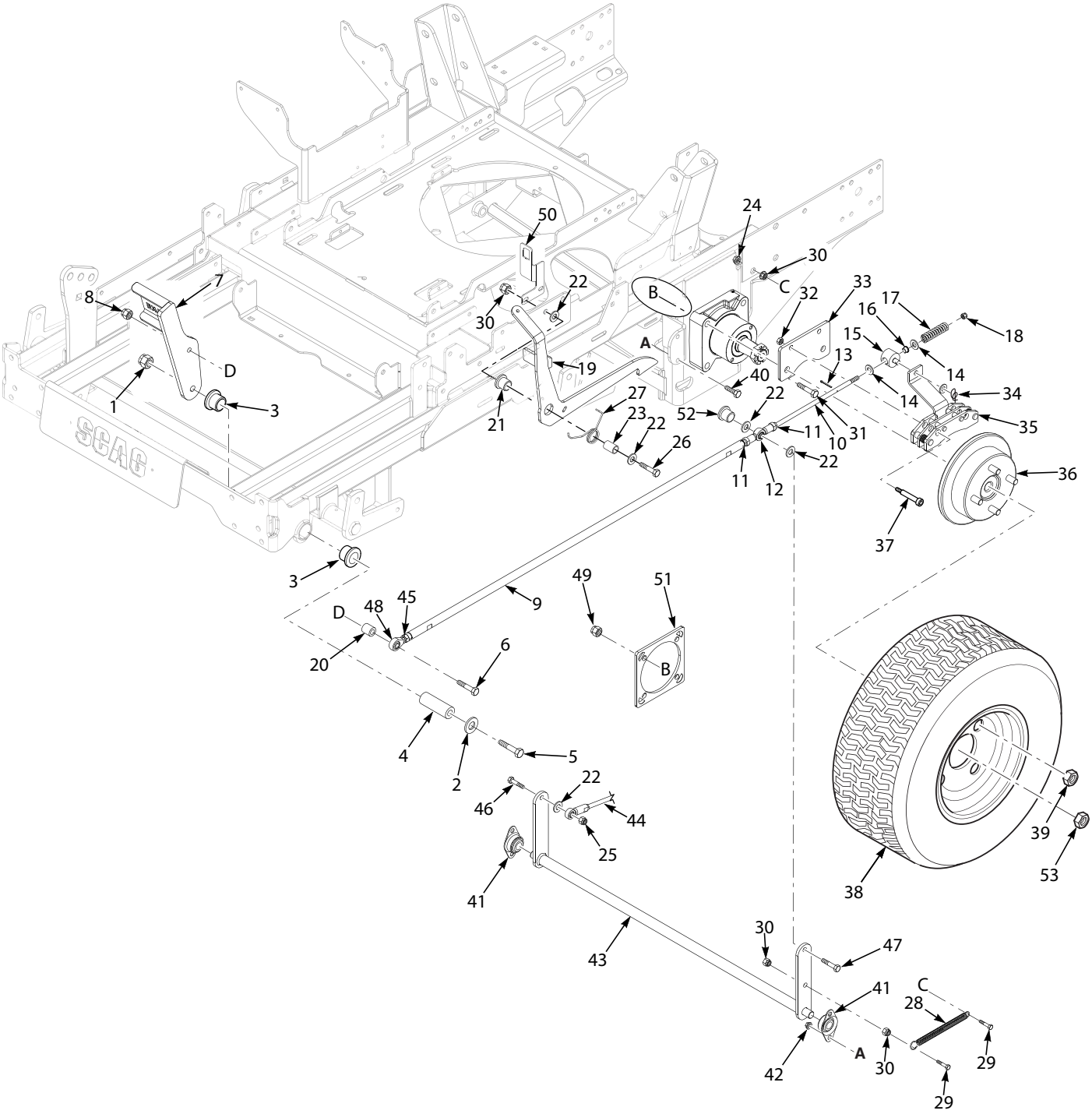

# STTII BRAKE COMPONENTS

| Ref. No. | Part No. | Description |
|---|---|---|
| 1 | 04021-07 | Nut, Elastic Stop 1/2-13 |
| 2 | 04040-13 | Flatwasher, 1/2-.562 x 1.375 x .109 |
| 3 | 483453-03 | Bearing |
| 4 | 43872 | Sleeve, Brake Pivot |
| 5 | 04001-194 | Bolt, Hex Head 1/2-13 x 4-1/4" |
| 6 | 04001-22 | Bolt, Hex Head 3/8-16 x 2-3/4" |
| 7 | 453055 | Foot Pedal, Brake |
| 8 | 04021-09 | Nut, Elastic Stop 3/8-16 |
| 9 | 486523 | Link, Brake |
| 10 | 486524 | Linkage Assy., LH Brake (incl. #9, 11 - 18,45,48) |
| 11 | 04020-25 | Nut, Jam 3/8-24 UNF |
| 12 | 486491 | Rod End w/Trunion |
| 13 | 04061-02 | Cotter Pin, 3/32 x .75 |
| 14 | 04040-05 | Flatwasher, 3/8-.406 x .812 x .065 |
| 15 | 462452 | Swivel Assy., Brake (incl. #16) |
| 16 | 483453-23 | Bearing |
| 17 | 484535 | Spring, Brake |
| 18 | 04021-18 | Nut, Elastic Stop 3/8-24 Grade 8 |
| 19 | 463174 | Brake Handle w/Grip (includes #21) |
| | 481548 | Grip |
| 20 | 43572 | Spacer |
| 21 | 483453-14 | Bearing |
| 22 | 04041-07 | Flatwasher, 3/8-.391 x .938 x .105 |
| 23 | 431105 | Pivot, Brake Lever |
| 24 | 04132-02 | Threaded Insert, 3/8-16 |
| 25 | 04021-05 | Nut, Center Lock 3/8-16 |
| 26 | 04001-31 | Bolt, Hex Head 3/8-16 x 2-1/2" |
| 27 | 486485 | Spring, Torsion, Brake Handle |
| 28 | 485831 | Spring, Brake Return |
| 29 | 04001-136 | Bolt, Hex Head 3/8-16 x 1-1/2" Grade 8 |
| 30 | 04019-04 | Nut, Serrated Flange 3/8-16 |

| Ref. No. | Part No. | Description |
|---|---|---|
| 31 | 04001-190 | Bolt, Hex Head 1/2-13 x 2-3/4" |
| 32 | 04021-05 | Nut, Serrated Flange 3/8-16 |
| 33 | 426983 | Mounting Bracket, Brakes |
| 34 | 04069-01 | Pin, Rue Cotter - 3/8 |
| 35 | 485595 | Brake Caliper |
| 36 | 462808 | Wheel Hub w/Disc |
| 37 | 04009-10 | Bolt, Shoulder 1/2", 3/8-16 x 2-3/4" |
| 38 | 485607 | Wheel Assy., 26 x 9.5-12 (52V) |
| | 481659 | Rim w/ Valve Stem (52V) |
| | 485608 | Tire, 26 x 9.5-12 (52V) |
| | 486159 | Wheel Assy., 26 x 12-12 (61V & 72V) |
| | 481851 | Rim w/Valve Stem (61V & 72V) |
| | 486162 | Tire, 26 x 12-12 (61V & 72V) |
| 39 | 04028-02 | Wheel Nut, 1/2-20 |
| 40 | 04001-08 | Bolt, Hex Head 5/16-18 x 3/4" |
| 41 | 48796 | Bearing, Self Aligning - 5/8 I.D. |
| 42 | 04021-10 | Nut, Elastic Stop 5/16-18 |
| 43 | 453094 | Bellcrank Weldment, Brake Actuator |
| 44 | 462844 | Linkage Assy., RH Brake (incl. #13 - #18) |
| 45 | 04020-26 | Nut, 3/8-24 UNF LH Jam |
| 46 | 04001-32 | Bolt, Hex Head 3/8-16 x 1-1/4" |
| 47 | 04102-14 | Bolt, Hex Head w/ Patch 3/8-16 x 1-3/4" |
| 48 | 482586 | Rod End, Male - RH, 3/8-24 Thread |
| 49 | 04021-19 | Nut, Lock, 1/2-13 |
| 50 | 428092 | Bracket, Brake Switch |
| 51 | 423279 | Plate, Motor Backing |
| 52 | 431094 | Bushing, Brake |
| 53 | 48680 | Nut, Castle 1"- 20 UNEF |

# STTII STEERING COMPONENTS

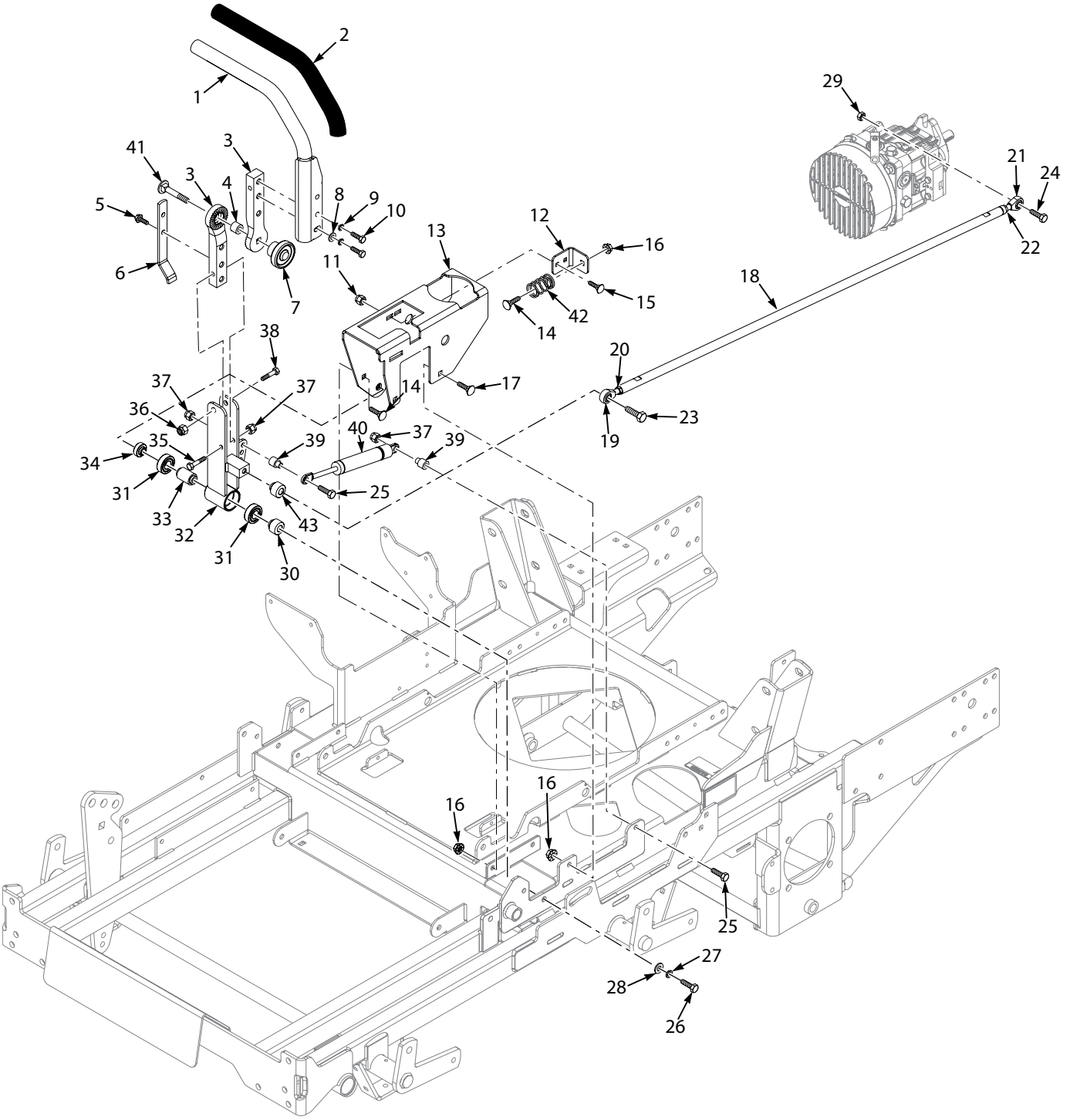

# STTII STEERING COMPONENTS

| Ref. No. | Part No. | Description |
|---|---|---|
| 1 | 462804 | Handle Bar w/Grip - LH (INCL #2) |
| | 462805 | Handle Bar w/Grip - RH (INCL #2) |
| 2 | 484376 | Grip, Control Lever |
| 3 | 461938 | Pivot, Control Lever (INCL #4,5,6,7,41) |
| 4 | 483250 | Spacer, Rubber |
| 5 | 04017-16 | Bolt, Hex Head Serrated Flange 5/16-18 x 3/4" |
| 6 | 423491 | Actuator, Switch |
| 7 | 483269 | Knob, Control Handle |
| 8 | 04040-15 | Flatwasher, 5/16-.375 x .875 x .083 |
| 9 | 04030-03 | Lockwasher, 5/16 |
| 10 | 04001-09 | Bolt, Hex Head 5/16-18 x 1" |
| 11 | 04117-03 | Nut, Flange Elastic Stop 1/4-20 |
| 12 | 427108 | Mounting Bracket, Spring Return |
| 13 | 463221 | Control Plate w/Decals LH |
| | 463222 | Control Plate w/Decals RH |
| 14 | 04003-12 | Bolt, Carriage 5/16-18 x 3/4" |
| 15 | 04003-02 | Bolt, Carriage 1/4-20 3/4" |
| 16 | 04019-03 | Nut, Serrated Flange 5/16-18 |
| 17 | 04013-03 | Capscrew, Flange 5/16-18 x 3/4" |
| 18 | 486479 | Linkage Assy., Pump Control (incl. #19 - #22) |
| 19 | 482585 | Rod End, Male - LH |
| 20 | 04026-26 | Nut, 3/8-24 UNF LH Jam |
| 21 | 482586 | Rod End, Male - RH |
| 22 | 04020-25 | Nut, 3/8-24 UNF Jam |
| 23 | 04001-21 | Bolt, Hex Head 3/8-16 x 1-3/4" |
| 24 | 04001-32 | Bolt, Hex Head 3/8-16 x 1-1/4" |
| 25 | 04001-11 | Bolt, Hex Head 5/16-18 x 1-1/2" |
| 26 | 04001-152 | Bolt, Hex Head 3/8-16 x 4-1/4" |
| 27 | 04030-04 | Lockwasher, 3/8" |
| 28 | 04041-07 | Flatwasher, 3/8-.391 x .938 x .105 |
| 29 | 04021-05 | Nut, Center Lock 3/8-16 |
| 30 | 43607 | Spacer, Controls |
| 31 | 48224 | Bearing |

| Ref. No. | Part No. | Description |
|---|---|---|
| 32 | 452718 | Control Lever Weldment, RH |
| | 452717 | Control Lever Weldment, LH |
| 33 | 43600 | Spacer, Bearing |
| 34 | 431024 | Spacer, Controls |
| 35 | 04001-17 | Bolt, Hex Head 5/16/-18 x 2" |
| 36 | 04021-09 | Nut, Elastic Stop 3/8-16 |
| 37 | 04021-10 | Nut, Elastic Stop 5/16-18 |
| 38 | 04001-45 | Bolt, Hex Head 3/8-16 x 2" |
| 39 | 43602 | Spacer, Dampener |
| 40 | 484151 | Dampener |
| 41 | 04003-05 | Bolt, Carriage 3/8-16 x 1-1/2" |
| 42 | 485970 | Return Spring, Control Arm |
| 43 | 43123 | Spacer, Cam Pivot |

# STTII HYDRAULIC SYSTEM - DUAL CORE COOLER

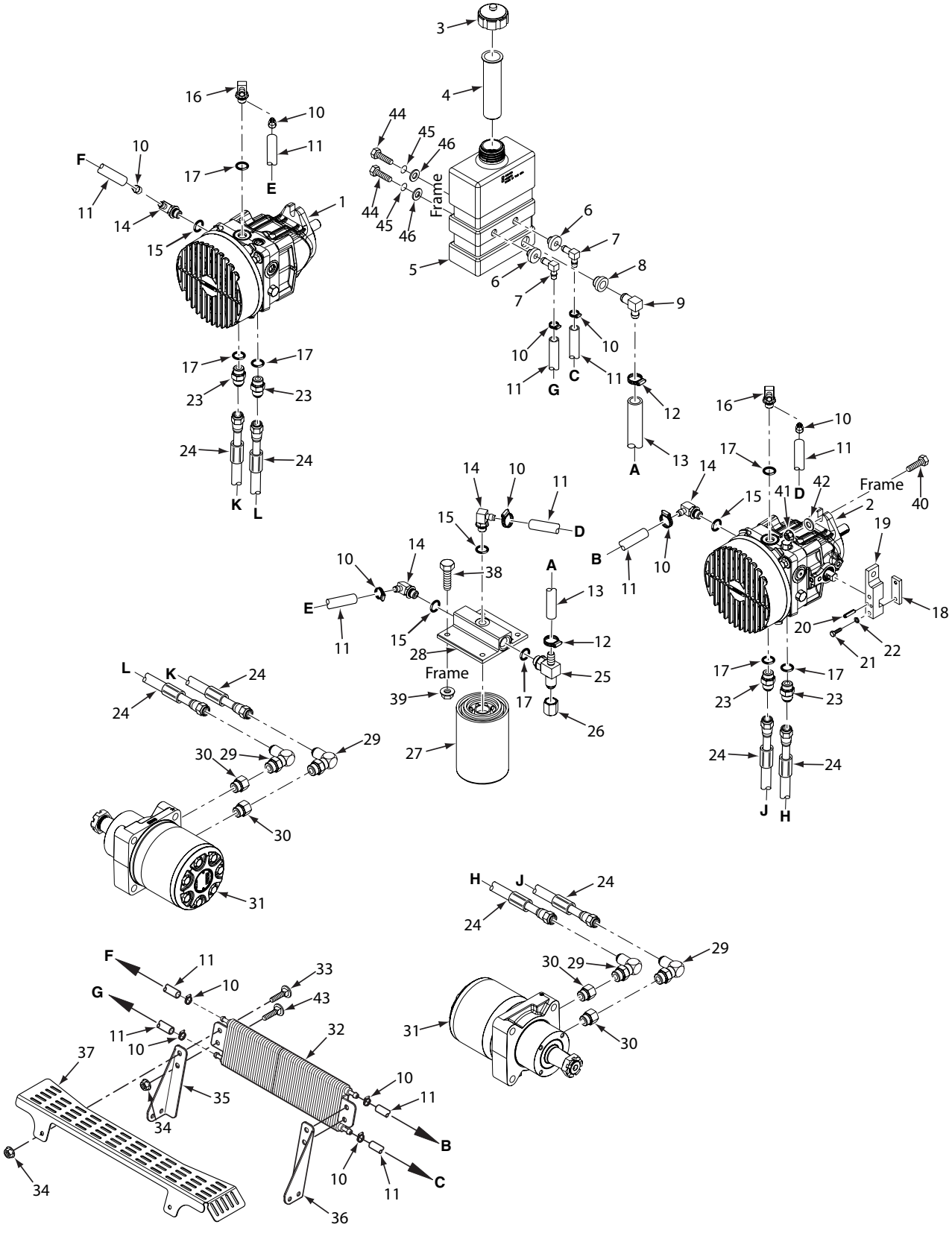

# STTII HYDRAULIC SYSTEM - DUAL CORE COOLER

| Ref. No. | Part No. | Description |
|---|---|---|
| 1 | 483100 | Pump, RH w/Fan |
| | 462954 | Pump, RH w/Fan (25LP Only) |
| 2 | 483101 | Pump, LH, w/Fan |
| 3 | 481164 | Cap, Hydraulic Tank |
| 4 | 481507 | Insert, Filler Neck |
| 5 | 462845 | Hydraulic Tank Assy., STTII (incl. #4, #6 - #9) |
| 6 | 482571 | Bushing, .56 Dia. Viton |
| 7 | 482572 | Fitting, 90 Degree - .38 Hose |
| 8 | 482573 | Bushing, .78 Dia Viton |
| 9 | 482574 | Fitting, 90 Degree - .50 Hose |
| 10 | 48136-13 | Clamp, Hose |
| 11 | 48811 | Hose, 3/8 Pushlock (order by inch) |
| 12 | 48136-05 | Clamp, Hose |
| 13 | 48351 | Hose, 1/2 Pushlock (order by inch) |
| 14 | 482266-01 | Elbow, 90 Degree - 9/16 O-Ring (incl. #15) |
| 15 | 48603-06 | O-Ring, 9/16-18 Thread |
| 16 | 482266-02 | Elbow, 90 Degree - 3/4 O-Ring (incl. #17) |
| 17 | 48603-02 | O-Ring, 3/4-16 Thread |
| 18 | 422694 | Plate, Pump Control Clamp |
| 19 | 485969 | Block, RH Pump Control |
| | 485968 | Block, LH Pump Control |
| 20 | 04060-09 | Pin, 7/32 x 1" |
| 21 | 04001-04 | Bolt, Hex Head 1/4-20 x 1-1/2" |

| Ref. No. | Part No. | Description |
|---|---|---|
| 22 | 04030-02 | Lockwasher, 1/4 |
| 23 | 48572-06 | Fitting, Union 3/4-16 JIC X O-Ring (incl. #17) |
| 24 | 484458 | Hose Assembly |
| | 485767 | Hose Assembly (Diesel Only) |
| 25 | 482477 | Tee Fitting, 3/4 - O-Ring (incl. #17) |
| 26 | 48571-02 | Cap, JIC |
| 27 | 48758 | Filter, Spin-On |
| 28 | 482417 | Filter Head Assembly |
| 29 | 48350-05 | Elbow, 90 Degree - 5/8 Tube |
| 30 | 48938-02 | O-Ring Bushing, 5/8 Tube |
| 31 | 484108 | Wheel Motor, Parker TG - 18ci. |
| 32 | 482505 | Cooler, Transmission - Dual Core |
| 33 | 04003-02 | Bolt, Carriage 1/4-20 x 3/4 |
| 34 | 04019-02 | Nut, Serrated Flange 1/4-20 |
| 35 | 428197 | Mounting Bracket, Cooler - RH |
| | 428209 | Mounting Bracket, Cooler - RH (Diesel) |
| 36 | 428196 | Mounting Bracket, Cooler - LH |
| | 428210 | Mounting Bracket, Cooler - LH (Diesel) |
| 37 | *428252 | Screen Guard, Kohler EFI (LP) |
| | *428199 | Screen Guard, Briggs & Stratton 31&35BV |
| | *428200 | Screen Guard, Briggs & Stratton 37BV-EFI |
| 38 | 04001-09 | Bolt, Hex Head, 5/16-18 x 1" |
| 39 | 04019-03 | Nut, Serrated Flange, 5/16-18 |
| 40 | 04001-20 | Bolt, Hex Head, 3/8-16 x 1-1/2" |
| 41 | 04021-09 | Nut, Lock, 3/8-16 |
| 42 | 04043-04 | Flatwasher, 3/8 |
| 43 | 04003-07 | Bolt, Carriage, 1/4-20 x 1/2" |
| 44 | 04001-08 | Bolt, Hex Head 5/16-18 x 3/4" |
| 45 | 04030-03 | Lockwasher, 5/16 |
| 46 | 04040-15 | Flatwasher, 5/16, .375 x .875 x .083 |

* Air Cooled Models Only.

# STTII HYDRAULIC SYSTEM - SINGLE CORE COOLER

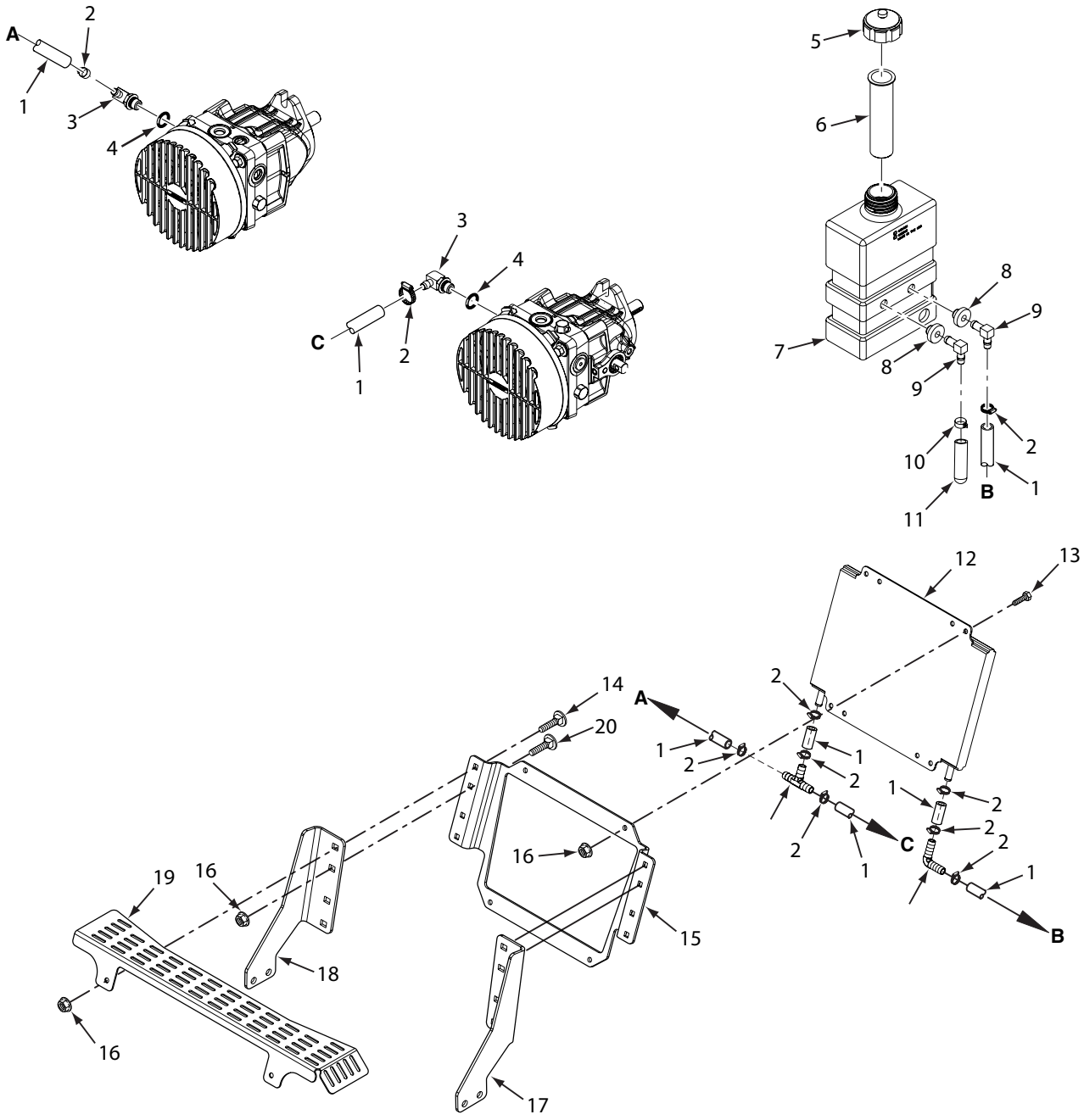

# STTII HYDRAULIC SYSTEM - SINGLE CORE COOLER

| Ref. No. | Part No. | Description |
|---|---|---|
| 1 | 48811 | Hose, 3/8 Pushlock (order by inch) |
| 2 | 48136-13 | Clamp, Hose |
| 3 | 482266-01 | Elbow, 90 Degree - 9/16 O-Ring (incl. #15) |
| 4 | 48603-06 | O-Ring, 9/16-18 Thread |
| 5 | 481164 | Cap, Hydraulic Tank |
| 6 | 481507 | Cap, Hydraulic Tank Insert, Filler Neck |
| 7 | 482572 | Hydraulic Tank Assy., STTII (incl. #4, #6 - #9) |
| 8 | 482571 | Bushing, .56 Dia. Viton |
| 9 | 482572 | Fitting, 90 Degree - .50 Hose |
| 10 | 48059-01 | Clamp |
| 11 | 484352-03 | Cap Plug, .375 x 1.50 |
| 12 | 484317 | Cooler, Transmission - Single Core |
| 13 | 04001-01 | Bolt, Hex Head 1/4-20 x 3/4" |
| 14 | 04003-02 | Bolt, Carriage 1/4-20 x 3/4 |
| 15 | 428492 | Mounting Bracket, Oil Cooler (air cooled) |
| | 428524 | Mounting Bracket, Oil Cooler (liquid cooled) |
| 16 | 04019-02 | Nut, Serrated Flange 1/4-20 |
| 17 | 428196 | Mounting Bracket, Cooler - LH |
| 18 | 428197 | Mounting Bracket, Cooler - RH |
| 19 | *428252 | Screen Guard, Kohler EFI (LP) |
| | *428199 | Screen Guard, Briggs & Stratton 31&35BV |
| | *428200 | Screen Guard, Briggs & Stratton 37BV-EFI |
| 20 | 04003-07 | Bolt, Carriage, 1/4-20 x 1/2" |

NOTE - Components not shown are the same as the Dual Core Cooler Hydraulic System shown on the previous page.
* Air Cooled Models Only.

# STTII FUEL SYSTEM - GASOLINE ENGINES

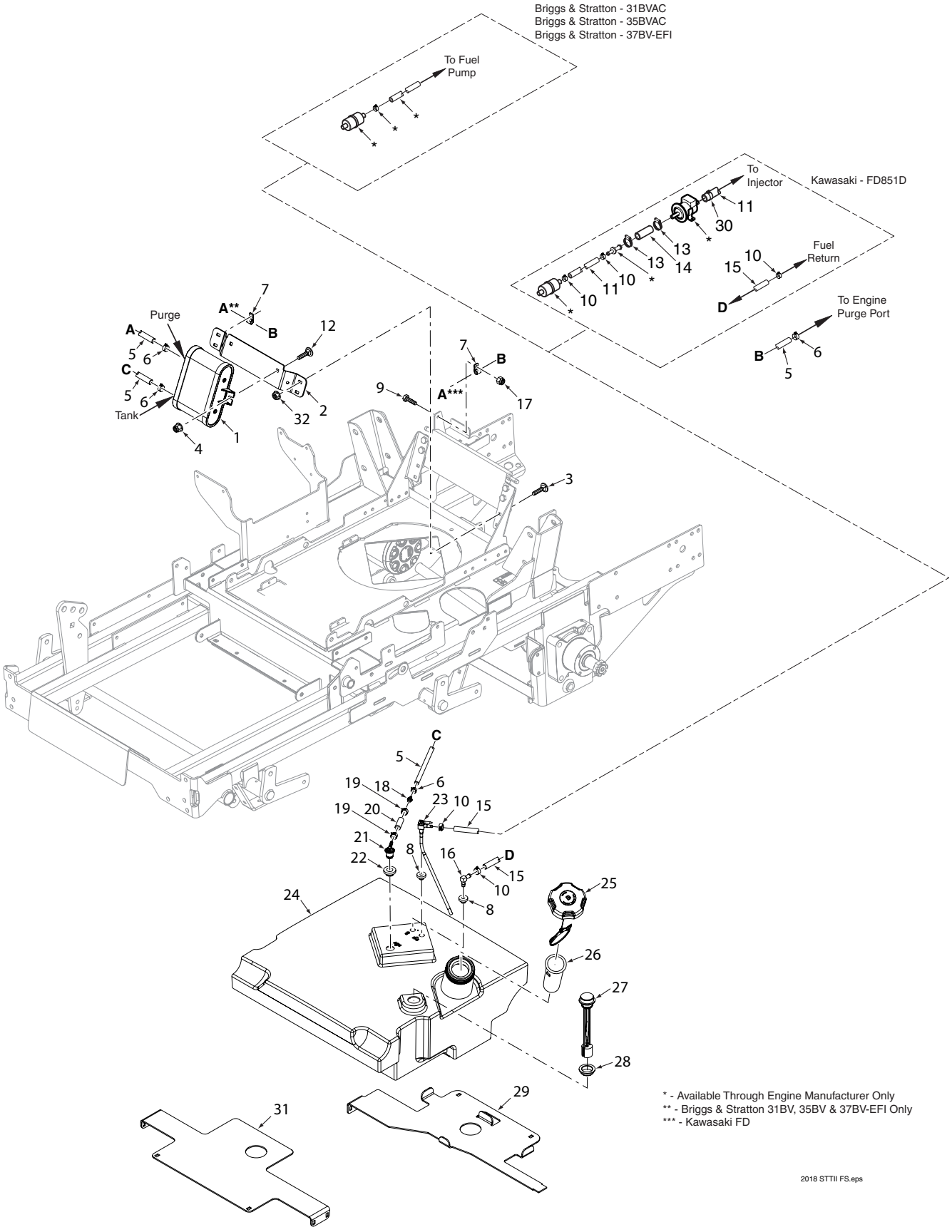


* - Available Through Engine Manufacturer Only
** - Briggs & Stratton 31BV, 35BV & 37BV-EFI Only
*** - Kawasaki FD

# STTII FUEL SYSTEM - GASOLINE ENGINES

| Ref. No. | Part No. | Description |
|---|---|---|
| 1 | 485621 | Canister, 1.0 Liter |
| 2 | 427051 | Bracket, Carbon Canister |
| | 428203 | Bracket, Carbon Canister (31DFI) |
| 3 | 04003-02 | Bolt, Carriage 1/4-20 x 3/4" |
| 4 | 04117-01 | Nut, Flange Elastic Stop 5/16-18 |
| 5 | 484345 | Hose, 3/16 (order by inch) |
| 6 | 48059-05 | Clamp, Vapor Recovery Hose 3/16 |
| 7 | 48030-22 | Clamp, Cable - .375 Dia. |
| 8 | 482571 | Bushing, .56 Dia. Viton |
| 9 | 04001-14 | Bolt, Hex Head 1/4-20 x 1" |
| 10 | 48059-01 | Clamp, Fuel Return |
| 11 | 483620 | Fuel Hose, 5/16 I.D. Non-Perm (order by inch) |
| 12 | 04003-12 | Bolt, Carriage 5/16-18 x 3/4" |
| 13 | 48136-05 | Clamp, .87 Max. Dia. |
| 14 | 483622 | Fuel Hose, 1/2 I.D. Non-Perm (order by inch) |
| 15 | 483617 | Fuel Hose, 1/4 I.D. Non-Perm (order by inch) |
| 16 | 485683 | Return Fitting |
| 17 | 04117-03 | Nut, Elastic Stop 1/4-20 |
| 18 | 484343-01 | Mender, 1/4 x 3/16 w/.02 Hole |
| 19 | 48059-02 | Clamp, Fuel Hose 7/32 I.D. |
| 20 | 484347 | Hose, Vapor Recovery 1/4 (order by inch) |
| 21 | 484333 | Remote Vent |
| 22 | 484285 | Grommet, Viton |
| 23 | 485701 | Valve, Fuel Shutoff |
| 24 | 462833 | Fuel Tank Assy. - Kawasaki DFI |
| | 463148 | Fuel Tank Assy. |
| 25 | 484286 | Fuel Cap, Tethered |
| | *484297 | Fuel Cap, Tethered (CA) |
| 26 | 484279-02 | Tube, Fuel Tank Insert - 8" |
| 27 | 485687 | Fuel Gauge Assy., 8" (incl. #28) |
| 28 | 484242 | Seal, Fuel Gauge |
| 29 | 428024 | Rear Support, Fuel Tank |
| 30 | 48136-13 | Clamp, .69 Dia. |
| 31 | 428023 | Front Support, Fuel Tank |
| 32 | 04019-02 | Nut, Serrated Flange 1/4-20 |
| ** | 462840 | Hose Assy, Vapor Recovery (INCL 5,6,18,19,20) |
| ** | 485742 | Pad, Fuel Tank |

* California Models Only.
** Item Not Shown

# STTII FUEL SYSTEM - KOHLER 25CH-LP-EFI

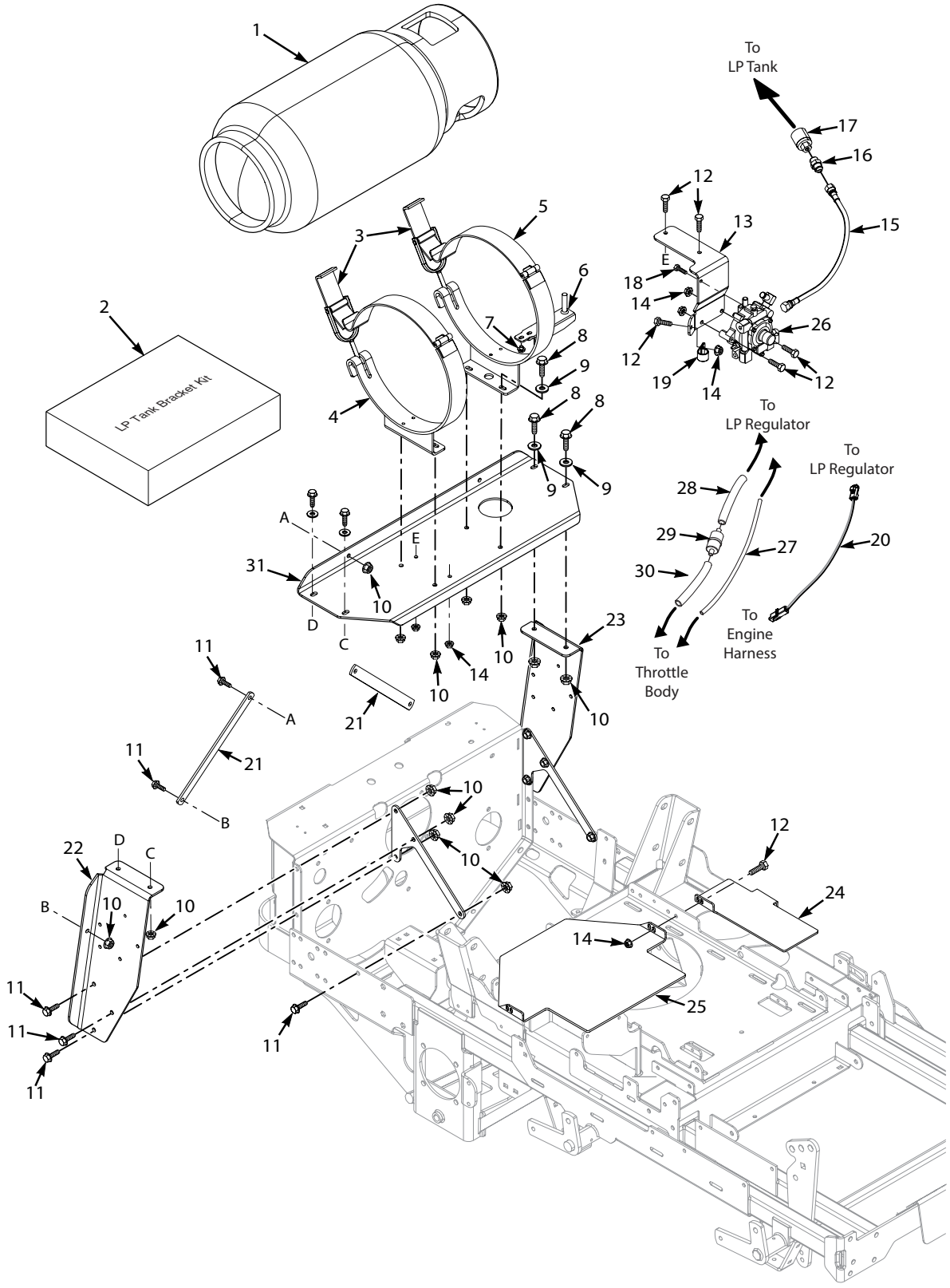

# STTII FUEL SYSTEM - KOHLER 25CH-LP-EFI

| Ref. No. | Part No. | Description |
|---|---|---|
| 1 | 485376 | LP Tank - Vapor (INCL 17) |
| 2 | 483903 | Mounting Bracket Kit (INCL # 3, 4, 5, 6, 7) |
| 3 | 483911 | Handle, LP Tank Mounting Bracket |
| 4 | 483910 | Mounting Bracket, LP Tank Rear |
| 5 | 483909 | Mounting Bracket, LP Tank Front |
| 6 | 483912 | Bracket, LP Tank Locator |
| 7 | 04001-07 | Bolt, Hex Head 5-16-18 x 1/2" Locking |
| | 04031-09 | Lockwasher, 5/16 Internal Tooth |
| | 04040-04 | Flatwasher, 5/16 - .344 x .688 x .065 |
| 8 | 04001-19 | Bolt, Hex Head 3/8-16 x 1" |
| 9 | 04041-07 | Flatwasher, 3/8-.391 x .938 x .105 |
| 10 | 04019-04 | Nut, Serrated Flange 3/8-16 |
| 11 | 04001-18 | Bolt, Head Head 3/8-16 x 3/4" |
| 12 | 04001-08 | Bolt, Hex Head 5/16-18 x 3/4" |
| 13 | 427688 | Mounting Bracket, Regulator |
| 14 | 04019-03 | Nut, Serrated Flange 5/16-18 |
| 15 | 486165 | LP Fuel Line, 17" |
| 16 | 483889-01 | Adapter Fitting, 9/16-18 SAE x 1/4" Pipe |
| 17 | 485377 | LP Quick Coupler |
| 18 | 04001-01 | Bolt, Hex Head 1/4-20 x 3/4" |
| 19 | 48030-10 | Clamp, Cable |
| 20 | 486164 | Adapter, Wire Harness |
| 21 | 422386 | Brace, Engine Mounting |
| 22 | 426741 | Mounting Bracket, Tank Support - RH |
| 23 | 426740 | Mounting Bracket, Tank Support - LH |
| 24 | 428221 | Cover, Fuel Fill Hole |
| 25 | 428222 | Cover, Fuel Tank Hole |
| 26 | ** | LP Regulator |
| 27 | ** | Hose |
| 28 | ** | Hose |
| 29 | ** | Fuel Filter |
| 30 | ** | Hose |
| 31 | 427753 | Support, LP Tank |

** Available through the engine manufactuer.

# STTII FUEL SYSTEM - KUBOTA DIESEL

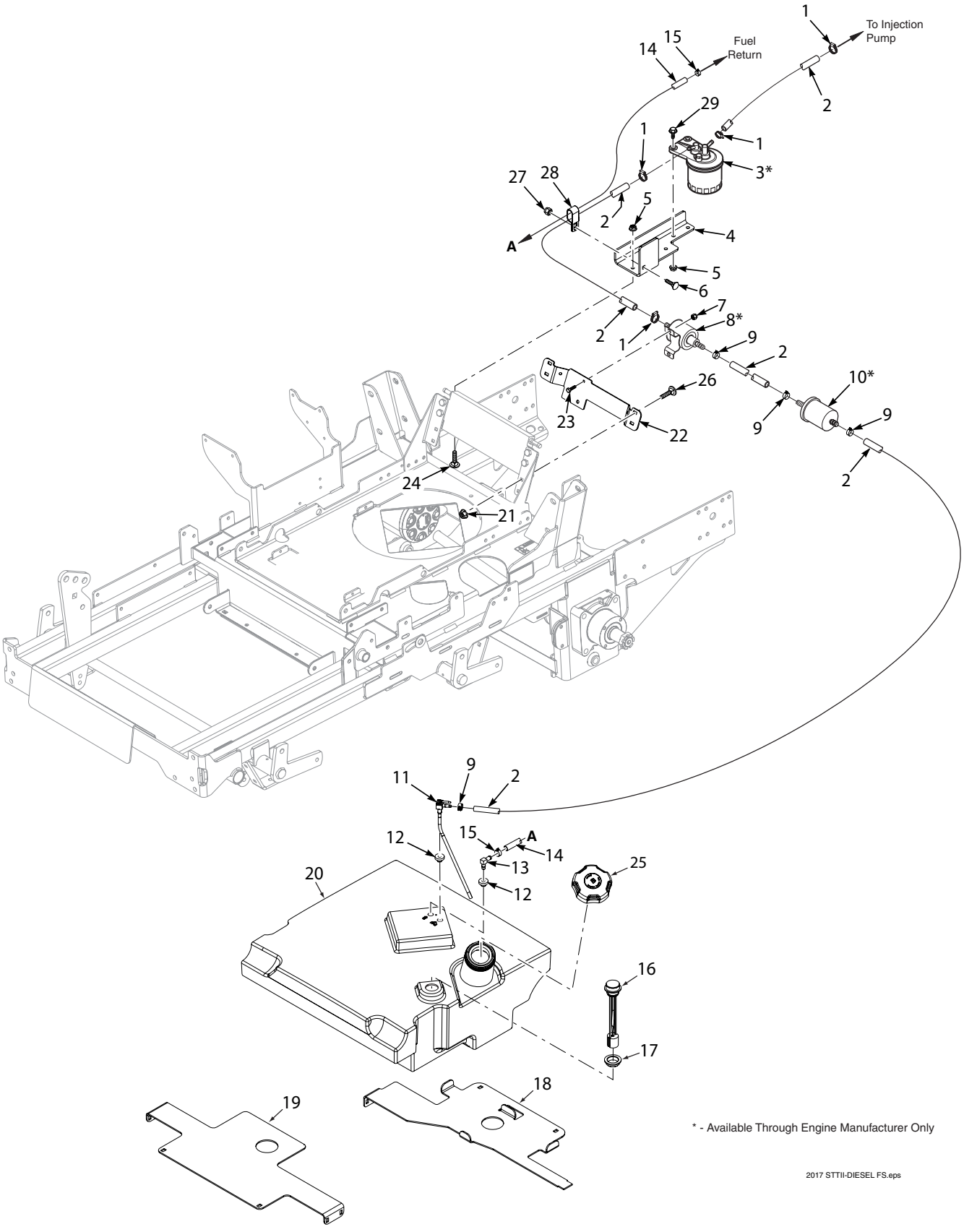

# STTII FUEL SYSTEM - KUBOTA DIESEL

| Ref. No. | Part No. | Description |
|---|---|---|
| 1 | 48136-13 | Hose Clamp, 0.69" Dia. |
| 2 | 483620 | ** Fuel Hose, 5/16" ID. Non-Perm. |
| 3 | * | Fuel Filter, Kubota |
| 4 | 427164 | Bracket, Fuel Filter Mounting |
| 5 | 04019-03 | Nut, Serr. Flng. 5/16-18 |
| 6 | 04003-12 | Bolt, Carriage 5/16-18 x 3/4" |
| 7 | 04021-08 | Nut, Hex Elastic Stop 1/4-20 |
| 8 | * | Fuel Pump, Kubota |
| 9 | 48059-04 | Clamp, Fuel Supply Hose |
| 10 | * | Fuel Pre-Filter, Kubota |
| 11 | 485701 | Valve, Shutoff Assy |
| 12 | 482571 | Bushing, 0.56" Dia. Viton |
| 13 | 485626 | Fitting, Return |
| 14 | 481179 | ** Fuel Return Hose, 3/16" |
| 15 | 48059-03 | Clamp, Fuel Return Hose |
| 16 | 485687 | Fuel Gauge Assy., 8" (incl. #17) |
| 17 | 484242 | Seal, Fuel Gauge |
| 18 | 428024 | Rear Support, Fuel Tank |
| 19 | 428023 | Front Support, Fuel Tank |
| 20 | 463149 | Fuel Tank Assembly (Incl. #11, 12, 15, 16) |
| 21 | 04019-02 | Nut, Serr. Flng. 1/4-20 |
| 22 | 428225 | Mounting Bracket, Fuel Pump |
| 23 | 04003-02 | Bolt, Carriage, 1/4-20 x 3/4" |
| 24 | 04003-04 | Bolt, Carriage 5/16-18 x 1" |
| 25 | 484294 | Fuel Cap |
| 26 | 04003-02 | Bolt, Carriage 1/4-20 x 3/4" |
| 27 | 04117-01 | Nut, Flange Elastic Stop Nut, 5/16-18 |
| 28 | 48030-11 | Clamp, Hose |
| 29 | 04001-09 | Bolt, Hex Head, 5/16-18 x 1" |
| *** | 485742 | Pad, Fuel Tank |

* Available Through Engine Manufacturer Only.
** Order by the inch.
*** Item Not Shown

# BDP-16A HYDRAULIC PUMP ASSEMBLY with COOLING FAN

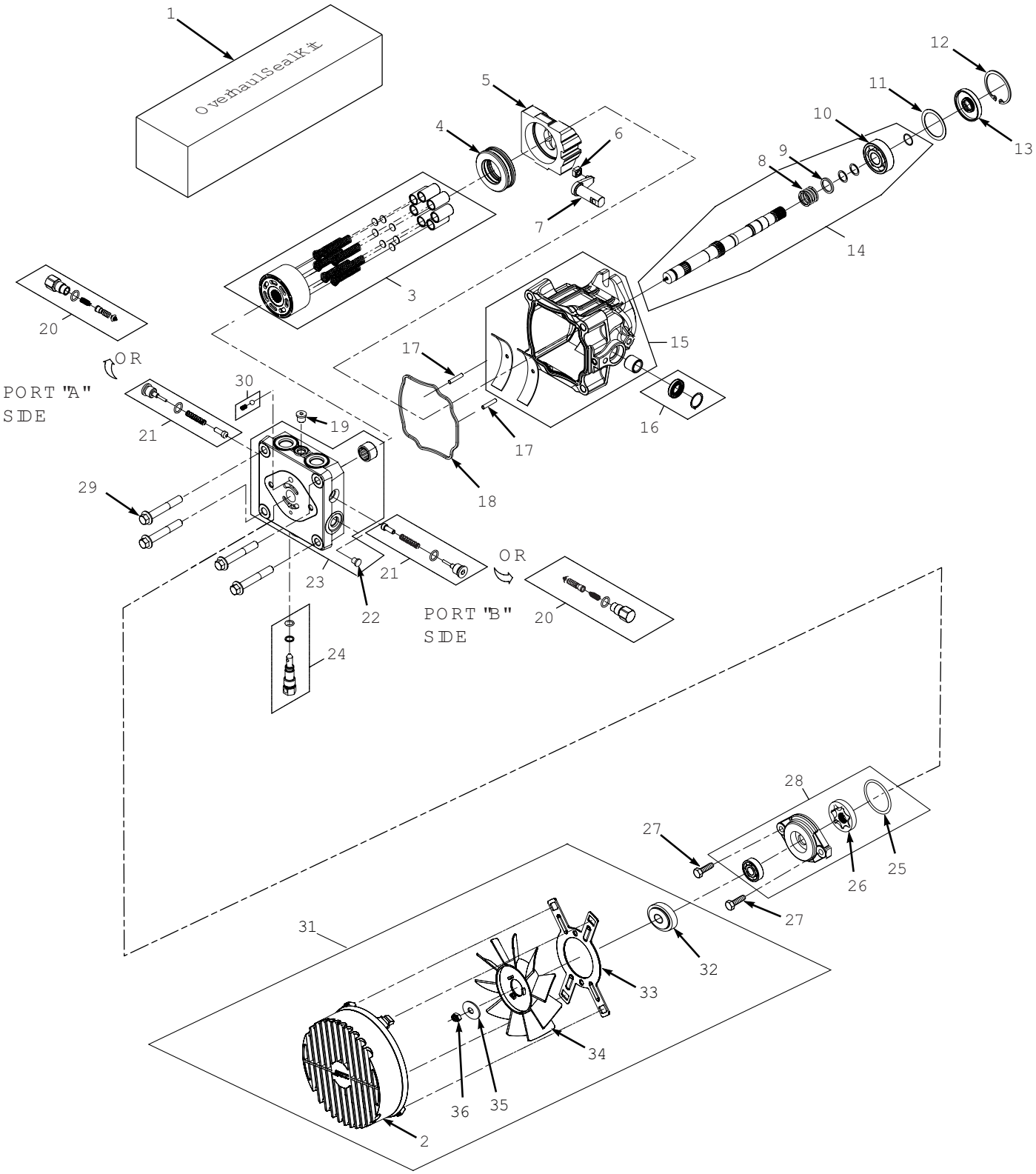

# BDP-16A HYDRAULIC PUMP ASSEMBLY with COOLING FAN

| Ref. No. | Part No. | Description |
|---|---|---|
| 1 | HG70740 | Overhaul Seal Kit |
| 2 | HG52059 | Fan Cover |
| | 485879 | Fan Cover w/ Notch (25LP Right Side Pump Only) |
| 3 | HG72158 | Cylinder Block Kit - 16cc |
| 4 | HG51462 | Thrust Ball Bearing Assembly |
| 5 | HG51436 | Variable Swashplate |
| 6 | HG2000015 | Slot Guide |
| 7 | HG2000014 | Trunnion Arm |
| 8 | HG2000025 | Block Spring |
| 9 | HG2000024 | Block Thrust Washer |
| 10 | HG2000032 | Shaft Ball Bearing |
| 11 | HG2000023 | Spacer |
| 12 | HG2000038 | Retaining Ring |
| 13 | HG51092 | Seal |
| 14 | HG70578 | Kit, Pump Shaft (keyed thru taper) |
| 15 | HG70738 | Housing Kit |
| 16 | HG70739 | Trunnion Seal Kit |
| 17 | HG50641 | Pin |
| 18 | HG51437 | O-Ring |
| 19 | HG9005110-7500 | Straight Thread Plug |
| 20 | HG70743 | Shock Valve Kit (.031 Orifice) |
| 21 | HG70742 | Shock Valve Kit (.024 Orifice) |
| 22 | HG9005200-7500 | Straight Thread Plug |
| 23 | HG70736 | End Cap Kit |
| 24 | HG2513030 | Bypass Valve Kit |
| 25 | HG9004100-1430 | O-Ring |
| 26 | HG50406 | Gerotor Assembly (.19 cu.in./rev.) |
| 27 | HG50173 | Socket Head Cap Screw (M8 x 1.25-25mm) |
| 28 | HG70924 | Charge Pump Kit (.19 STD. Splined) |
| 29 | HG51457 | Hex Screw, Flanged Head (M10 x 1.50-65mm) |
| 30 | HG70402 | Charge Relief Kit |
| 31 | HG71287 | Fan Kit (incl. items 32, 34, 35, 36) |
| 32 | HG51348 | Hub |
| 33 | HG52016 | Bracket, Shroud |
| 34 | HG52014 | Fan |
| 35 | HG52256 | Washer |
| 36 | HG44809 | Nut |

# STTII ELECTRICAL SYSTEM - GASOLINE & LP ENGINES

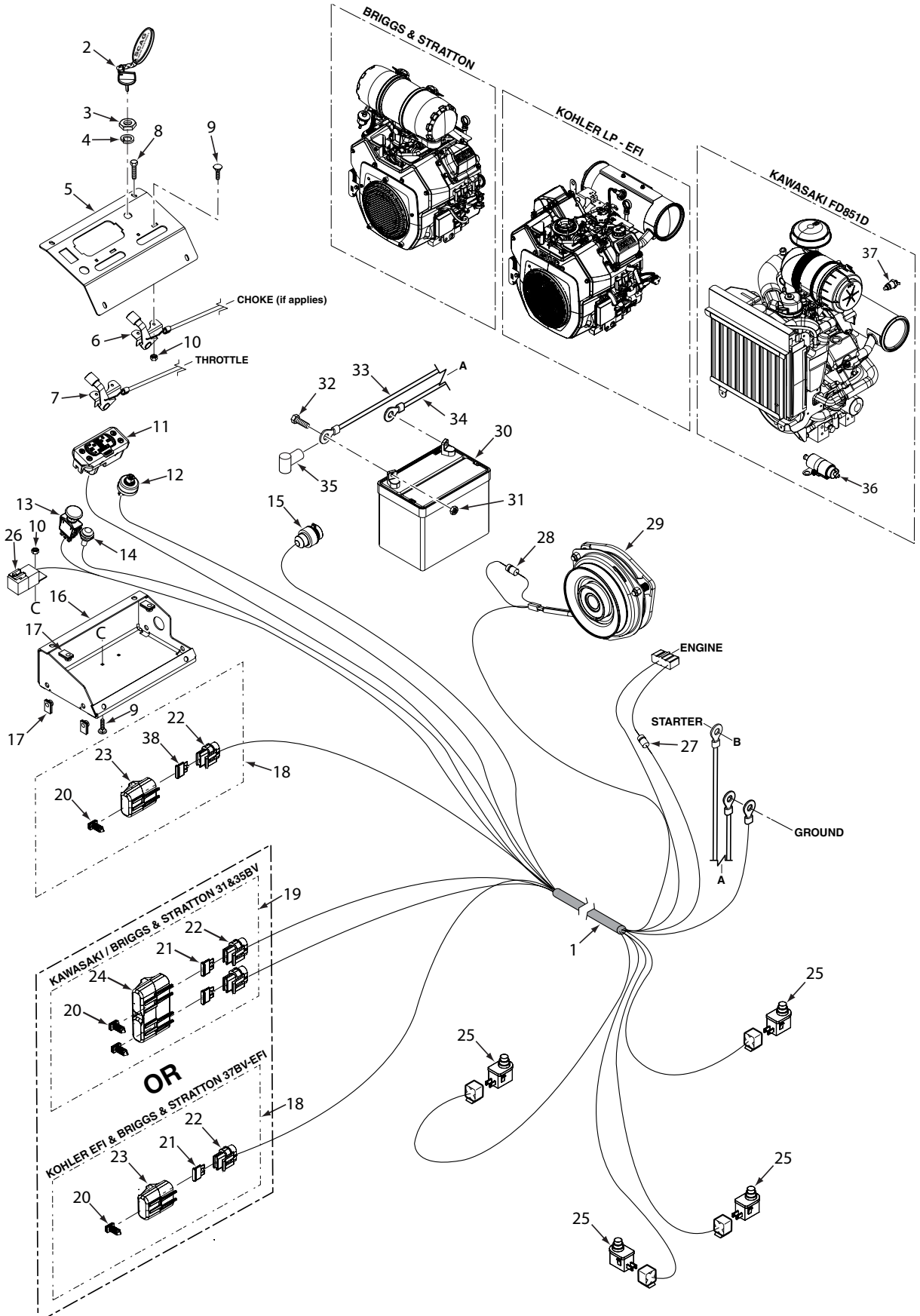

# STTII ELECTRICAL SYSTEM - GASOLINE & LP ENGINES

| Ref. No. | Part No. | Description |
|---|---|---|
| 1 | 486511 | Wire Harness, STTII-BV (Briggs & Stratton) |
| | 486512 | Wire Harness, STTII-BV-EFI (Briggs & Stratton) |
| | 486515 | Wire Harness, STTII-EFI (Kohler EFI-LP) |
| | 486513 | Wire Harness, STTII-FD851D DFI (Kawasaki) |
| 2 | 462069 | Key Assy., w/Fob |
| 3 | 48017-04 | Nut, Hex 5/8-32 |
| 4 | 48017-03 | Lockwasher, 5/8 Internal |
| 5 | 462930 | Instrument Panel w/Decal |
| 6 | 481544 | Choke Cable (31BV & 35BV) |
| 7 | 484289 | Control Cable, Throttle |
| | 481363 | Control Cable, Throttle (31BV, 35BV & 37BV) |
| 8 | 04013-04 | Capscrew, 1/4-20 x 3/4" |
| 9 | 04003-43 | Bolt, Carriage 1/4-20 x 1/2" |
| 10 | 04021-26 | Lock Nut, #10-24 |
| 11 | 484721 | Cluster Gauge |
| 12 | 48798 | Key Switch |
| 13 | 485833 | Switch, PTO |
| 14 | 481182 | Indicator Light Assy. (Kohler EFI-LP & Kawasaki DFI) |
| 15 | 485568 | Power Plug, 12V |
| 16 | 427541 | Base, Instrument Panel |
| 17 | 04110-01 | U-Nut, 1/4-20 |
| 18 | 485739 | Single Fuse Assy., Excluding Fuse (incl. #20, 22, 23) |
| 19 | 483642 | Double Fuse Assy. (incl. #20, 21, 22, 24) |
| 20 | 482588 | Clip, Wire |
| 21 | 48298 | Fuse, 20 Amp |
| 22 | 483629 | Fuse Holder |
| 23 | 483643 | Cover, Sealed Single |
| 24 | 483571 | Cover, Sealed Double |
| 25 | 481638 | Switch, N/O |
| 26 | 483013 | Relay |
| 27 | 482253 | Diode |
| 28 | 483958 | Diode, 600V - 6A |
| 29 | 461661 | Clutch Assembly, GT3.5 |
| | 461826 | Clutch Assembly, GT5 |
| 30 | * | Battery, 350 CCA |
| 31 | 04020-02 | Nut, 1/4-20 UNC |
| 32 | 04001-44 | Bolt, Hex Head 1/4-20 x 1/2" |
| 33 | 48029-30 | Battery Cable, 44" Red w/Braid (Kohler EFI-LP) |
| | 48029-29 | Battery Cable, 18" Red w/Braid (31DFI) - Kawasaki |
| | 48029-31 | Battery Cable, 50" Red w/Braid (31BV,35BV & 37BV-EFI) - Briggs & Stratton |
| 34 | 48029-24 | Battery Cable, 39" Black (Kohler EFI-LP) |
| | 48029-14 | Battery Cable, 31-1/2" Black (31DFI) - Kawasaki |
| | 48029-11 | Battery Cable, 27" Black (31BV,35BV & 37BV-EFI) - Briggs & Stratton |
| 35 | 48126 | Rubber Boot |
| 36 | ** | Fuel Pump |
| 37 | 481670 | Sender Unit, Water Temp. (Liquid Cooled Only) |
| 38 | 485674 | Fuse, 5 Amp |

* Not available through Scag.
** Available through the individual engine manufacturer.

# STTII ELECTRICAL SYSTEM - KUBOTA DIESEL

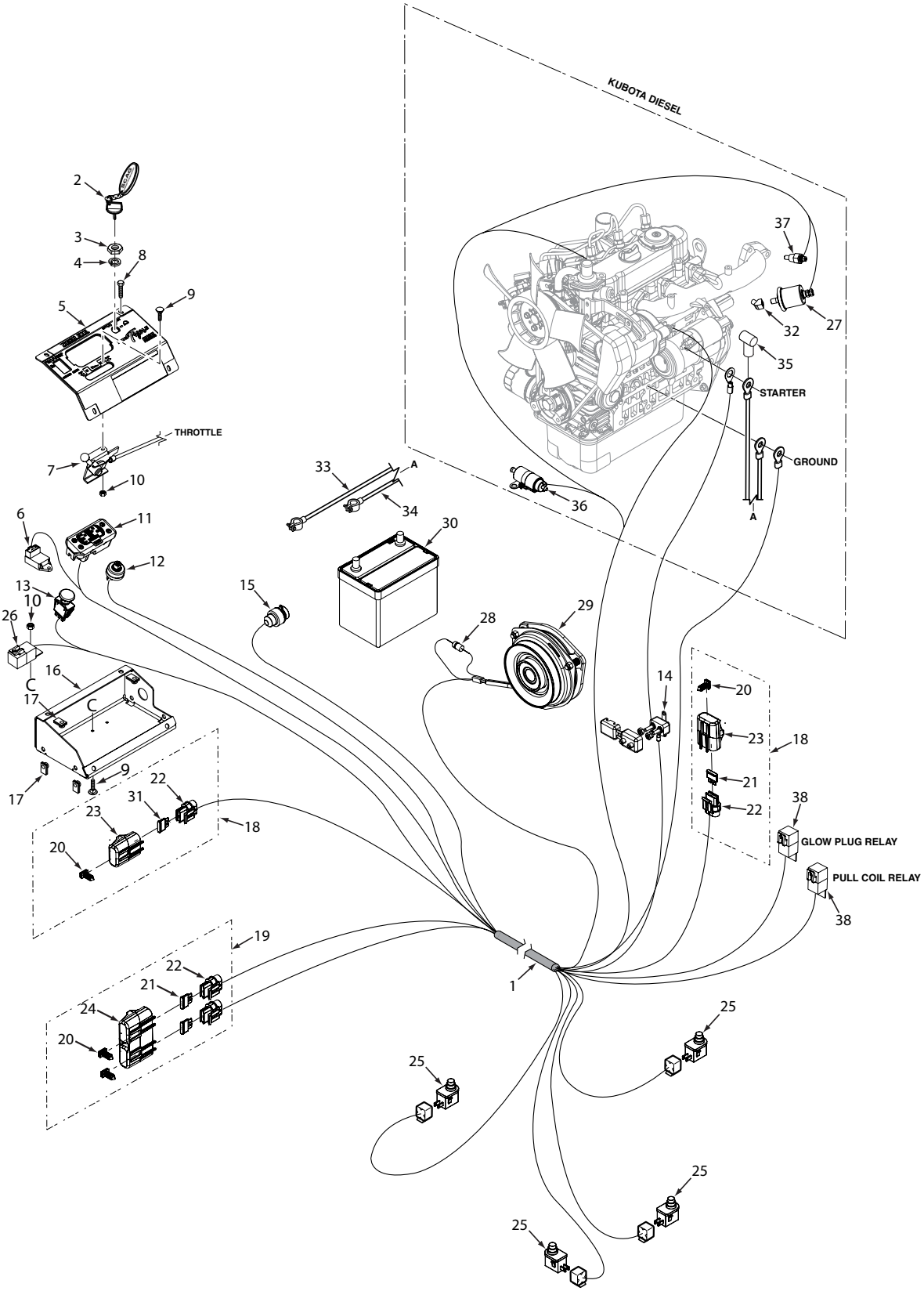

# STTII ELECTRICAL SYSTEM - KUBOTA DIESEL

| Ref. No. | Part No. | Description |
|---|---|---|
| 1 | 486514 | Wire Harness, STTII-25KBD |
| 2 | 462069 | Key Assy., w/Fob |
| 3 | 48017-04 | Nut, Hex 5/8-32 |
| 4 | 48017-03 | Lockwasher, 5/8 Internal |
| 5 | 462930 | Instrument Panel w/Decal |
| 6 | 483399 | Timer, Glow Plug |
| 7 | 483356 | Control Cable, Throttle |
| 8 | 04013-04 | Capscrew, 1/4-20 x 3/4" |
| 9 | 04003-43 | Bolt, Carriage 10-24 x 1/2" |
| 10 | 04021-26 | Lock Nut, #10-24 |
| 11 | 484721 | Cluster Gauge |
| 12 | 48798 | Key Switch |
| 13 | 485833 | Switch, PTO |
| 14 | 486588 | 50 Amp Breaker |
| 15 | 485568 | Power Plug, 12V |
| 16 | 427541 | Base, Instrument Panel |
| 17 | 04110-01 | U-Nut, 1/4-20 |
| 18 | 485739 | Single Fuse Assy., Excluding Fuse (incl. #20, 22, 23) |
| 19 | 483642 | Double Fuse Assy. (incl. #20, 21, 22, 24) |
| 20 | 482588 | Clip, Wire |
| 21 | 48298 | Fuse, 20 Amp |
| 22 | 483629 | Fuse Holder |
| 23 | 483643 | Cover, Sealed Single |
| 24 | 483571 | Cover, Sealed Double |
| 25 | 481638 | Switch, N/O |
| 26 | 483013 | Relay |
| 27 | 481811 | Sender Unit, Oil Pressure |
| 28 | 483958 | Diode, 600V - 6A |
| 29 | 462011 | Clutch Assembly, GT3.5 |
| 30 | * | Battery, 525 CCA |
| 31 | 485674 | Fuse, 5 Amp |
| 32 | 483433 | Elbow, 45 Degree Street |
| 33 | 481176-15 | Battery Cable, 14" Red w/Braid |
| 34 | 481176-11 | Battery Cable, 21" Black |
| 35 | 481335 | Rubber Boot |
| 36 | ** | Solenoid, Fuel Shut-Off |
| 37 | 483360 | Sender Unit, Water Temp. |
| 38 | 481826 | Relay |

* Not available through Scag.
** Available through the engine manufacturer. Reference model and serial number.

# REPLACEMENT DECALS AND INFORMATION PLATES



1

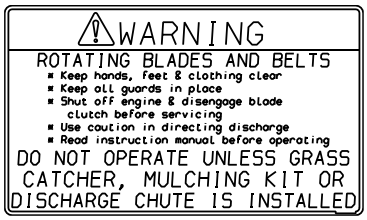

2



8

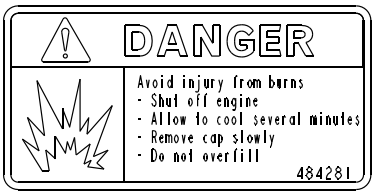

4



3



481568 6


5



7

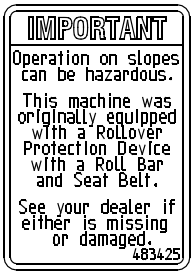

25



9

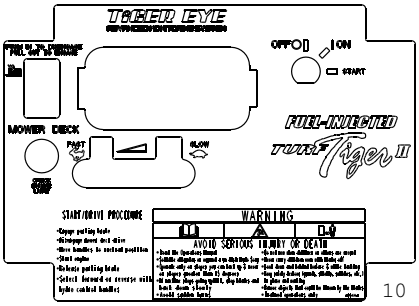

10

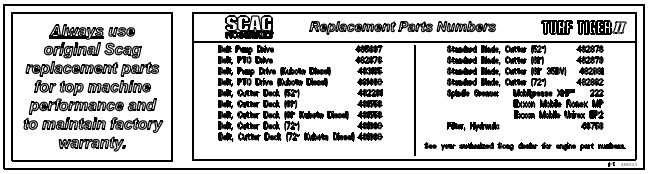

12

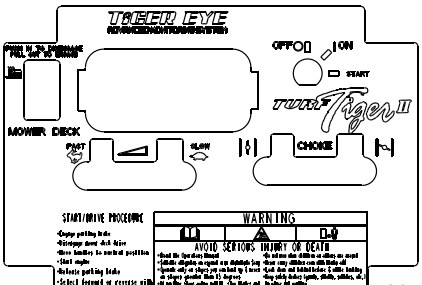

11



24



21



13



22

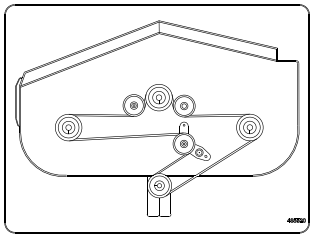
26

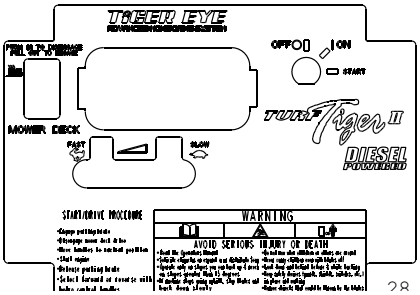

28



27



29

STTII 2019 Decal

# REPLACEMENT DECALS AND INFORMATION PLATES

| Ref. No. | Part No. | Description |
|---|---|---|
| 1 | 483407 | Decal, Danger - Spinning Blades |
| 2 | 483406 | Decal, Warning - Rotating Blades |
| 3 | 483200 | Decal, 52 Velocity Plus |
| | 483201 | Decal, 61 Velocity Plus |
| | 483693 | Decal, 72 Velocity Plus |
| 4 | 484281 | Decal, Fuel Tank - Gasoline Engines |
| | 484292 | Decal, Fuel Tank - Kubota Diesel |
| 5 | 482434 | Decal, Driveshaft |
| 6 | 481568 | Decal, Traction Control |
| 7 | 486584 | Decal, Parking Brake |
| 8 | 485403 | Decal, Metalcraft - USA |
| 9 | 483402 | Decal, Belt Cover |
| 10 | 485664 | Decal, Instrument Panel - Fuel Injected |
| 11 | 485964 | Decal, Instrument Panel |
| 12 | 486533 | Decal, STTII Replacement Parts |
| 13 | 486572 | Decal, Cutting Height - LH |
| 14 | 484321 | Decal, Fuel Tank Warning |
| 15 | 484320 | Decal, STT Adjustments |
| 16 | 485685 | Decal, Hood - STTII Fuel Injected |
| 17 | 486570 | Decal, Turf Tiger II |
| 18 | 481664 | Decal, Stripes-RH |
| 19 | 481663 | Decal, Stripes-LH |
| 20 | 485680 | Decal, Hood - STTII |
| 21 | 483405 | Decal, Warning |
| 22 | 486573 | Decal, Cutting Height - RH |
| 23 | 485700 | Decal, Turf Tiger II |
| 24 | 483633 | Decal, Seat Replacement |
| 25 | 483425 | Decal, ROPS |
| 26 | 485520 | Decal, Belt Routing (72V) |
| | 485519 | Decal, Belt Routing (52V/61V) |
| 27 | 486571 | Decal, Diesel Powered - Kubota Diesel |
| 28 | 485965 | Decal, Instrument Panel - Kubota Diesel |
| 29 | 485379 | Decal, Propane - Kohler LP-EFI |
| ** | 483900 | Decal, Warning Spark Arrestor (California Models Only - not shown) |
| ** | 461982 | Spanish Decal Kit, STT (not shown) |
| ** | 01411 | DVD Video, Tips for Safe Operation of Your Scag Zero-Turn Mower (not shown) |

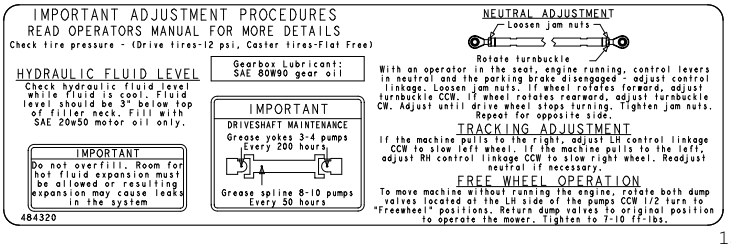


15

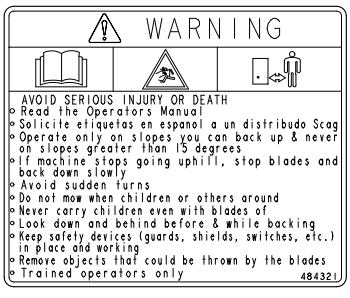


14

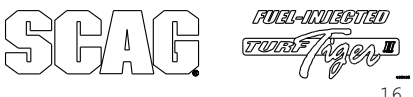


16




17




23

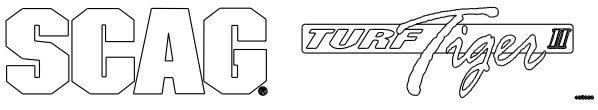


20

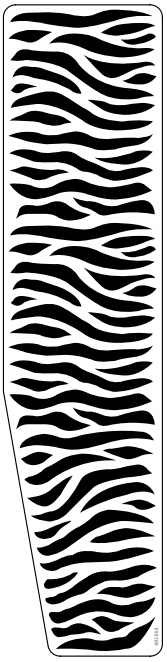

18

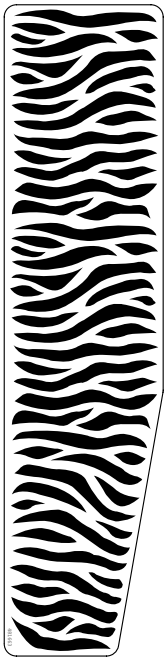

19

2017 STT Decals Page2

# ELECTRICAL SCHEMATIC - KOHLER EFI (LP)

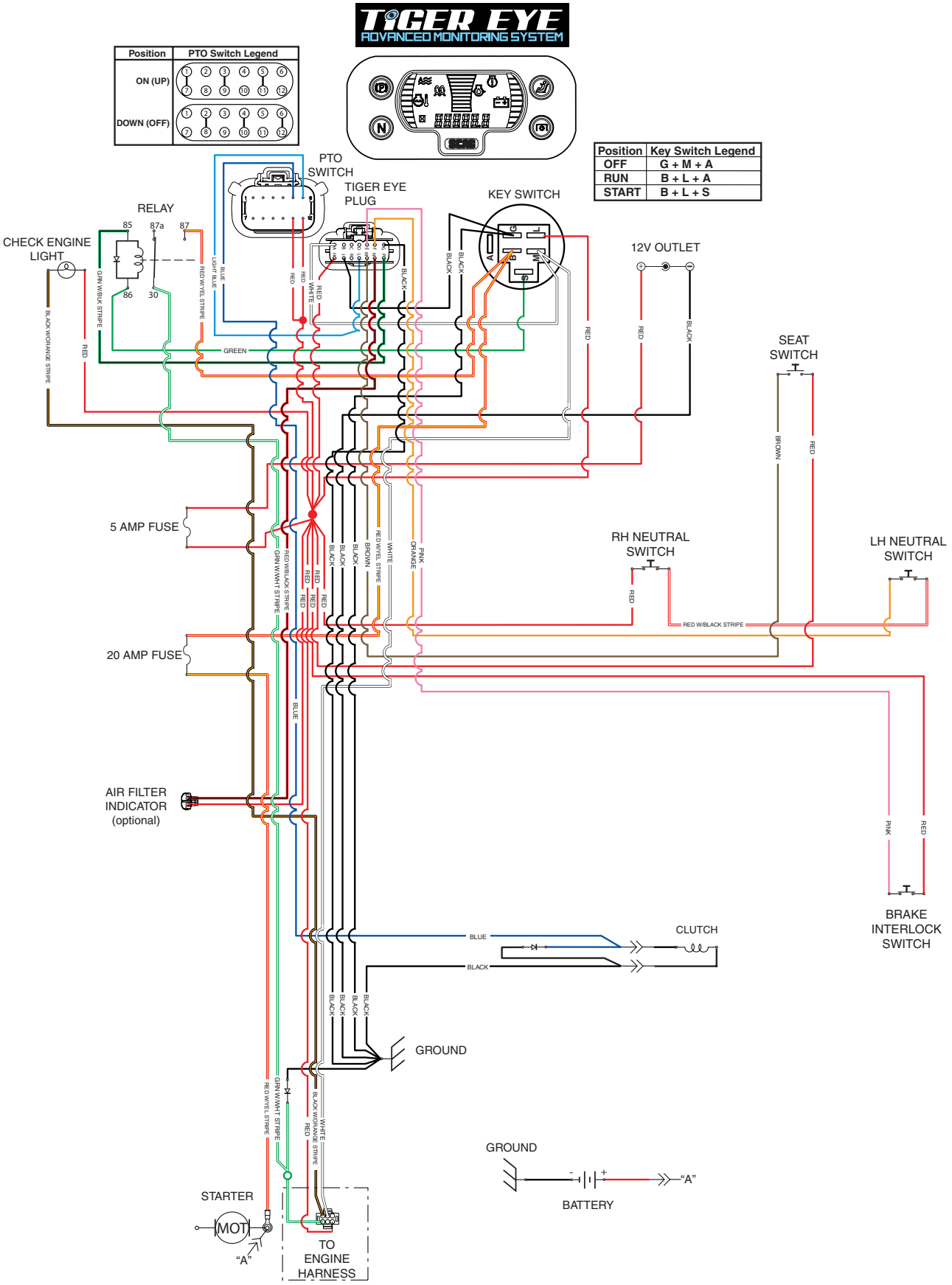

# ELECTRICAL SCHEMATIC - KUBOTA 25KBD

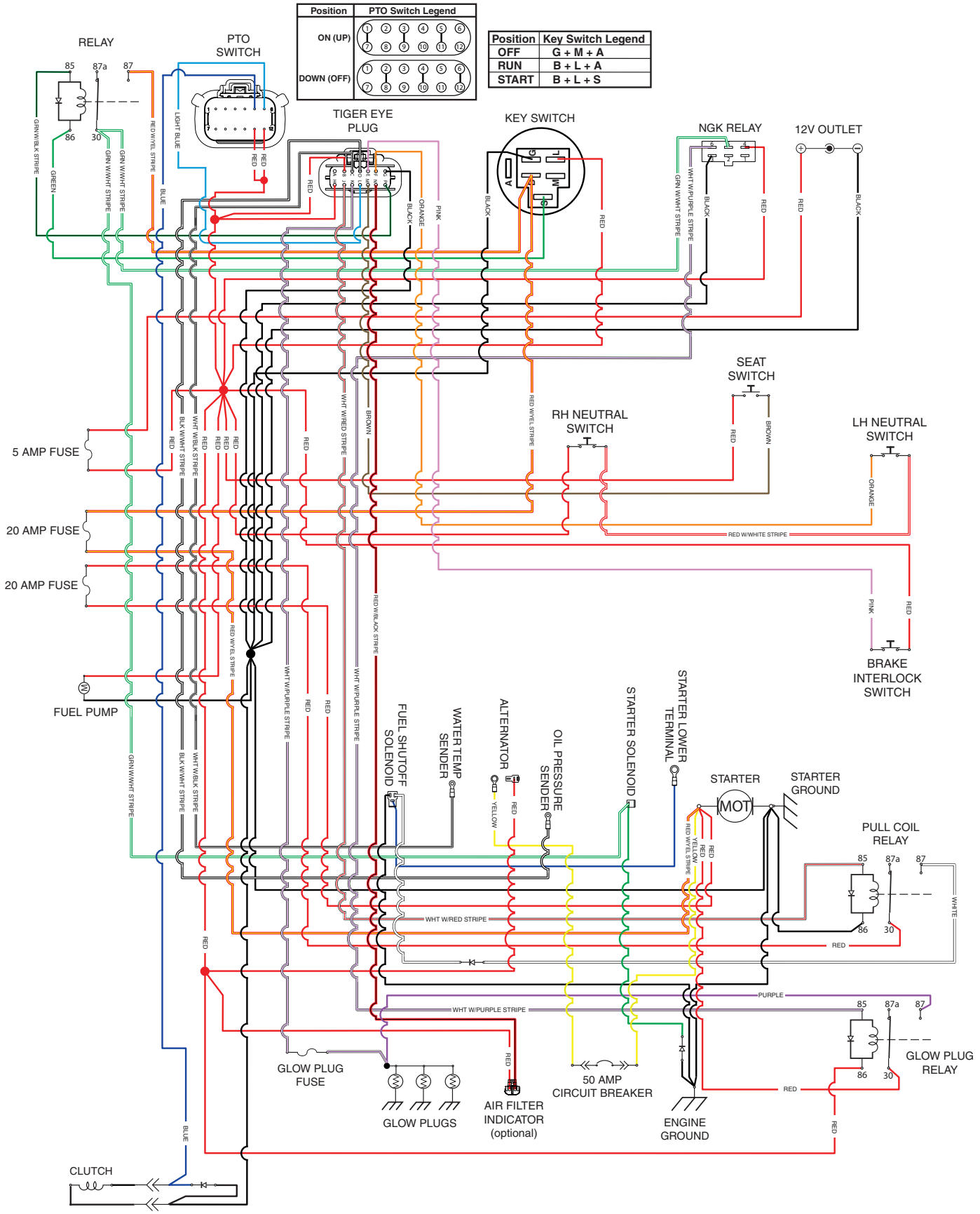

# ELECTRICAL SCHEMATIC - KAWASAKI 31DFI

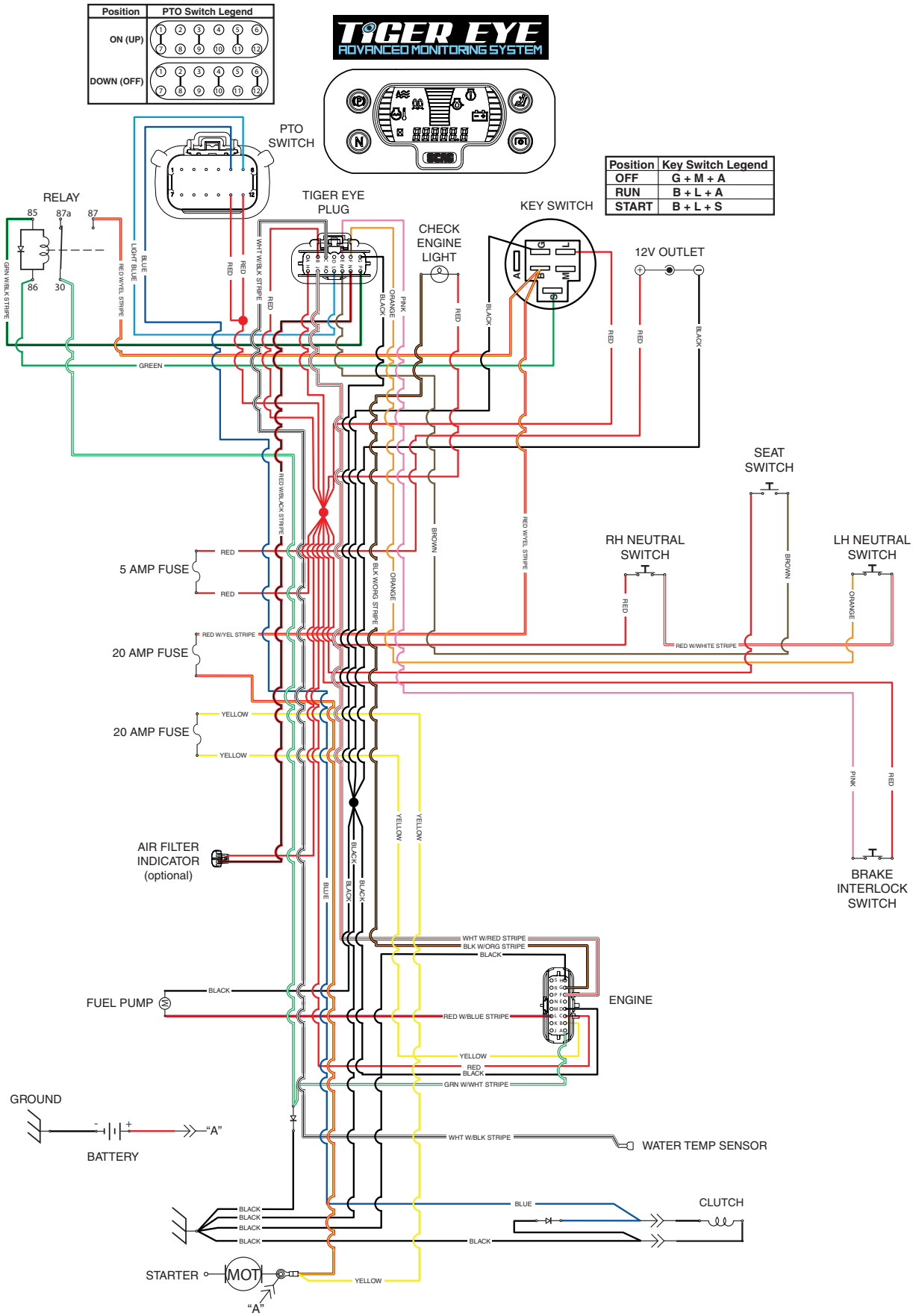

# ELECTRICAL SCHEMATIC - BRIGGS & STRATTON 31BV & 35BV

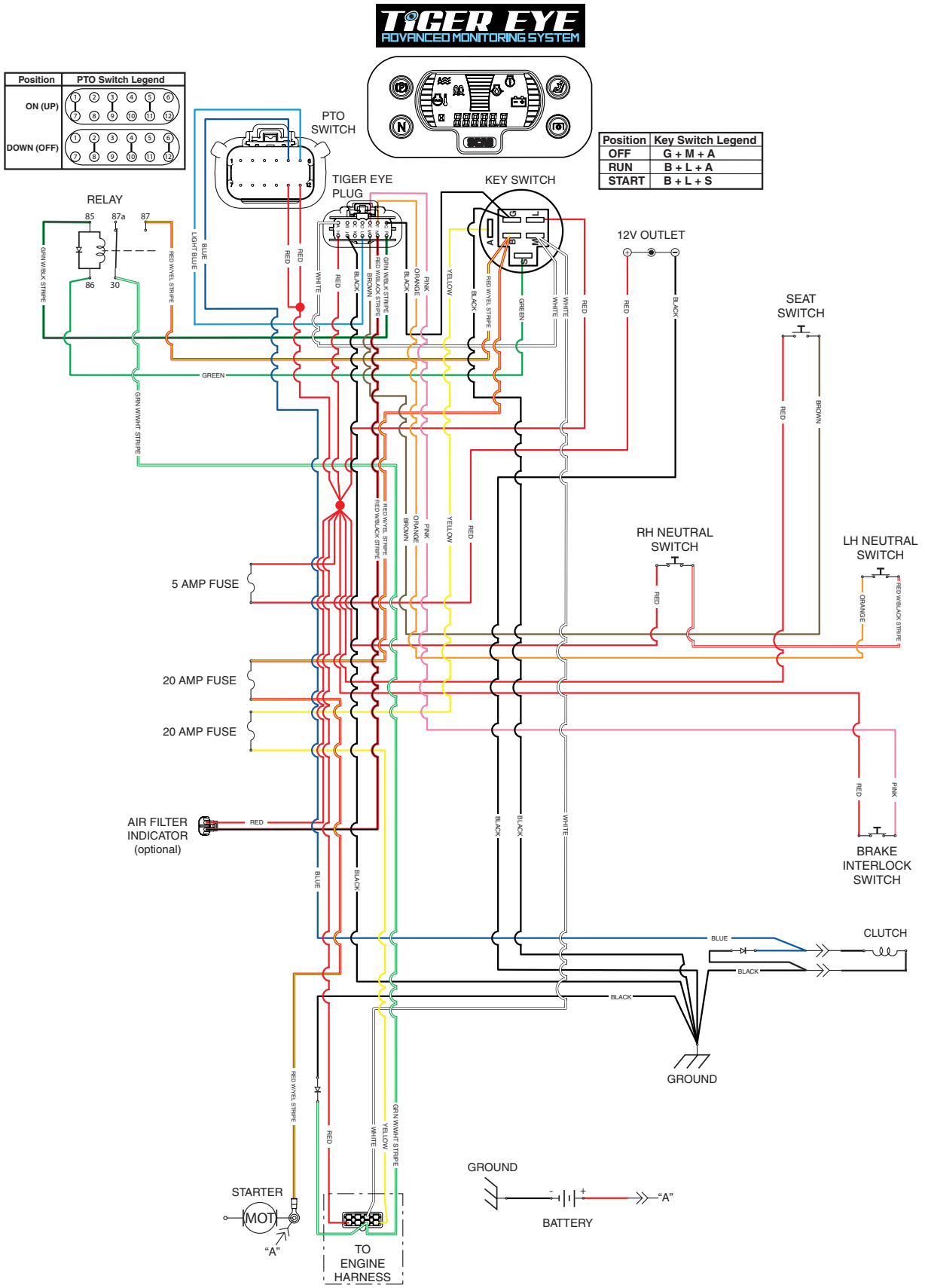

# ELECTRICAL SCHEMATIC - BRIGGS & STRATTON 37BV-EFI

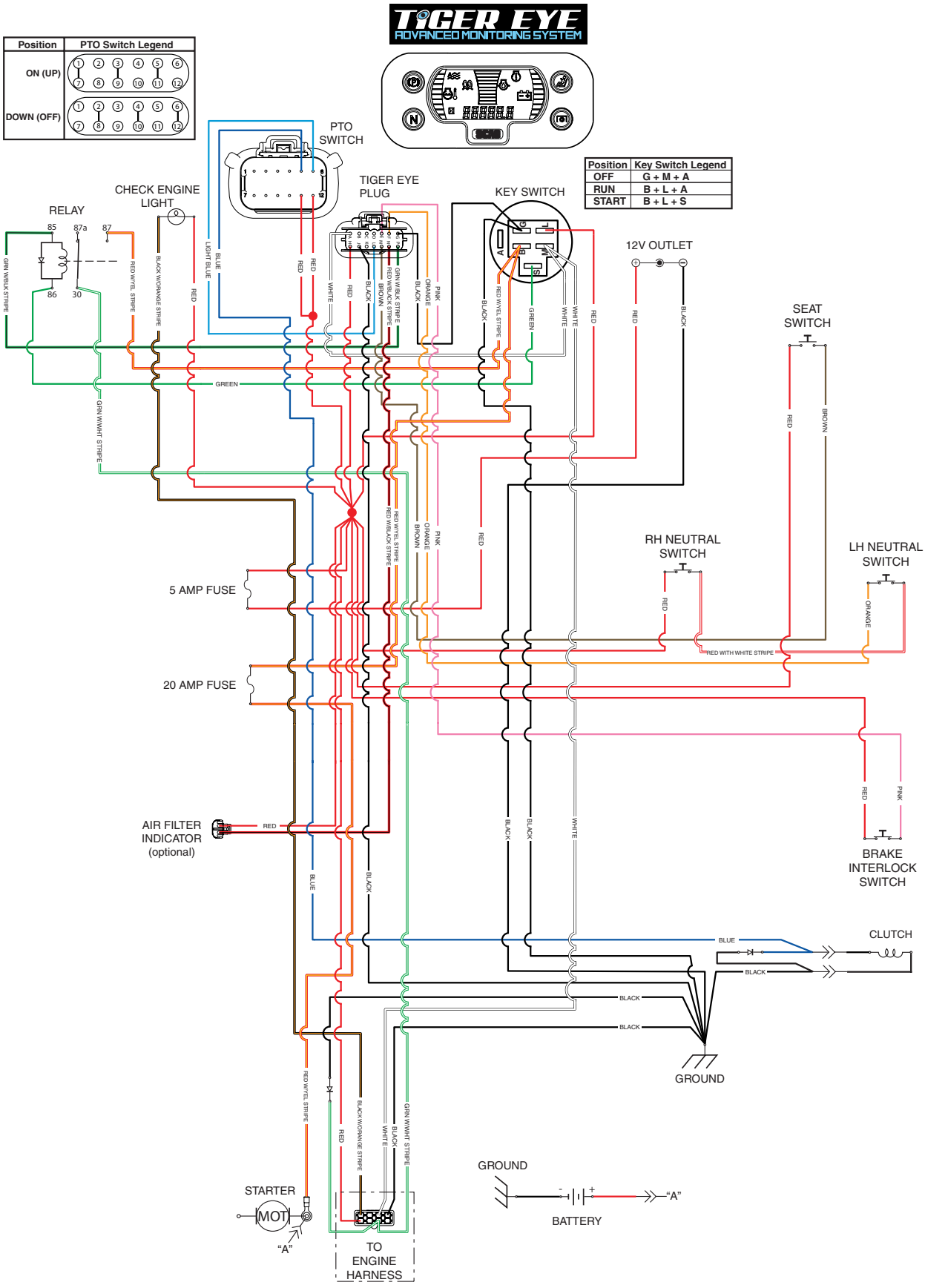

# LIMITED WARRANTY - COMMERCIAL EQUIPMENT

Any part of the Scag commercial mower manufactured by Scag Power Equipment and found, in the reasonable judgment of Scag, to be defective in materials or workmanship, will be repaired or replaced by an Authorized Scag Service Dealer without charge for parts and labor during the periods specified below. This warranty is limited to the original purchaser provided the product was purchased from an Authorized Scag Power Equipment Dealer and is not transferable. Proof of purchase will be required by the dealer to substantiate any warranty claims. All warranty work must be performed by an Authorized Scag Service Dealer.

This warranty is limited to the following specified periods from the date of the original retail purchase for defects in materials or workmanship:

- Wear items including drive belts, blades, hydraulic hoses and tires are warranted for ninety (90) days.
- Batteries are covered for ninety (90) days.
- Frame and structural components including oil reservoir and oil coolers are warranted for two (2) years (parts and labor) for commercial use or three (3) years / 500 hours (whichever comes first) (parts and labor) for non-commercial use.
- Cutter decks are warranted against cracking for a period of three (3) years. (parts and labor 1st and 2nd year; parts only 3rd year.) The repair or replacement of the cutter deck will be at the option of Scag Power Equipment. We reserve the right to request components for evaluation. This warranty does not cover any mower that has been subject to misuse, neglect, negligence, or accident, or that has been operated in any way contrary to the operating instructions as specified in the Operator's Manual.
- Engines and electric starters are covered by the engine manufacturer's warranty period.
- Major drive system components are warranted for two (2) years (parts and labor) for commercial use or three (3) year / 500 hour (whichever comes first) (parts and labor) for non-commercial use by Scag Power Equipment. (commercial and non-commercial warranty excludes fittings, hoses, drive belts). The repair or replacement of the hydraulic pump or hydraulic motor will be at the option of Scag Power Equipment. This warranty does not cover any mower that has been subject to misuse, neglect, negligence, or accident, or that has been operated in any way contrary to the operating instructions as specified in the Operator's Manual.
- Electric clutches have a Limited Warranty for two (2) years (parts and labor) for commercial use or three (3) year / 500 hours (whichever comes first) (parts and labor) for non-commercial use.
- Spindle assemblies have a Limited Warranty for three years (parts and labor 1st year and 2nd; parts only 3rd year).
- Any Scag product used for rental purposes is covered by a 90 day warranty.

The Scag mower, including any defective part must be returned to an Authorized Scag Service Dealer within the warranty period. The expense of delivering the mower to the dealer for warranty work and the expense of returning it to the owner after repair will be paid for by the owner. Scag's responsibility is limited to making the required repairs and no claim of breach of warranty shall be cause for cancellation or rescission of the contract of sale of any Scag mower. "Non-Commercial" use is defined as a single property owner, where the single property is the residence of the owner of the mower. If the mower is cutting more than the owners single property, it is deemed commercial use and the "non-commercial" warranty does not apply. Scag Power Equipment reserves the right to deny and / or void the non-commercial warranty if it believes it to be in commercial use.

This warranty does not cover any mower that has been subject to misuse, neglect, negligence, or accident, or that has been operated in any way contrary to the operating instructions as specified in the Operator's Manual. The warranty does not apply to any damage to the mower that is the result of improper maintenance, or to any mower or parts that have not been assembled or installed as specified in the Operator's Manual and Assembly Manual. The warranty does not cover any mower that has been altered or modified, changing performance or durability. In addition, the warranty does not extend to repairs made necessary by normal wear, or by the use of parts or accessories which, in the reasonable judgment of Scag, are either incompatible with the Scag mower or adversely affect its operation, performance or durability.

Scag Power Equipment reserves the right to change or improve the design of any mower without assuming any obligation to modify any mower previously manufactured. All other implied warranties are limited in duration to the two (2) year for commercial use, three (3) years / 500 hour for non-commercial use or ninety (90) days for mowers used for rental purpose. Accordingly, any such implied warranties including merchantability, fitness for a particular purpose, or otherwise, are disclaimed in their entirety after the expiration of the appropriate two year, three year / 500 hour or ninety day warranty period. Scag's obligation under this warranty is strictly and exclusively limited to the repair or replacement of defective parts and Scag does not assume or authorize anyone to assume for them any other obligation. Some states do not allow limitations on how long an implied warranty lasts, so the above limitation may not apply to you.

Scag assumes no responsibility for incidental, consequential or other damages including, but not limited to, expense for gasoline, expense of delivering the mower to an Authorized Scag Service Dealer and expense of returning it to the owner, mechanic's travel time, telephone or telegram charges, rental of a like product during the time warranty repairs are being performed, travel, loss or damage to personal property, loss of revenue, loss of use of the mower, loss of time or inconvenience. Some states do not allow the exclusion or limitation of incidental or consequential damages, so the above limitation or exclusion may not apply to you. This warranty gives you specific legal rights, and you may also have other rights which vary from state to state.

© 2020
Scag Power Equipment
Division of Metalcraft of Mayville, Inc.