SCAG®
POWER EQUIPMENT

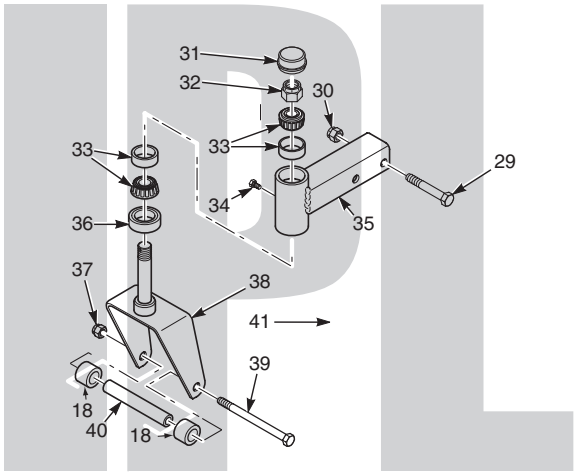

ILLUSTRATED PARTS MANUAL

Model STTII

TURF Tiger II

THIS MANUAL CONTAINS THE ILLUSTRATED PARTS LIST FOR MODELS:

STTII-52V-25CH-LP	**with a serial number of R0300001 to R0399999**
STTII-52V-31BV	**with a serial number of R2400001 to R2499999**
STTII-61V-25CH-LP	**with a serial number of R0500001 to R0599999**
STTII-61V-25KBD	**with a serial number of R0600001 to R0699999**
STTII-61V-31BV	**with a serial number of R2500001 to R2599999**
STTII-61V-31DFI	**with a serial number of R0800001 to R0899999**
STTII-61V-35BV	**with a serial number of R0900001 to R0999999**
STTII-61V-37BV-EFI	**with a serial number of R1000001 to R1099999**
STTII-72V-25KBD	**with a serial number of R1100001 to R1199999**
STTII-72V-31DFI	**with a serial number of R1200001 to R1299999**
STTII-72V-37BV-EFI	**with a serial number of R1400001 to R1499999**

© 2020
Scag Power Equipment
Division of Metalcraft of Mayville, Inc.

Part No. 06348
Printed 11/19
Printed in USA

Table of Contents

SECTION 1 - ILLUSTRATED PARTS LIST 2
SCAG APPROVED ATTACHMENTS AND ACCESSORIES 2
STTII 52V CUTTER DECK 4
STTII 61V & 72V CUTTER DECKS 6
STTII CUTTER DECK CONTROLS 8
STTII SHEET METAL COMPONENTS 10
STTII ROLL-OVER PROTECTION SYSTEM 12
STTII SUSPENSION SEAT 14
STTII DECK DRIVE COMPONENTS 16
STTII ENGINE AND ATTACHING PARTS - AIR COOLED (GASOLINE) 18
STTII ENGINE & ATTACHING PARTS - LIQUID COOLED (GASOLINE) 20
STTII ENGINE & ATTACHING PARTS - KOHLER 25CH-LP-EFI 22
STTII ENGINE & ATTACHING PARTS - KUBOTA DIESEL 24
STTII BRAKE COMPONENTS 26
STTII STEERING COMPONENTS 28
STTII HYDRAULIC SYSTEM 30
STTII FUEL SYSTEM - GASOLINE ENGINES 32
STTII FUEL SYSTEM - KOHLER 25CH-LP-EFI 34
STTII FUEL SYSTEM - KUBOTA DIESEL 36
BDP-16A HYDRAULIC PUMP ASSEMBLY WITH COOLING FAN 38
STTII ELECTRICAL SYSTEM - GASOLINE & LP ENGINES 40
STTII ELECTRICAL SYSTEM - KUBOTA DIESEL 42
REPLACEMENT DECALS AND INFORMATION PLATES 44
ELECTRICAL SCHEMATIC - KOHLER EFI (LP) 46
ELECTRICAL SCHEMATIC - KUBOTA 25KBD 47
ELECTRICAL SCHEMATIC - KAWASAKI 31DFI 48
ELECTRICAL SCHEMATIC - BRIGGS & STRATTON 31BV & 35BV 49
ELECTRICAL SCHEMATIC - BRIGGS & STRATTON 37BV-EFI 50

ILLUSTRATED PARTS LIST

SCAG APPROVED ATTACHMENTS AND ACCESSORIES

Attachments and accessories manufactured by companies other than Scag Power Equipment are not approved for use on this machine.

Scag approved attachments and accessories:

- GC-3B (p/n 901S) - Requires a 901R (52 STTII Install Kit) or 900X (61 STTII/SCZ Install Kit)
- GC-CS* (p/n 901T) - Requires a 901R (52 STTII Install Kit) or 900X (61 STTII/SCZ Install Kit)

  *GC-CS (p/n 901T) - Not applicable to machines equipped with LP engines.
- Mulch Plate (52,61,72)(p/n 9287, 9288, 920F)
- Hurricane Mulch (52,61,72)(p/n 9284, 9285, 920E)
- STTII-OCDC-52V (p/n 923C)
- SCZ/STT/STTII-OCDC-61V (p/n 923D)
- SZL / SFZ / SPZ / STT/STTII Hitch (p/n 9242)
- STT Bumper (p/n 9256)
- STTII Lights (p/n 923E)
- STTII LED Lights (p/n 923Y)
- Tiger Striper (p/n 923G) - Requires a 923H Install Kit
- Air Filter Indicator (922U)
- Blade Buddy (p/n 9212)

Scag Premium Lubricants:

- Chassis Grease (p/n 486257)
- Spindle Grease (p/n 486258)
- 20W50 Oil - Gallon (p/n 486254)
- 20W50 Oil - Quart (p/n 486255)
- 75W90 Gear Lubricant (p/n 486578)

NOTES

STTII 52V CUTTER DECK

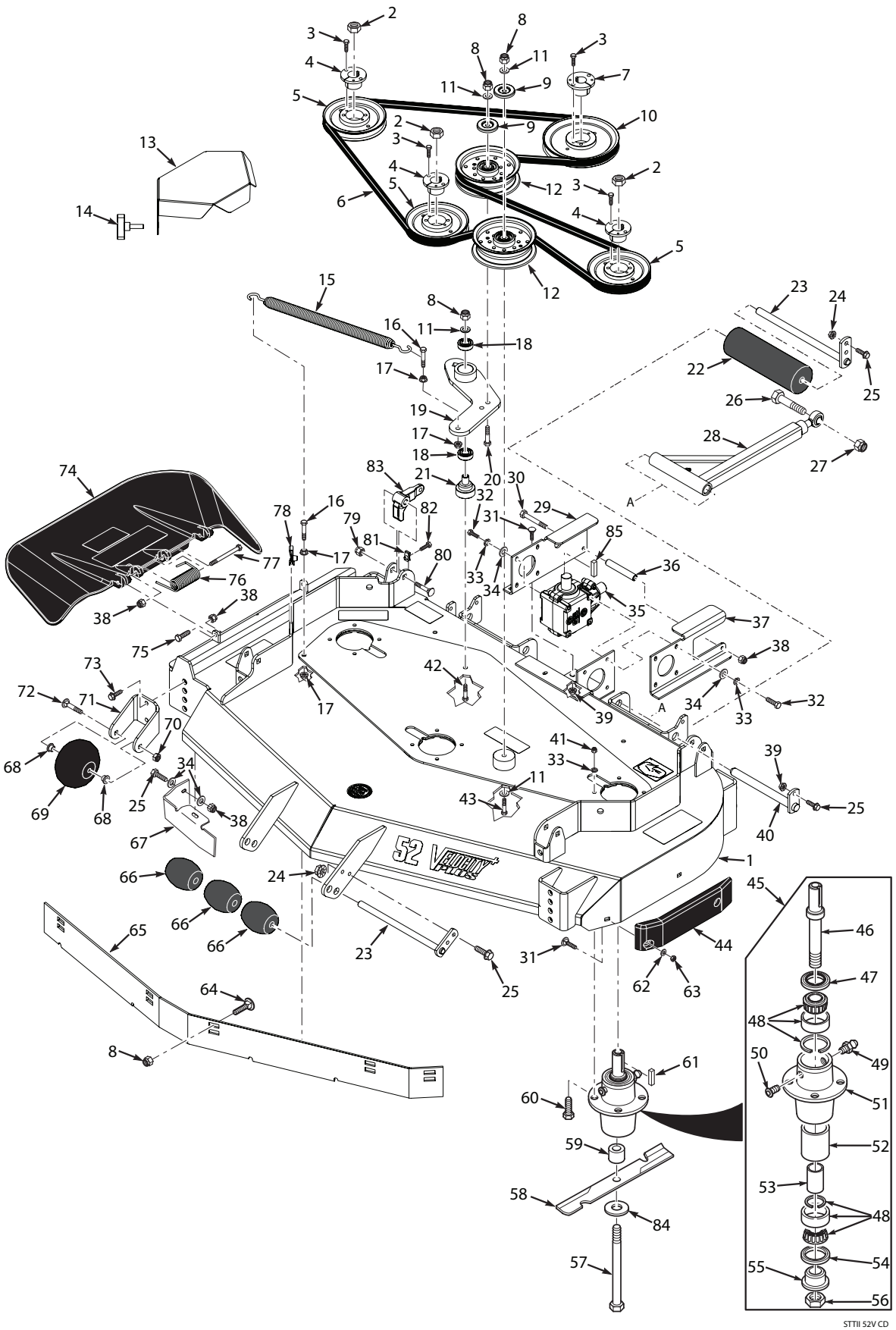

STTII 52V CUTTER DECK

Ref. No.	Part No.	Description
1	463226	Cutter Deck w/Decals - 52V
2	04020-09	Nut, 5/8-11 UNC
3	04001-172	Bolt, Hex Head 1/4-20 x 1" Grade 8
4	48926	Tapered Hub, 1-1/8" Bore
5	482744	Pulley, 5.75 O.D.
6	482281	Belt, Cutter Deck Drive
7	48141	Tapered Hub, 1" Bore
8	04021-09	Nut, Elastic Stop 3/8-16
9	424367	Dust Shield
10	482747	Pulley, 6.95 O.D.
11	04043-04	Flatwasher, 3-8/.391 x .938 x .105 HD
12	483215	Pulley, Idler
13	428245	Belt Cover LH
	428246	Belt Cover RH
14	481625-01	Knob w/Stud
15	483704	Spring
16	04001-136	Bolt, Hex Head 3/8-16 x 1-1/2" Grade 8
17	04019-04	Nut, Serrated Flange 3/8-16
18	48224	Bearing
19	461842	Idler Arm Weldment (incl.#18)
20	04001-22	Bolt, Hex Head 3/8-16 x 2-3/4"
21	43681	Pivot, Idler
22	48038	Guide Roller
23	45944	Roller Shaft
24	04117-01	Nut, Elastic Stop Flange 5/16-18
25	04001-09	Bolt, Hex Head 5/16-18 x 1"
26	04001-79	Bolt, Hex Head 5/8-11 x 4-1/2"
27	04021-13	Nut, Elastic Stop 5/8-11
28	461516	Pusharm Assy.
29	428027	Mounting Plate
30	04001-154	Bolt, Hex Head 5/16-18 x 4-3/4"
31	04003-12	Bolt, Carriage 5/16-18 x 3/4"
32	04001-09	Bolt, Hex Head 5/16-18 x 1"
33	04030-03	Lockwasher, 5/16"
34	04040-15	Flatwasher, 5/16-.375 x .875 x .083
35	482486	Gearbox
36	43763	Spacer
37	428026	Mounting Plate
38	04021-10	Nut, Elastic Stop 5/16-18
39	04019-03	Nut, Serrated Flange 5/16-18
40	451240	Shaft Weldment, Pusharm
41	04021-22	Nut, Elastic Stop 5/16-18 Grade 8
42	04001-54	Bolt, Hex Head 3/8-16 x 3"
43	04001-51	Bolt, Hex Head 3/8-16 x 3-3/4"
44	483176	Pad, Deck Wear

Ref. No.	Part No.	Description
45	461663	Spindle Assembly (INCL 33,41,60)
46	43589	Shaft, Spindle
47	481024	Seal, Top
48	481022	Bearing Assembly
49	48114-04	Grease Fitting
50	48677	Relief Fitting, Tapered Spindle
51	43644	Spindle Housing
52	43312	Spacer, Outside
53	43296	Spacer, Inside
54	481025	Seal Bottom
55	43297	Spindle Bushing, Bottom
56	481035	Nut, Special 1-1/16 - 18
57	04001-41	Bolt, Hex Head 5/8-11 x 9-1/2"
58	482878	Cutter Blade, 18"
59	43590	Spacer, Spindle Bottom
60	04001-176	Bolt, 5/16-18 x 1-3/4" Grade 8
61	04063-08	Key, 1/4 x 1/4 x 2"
62	04040-04	Flatwasher, 5/16-.344 x .688 x .065
63	04021-04	Nut, Center Lock 5/16-18
64	04003-23	Bolt, Carriage 3/8-16 x 1"
65	424840	Baffle, Custom Cut - 52V
66	482295	Wheel, Anti-Scalp
67	424677	Baffle, Turbo
68	48100-15	Bushing, .376 I.D. Oilite
69	481632	Anti-Scalp Wheel
70	04021-05	Nut, Center Lock 3/8-16
71	422478	Bracket, Anti-Scalp
72	04003-26	Bolt, Carriage 3/8-16 x 4"
73	04017-27	Bolt, Hex Head Serrated Flange 3/8-16 x 1"
74	461845	Discharge Chute Assy.
	*462475	Discharge Chute Assy. (CA)
75	04001-12	Bolt, Hex Head 5/16-18 x 1-3/4"
76	483378	Spring, Discharge Chute
77	04001-154	Bolt, Hex Head 5/16-18 x 4-3/4"
78	04110-04	U-Nut, 3/8-16
79	04021-11	Nut, Elastic Stop 7/16-14
80	04003-42	Bolt, Carriage 7/16-14 x 2-1/4"
81	04110-03	U-Nut, 3/8-16 (short)
82	04107-04	Bolt, Hex Head 3/8-16 x 2" Special
83	485528	Lever, Deck Level
84	04043-06	Flatwasher, 5/8-.688 x 1.75 x .134 HD
85	04063-01	Key, 1/4 x 1/4 x 1-1/4"

* = California Models Only (not shown)

STTII 61V & 72V CUTTER DECKS

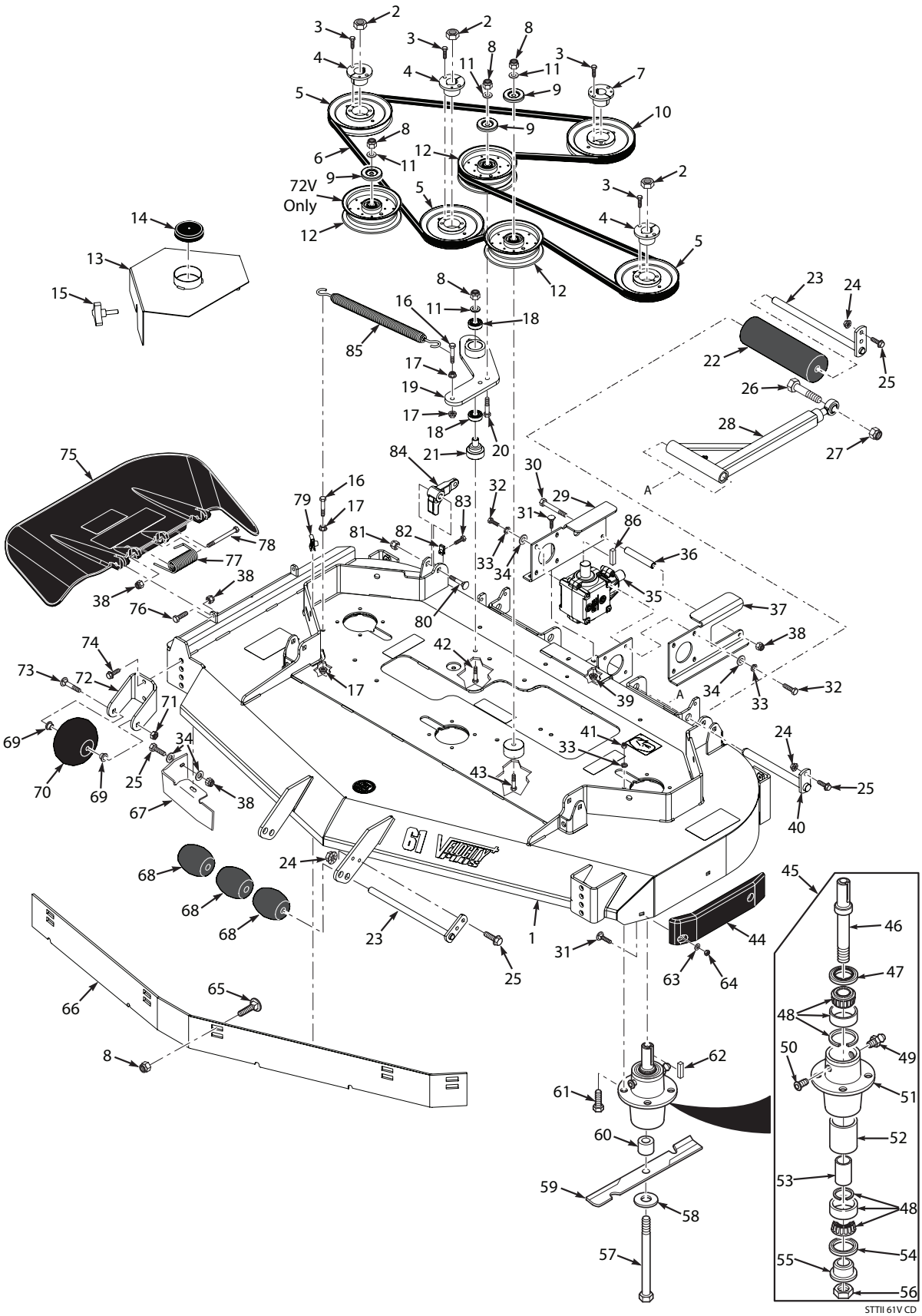

STTII 61V & 72V CUTTER DECKS

Ref. No.	Part No.	Description	61	72
1	463227	Cutter Deck w/Decals - 61V	x	
	463228	Cutter Deck w/Decals - 72V		x
2	04020-09	Nut, 5/8-11 UNC	x	x
3	04001-172	Bolt, Hex Head 1/4-20 x 1" Grade 8	x	x
4	48926	Tapered Hub, 1-1/8" Bore	x	x
5	482745	Pulley, 6.35 O.D.	x	
	482747	Pulley, 6.95 O.D.		x
6	481558	Belt, Deck Drive - 61V	x	
	481980	Belt, Deck Drive - 72V		x
7	48141	Tapered Hub, 1" Bore	x	x
8	04021-09	Nut, Elastic Stop 3/8-16	x	x
9	424367	Dust Shield	x	x
10	482746	Pulley, 6.75 O.D.	x	
	482745	Pulley, 6.35 O.D.		x
	482744	Pulley, 5.75 O.D. (72V-25KBD)		x
11	04043-04	Flatwasher, 3/8-.391 x .938 x .105 HD	x	x
12	483215	Pulley, Idler	x	x
13	463175	Belt Cover, 61V (incl. #14)	x	
	463176	Belt Cover, LH 72V (inc.#14)		x
	463177	Belt Cover, RH 72V (inc#14)		x
14	484368	Cap, Spindle	x	x
15	481625-01	Knob w/Stud	x	x
16	04001-136	Bolt, Hex Head 3/8-16 x 1-1/2" Grade 8	x	x
17	04019-04	Nut, Serrated Flange 3/8-16	x	x
18	48224	Bearing	x	x
19	461842	Idler Arm Assy. (incl. #18)	x	x
20	04001-22	Bolt, Hex Head 3/8-16 x 2-3/4"	x	x
21	43681	Pivot, Idler	x	x
22	48038	Guide Roller	x	x
23	45944	Roller Shaft	x	x
24	04117-01	Nut, Lock w/ Flange 5/16-18	x	x
25	04001-09	Bolt, Hex Head 5/16-18 x 1"	x	x
26	04001-79	Bolt, Hex Head 5/8-11 x 4-1/2"	x	x
27	04021-13	Nut, Elastic Stop 5/8-11	x	x
28	461516	Pusharm Assy.	x	x
29	428027	Mounting Plate	x	x
30	04001-154	Bolt, Hex Head 5/16-18 x 4-3/4"	x	x
31	04003-12	Bolt, Carriage 5/16-18 x 3/4"	x	x
32	04001-09	Bolt, Hex Head 5/16-18 x 1"	x	x
33	04030-03	Lockwasher, 5/16"	x	x
34	04040-15	Flatwasher, 5/16-.375 x .875 x .083	x	x
35	482486	Gearbox		
36	43763	Spacer	x	x
37	428026	Mounting Plate	x	x
38	04021-10	Nut, Elastic Stop 5/16-18	x	x
39	04019-03	Nut, Serr. Flange 5/16-18	x	x
40	451240	Shaft Weldment, Pusharm	x	x
41	04021-22	Nut, Elastic Stop 5/16-18 Grade 8	x	x
42	04001-54	Bolt, Hex Head 3/8-16 x 3"	x	x
43	04001-51	Bolt, Hex Head 3/8-16 x 3-3/4"	x	x

Ref. No.	Part No.	Description	61	72
44	483176	Pad, Deck Wear	x	
	483174	Pad, Deck Wear		x
45	461663	Spindle Assembly (INCL 33,41,61)	x	x
46	43589	Shaft, Spindle	x	x
47	481024	Seal, Top	x	x
48	481022	Bearing Assembly	x	x
49	48114-04	Grease Fitting	x	x
50	48677	Relief Fitting, Tapered Spindle	x	x
51	43644	Spindle Housing	x	x
52	43312	Spacer, Outside	x	x
53	43296	Spacer, Inside	x	x
54	481025	Seal, Bottom	x	x
55	43297	Spindle Bushing, Bottom	x	x
56	481035	Nut, Special 1-1/16 - 18	x	x
57	04001-41	Bolt, Hex Head 5/8-11 x 9-1/2	x	x
58	04043-06	Flatwasher, 5/8-.688 x 1.75 x .134 HD	x	x
59	482879	Cutter Blade, 21"	x	
	482881	Cutter Blade, 21" (31BV, 35BV &37BV-EFI)	x	
	482882	Cutter Blade, 24-1/2"		x
60	43590	Spacer, Spindle Bottom	x	x
61	04001-176	Bolt, Hex Head 5/16-18 x 1-3/4" Grade 8	x	x
62	04063-08	Key, 1/4 x 1/4 x 2"	x	x
63	04040-04	Flatwasher, 5/16-.344 x .688 x .065	x	x
64	04021-04	Nut, Center Lock 5/16-18	x	x
65	04003-23	Bolt, Carriage 3/8-16 x 1"	x	x
66	424841	Baffle, Custom Cut - 61V		x
	424917	Baffle, Custom Cut - 72V	x	
67	424209	Baffle, Turbo - 61V	x	
	*425625	Baffle, Turbo - 61V (CA)		x
	424856	Baffle, Turbo - 72V		x
	*423958	Baffle, Turbo - 72V (CA)	x	x
68	482295	Wheel, Anti-Scalp	x	x
69	48100-15	Bushing, .376 I.D. Oilite	x	x
70	481632	Anti-Scalp Wheel	x	x
71	04021-05	Nut, Center Lock 3/8-16	x	x
72	422478	Bracket, Anti-Scalp	x	x
73	04003-26	Bolt, Carriage 3/8-16 x 4"	x	x
74	04017-27	Bolt, Hex Head Serr. Flange 3/8-16 x 1"	x	x
75	461846	Discharge Chute Assy.	x	
	*462477	Discharge Chute Assy. (CA)		x
	462132	Discharge Chute Assy.		x
	*462478	Discharge Chute Assy. (CA)	x	x
76	04001-12	Bolt, Hex Head 5/16-18 x 1-3/4"	x	x
77	483378	Spring, Discharge Chute	x	x
78	04001-154	Bolt, Hex Head 5/16-18 x 4-3/4"	x	x
79	04110-04	U-Nut, 3/8-16	x	x
80	04003-42	Bolt, Carriage 7/16-14 x 2-1/4"	x	x
81	04021-11	Nut, Elastic Stop 7/16-14	x	x
82	04110-03	U-Nut, 3/8-16 (short)	x	x
83	04107-04	Bolt, Hex Head 3/8-16 x 2" Special	x	x
84	485528	Lever, Deck Level	x	x
85	483704	Spring	x	x
86	04063-01	Key, 1/4 x 1/4 x 1-1/4"	x	x

* = California Models Only (not shown)

STTII CUTTER DECK CONTROLS

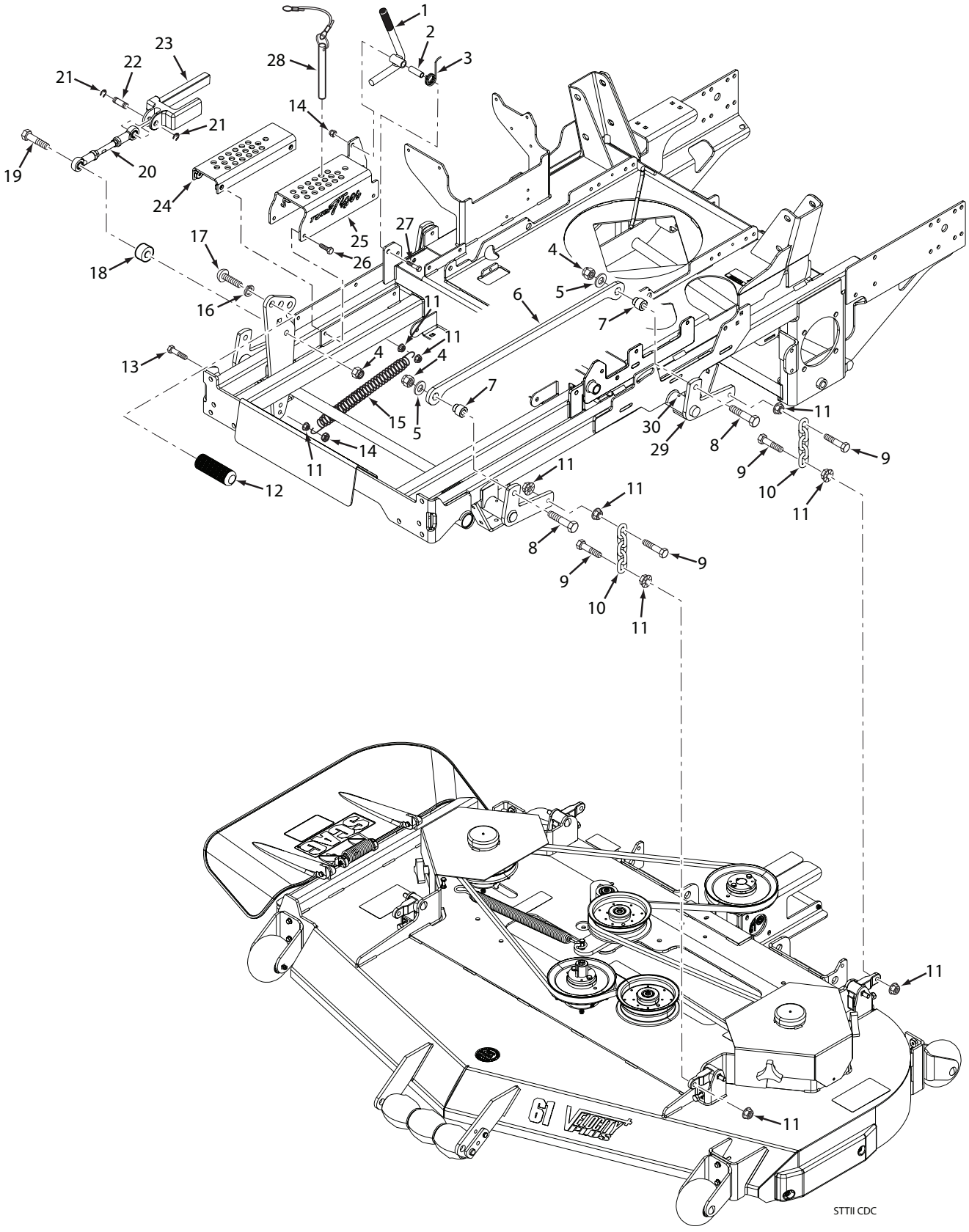

STTII CUTTER DECK CONTROLS

Ref. No.	Part No.	Description
1	462856	Deck Latch Weldment w/Grip
	481477	Grip
2	43668	Spacer, Deck Latch
3	484191	Spring, Torsion Lever Return
4	04021-07	Nut, Elastic Stop 1/2-13
5	04040-13	Flatwasher, 1/2-.562 x 1.375 x .109
6	428108	Link, Deck Lift
7	431018	Pivot, Deck Link
8	04001-153	Bolt, Hex Head 1/2-13 x 2-1/4”
9	04001-20	Bolt, Hex Head 3/8-16 x 1-1/2”
10	48540	Chain
11	04019-04	Nut, Serrated Flange 3/8-16
12	424504	Pedal, Foot
13	04001-136	Bolt, Hex Head 3/8-16 x 1-1/2” Grade 8
14	04021-05	Nut, Center Lock 3/8-16
15	486474	Spring, Ext. Deck Lift
16	04030-07	Lockwasher, 5/8”
17	04108-04	Capscrew, 5/8-11 x 1-1/2”
18	43508	Spacer
19	04001-72	Bolt, Hex Head 1/2-13 x 2”
20	482534	Linkage, Deck Lift
21	04050-18	Retaining Ring, 1/2” Ext. “E”
22	43487	Pin, Deck Lift
23	462872	Slide Assembly (INCL. #20,21,22)
	485570	Slide, Height Adjust
24	453099	Weldment, Lower Cutting Height
25	428237	Adjustment Bracket, Cutting Height Upper
26	04006-02	Bolt, Hex Head 5/16-18 x 1-1/4”
	04013-03	Bolt, Hex Head 5/16-18 x 3/4” (Outside Rear)
	04019-03	Nut, Serrated Flange 5/16-18 (Outside Rear)
27	04001-46	Bolt, Hex Head 3/8-16 x 2-1/4”
28	483345	Ring Pin Assy., w/Lanyard
29	452744	Lift Bellcrank, LH Rear
	452745	Lift Bellcrank, RH Rear
*	04041-14	Flatwasher, 1”, 1.062 x 1.5 x .0478 (Rear Bellcrank Mounting)
*	04050-08	Ret Ring 1” (Rear Bellcrank Mounting)
30	48114-04	Grease Fitting 1/4-28 Self Tap

* = Item Not Shown

STTII SHEET METAL COMPONENTS

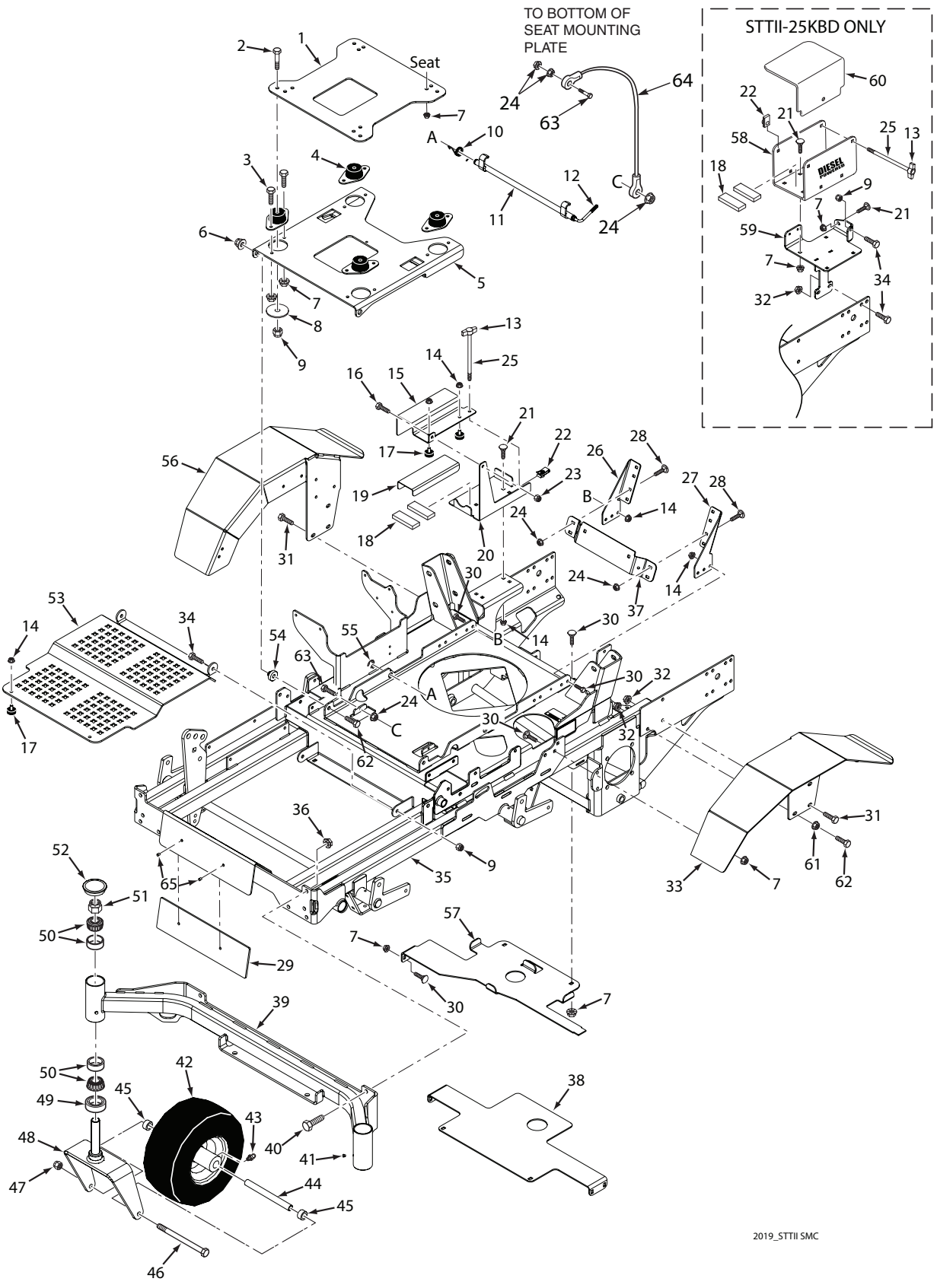

STTII SHEET METAL COMPONENTS

Ref. No.	Part No.	Description
1	463224	Mounting Plate, Seat w/Decal
2	04001-46	Bolt, Hex Head 3/8-16 x 2-1/4”
3	04001-08	Bolt, Hex Head 5/16-18 x 3/4”
4	484148	Isolator, Seat
5	463225	Seat Mounting Plate, Lower w/Decals
6	04117-02	Nut, Flange Elastic Stop Nut, 3/8-16
7	04019-03	Nut, Serrated Flange 5/16-18
8	04041-38	Flatwasher, 3/8-.406 x 2.25 x .1875
9	04021-09	Nut, Elastic Stop 3/8-16
10	485599	Spring, Seat Latch
11	462841	Lever Assy., Seat Release (incl. #12)
12	484341	Grip
13	485698-01	Knob, 1/4” Wing
14	04019-03	Nut, Serrated Flange 5/16-18
15	463232	Cover, Battery Box w/ Decal (Gas & LP)
16	04001-08	Bolt, Hex Head 5/16-18 x 3/4”
17	481284	Bumper, Rubber
18	48661	Pad, Rubber
19	485692	Insulation, Battery Cover (Gas & LP Only)
20	427098	Battery Box (Gas & LP Only)
21	04003-12	Bolt, Carriage 5/16-18 x 3/4”
22	04110-01	U-Nut, 1/4-20
23	04021-10	Nut, Elastic Stop 5/16-18
24	04019-02	Nut, Serrated Flange 1/4-20
25	04001-221	Bolt, Hex Head 1/4-20 x 8”
26	428197	Mounting Bracket, Cooler - RH
27	428196	Mounting Bracket, Cooler - LH
28	04003-02	Bolt, Carriage 1/4-20 x 3/4”
29	428191	Backing Plate
30	04003-12	Bolt, Carriage 5/16-18 x 3/4”
31	04017-27	Bolt, Hex Head Serrated Flange 3/8-16 x 1”
32	04132-02	Threaded Insert, 3/8-16
33	452733	Fender, LH
34	04001-19	Bolt, Hex Head 3/8-16 x 1”
35	463223	Mainframe Assy., w/Decals
36	04117-05	Nut, 7/16-14 Flange Elastic Stop
37	427051	Bracket, Carbon Canister
	428203	Bracket, Carbon Canister (31DFI)
38	428023	Front Support, Fuel Tank
39	453102	Caster Support Weldment - 52V
	453103	Caster Support Weldment - 61V
	453104	Caster Support Weldment - 72V
40	04001-28	Bolt, Hex Head 7/16-14 x 1-1/4”

Ref. No.	Part No.	Description
41	482028-01	Plug, Grease Hole
42	9278	Wheel Assembly (incl. #43)
	482621	Bearing
	482622	Seal
43	48114-07	Grease Fitting
44	43583	Sleeve, Caster Wheel
45	43584	Spacer, Caster Wheel
46	04001-167	Bolt, Hex Head 1/2-13 x 9-1/2”
47	04021-07	Nut, Elastic Stop 1/2-13
48	453110	Yoke Weldment
49	481025	Seal, 2” O.D. x 1.625 Bore
50	48668	Bearing Assembly
51	04021-20	Nut, Jam 1” - 14
52	484195	Cap, Grease
53	428025	Foot Plate
54	431013	Sleeve, Seat Base Mounting
55	04050-01	Retaining Ring, .625 Ext. “E”
56	452734	Fender, RH
57	428024	Rear Support, Fuel Tank
58	463320	Battery Box w/Decal (Diesel Only)
59	453112	Battery Bracket Weldment (Diesel Only)
60	428257	Cover, Battery (Diesel Only)
	481780	Insulation, Battery Cover (Not Shown)
61	04019-04	Nut, Elastic Stop 3/8-16
62	04001-20	Bolt, Hex Head 3/8-16 x 1-1/2”
63	04001-59	Bolt, Hex Head 1/4-20 x 1-1/4”
64	48566	Seat Stop Cable
65	04090-03	Pop Rivet, 3/16 x .402

STTII ROLL-OVER PROTECTION SYSTEM

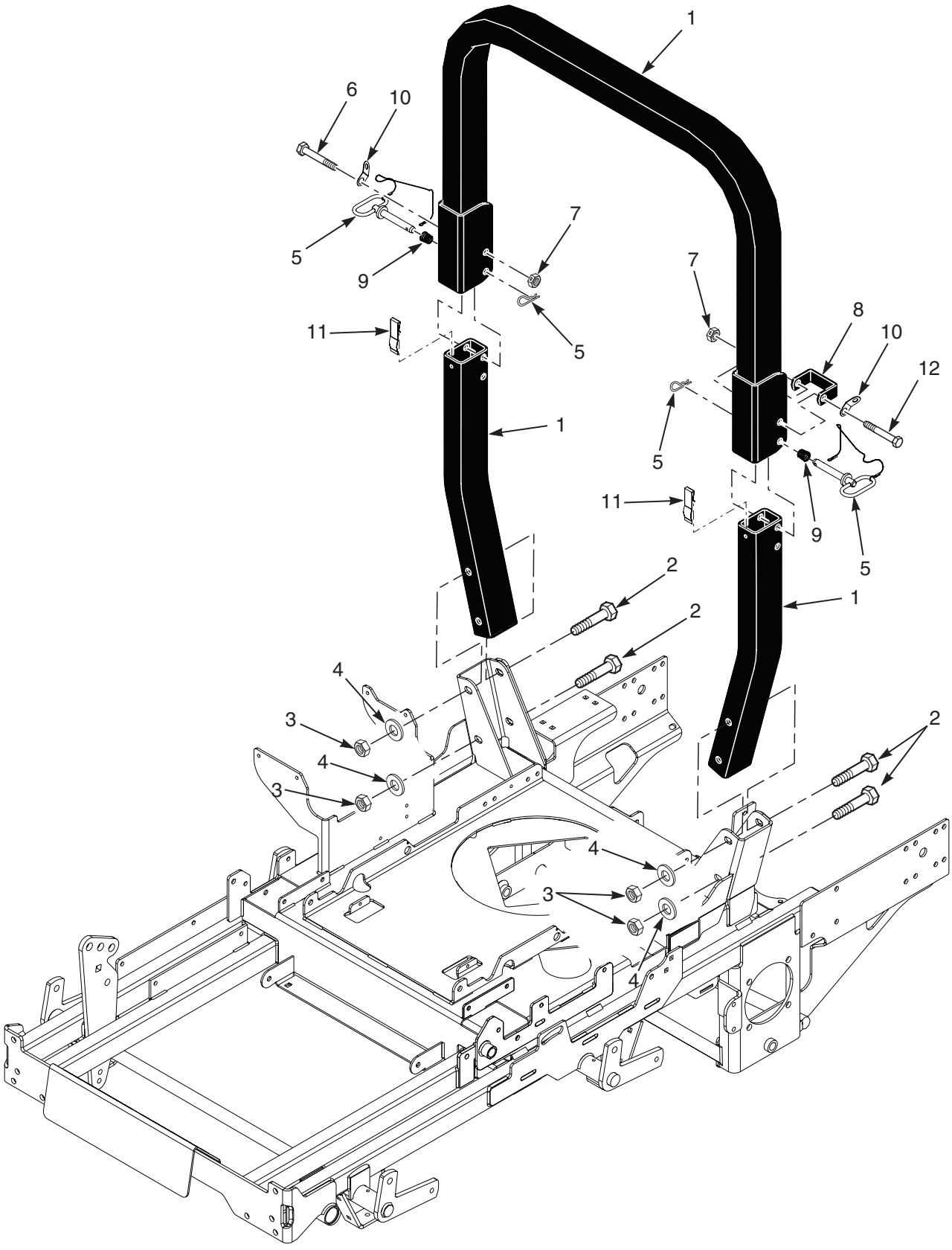

STTII ROLL-OVER PROTECTION SYSTEM

Ref. No.	Part No.	Description
1	462210	STT, ROPS Assembly
2	04001-194	Bolt, Hex Head 1/2-13 x 4-1/4”
3	04021-19	Nut, Center Lock 1/2-13
4	04040-13	Flatwasher, 1/2-.562 x 1.375 x .109
5	484168	Pin Assembly, ROPS Hinge (incl. #9, #10)
6	04001-90	Bolt, Hex Head 1/2-13 x 3-1/4”
7	04021-07	Nut, Elastic Stop 1/2-13
8	426952	Stop, ROPS
9	484170	Spring, ROPS
10	484169	Clip, ROPS
11	484167	Spring, ROPS
12	04001-163	Bolt, Hex Head 1/2-13 x 3-3/4”

STTII SUSPENSION SEAT

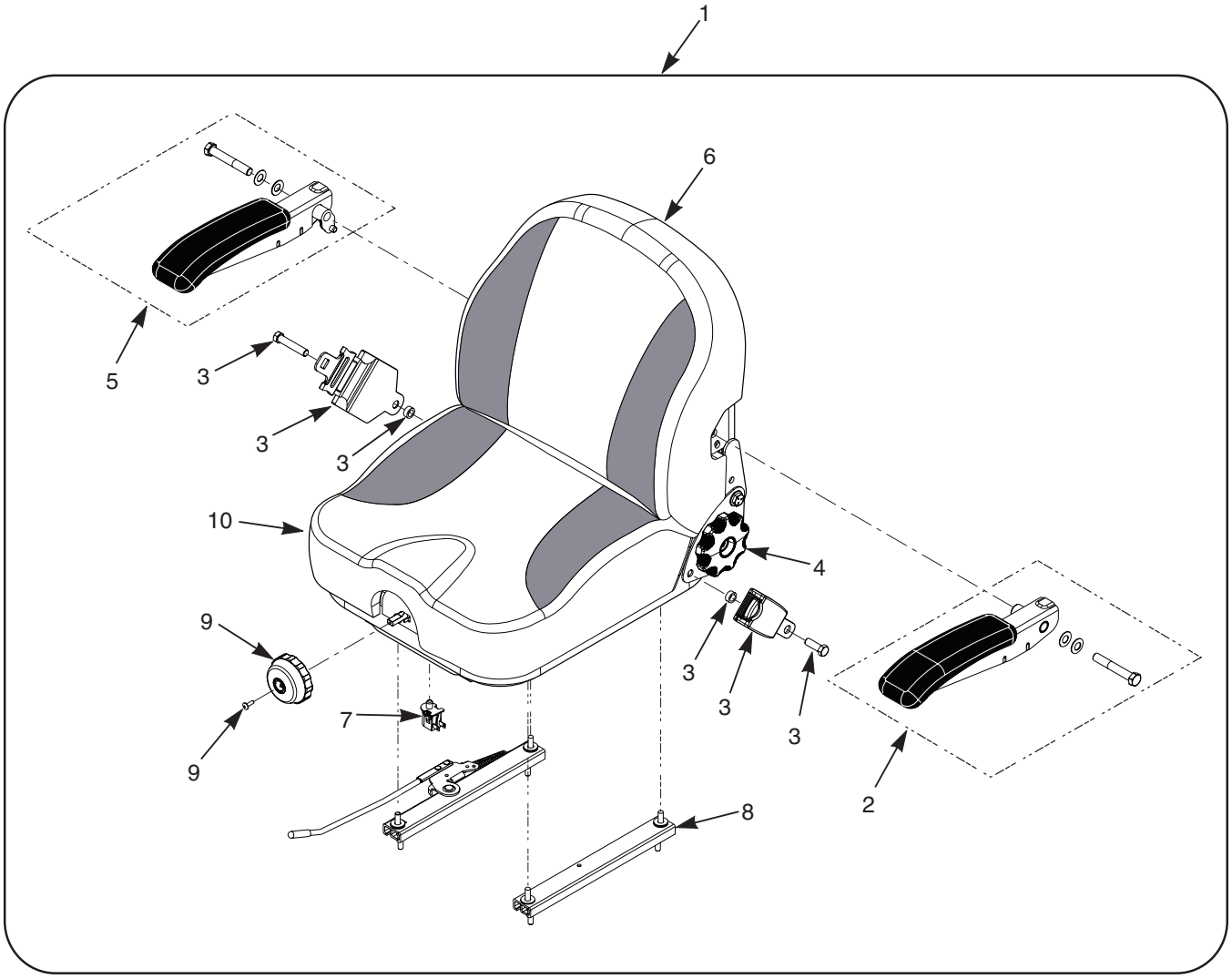

STTII SUSPENSION SEAT

Ref. No.	Part No.	Description
1	486591	Suspension Seat Assembly w/seat belt
2	484709	Armrest Kit, LH
3	484717	Seat Belt Kit
4	485652	Recliner Knob Kit
5	484710	Armrest Kit, RH
6	486596	Cover, Back Cushion
7	481638	Seat Switch
8	485594	Track Kit, (Includes Handle Kit p/n 485717)
9	484714	Suspension Knob Kit
10	486597	Cover, Seat Cushion
11	*484719	Bellows (Track Cover)

* = Item Not Shown

STTII DECK DRIVE COMPONENTS

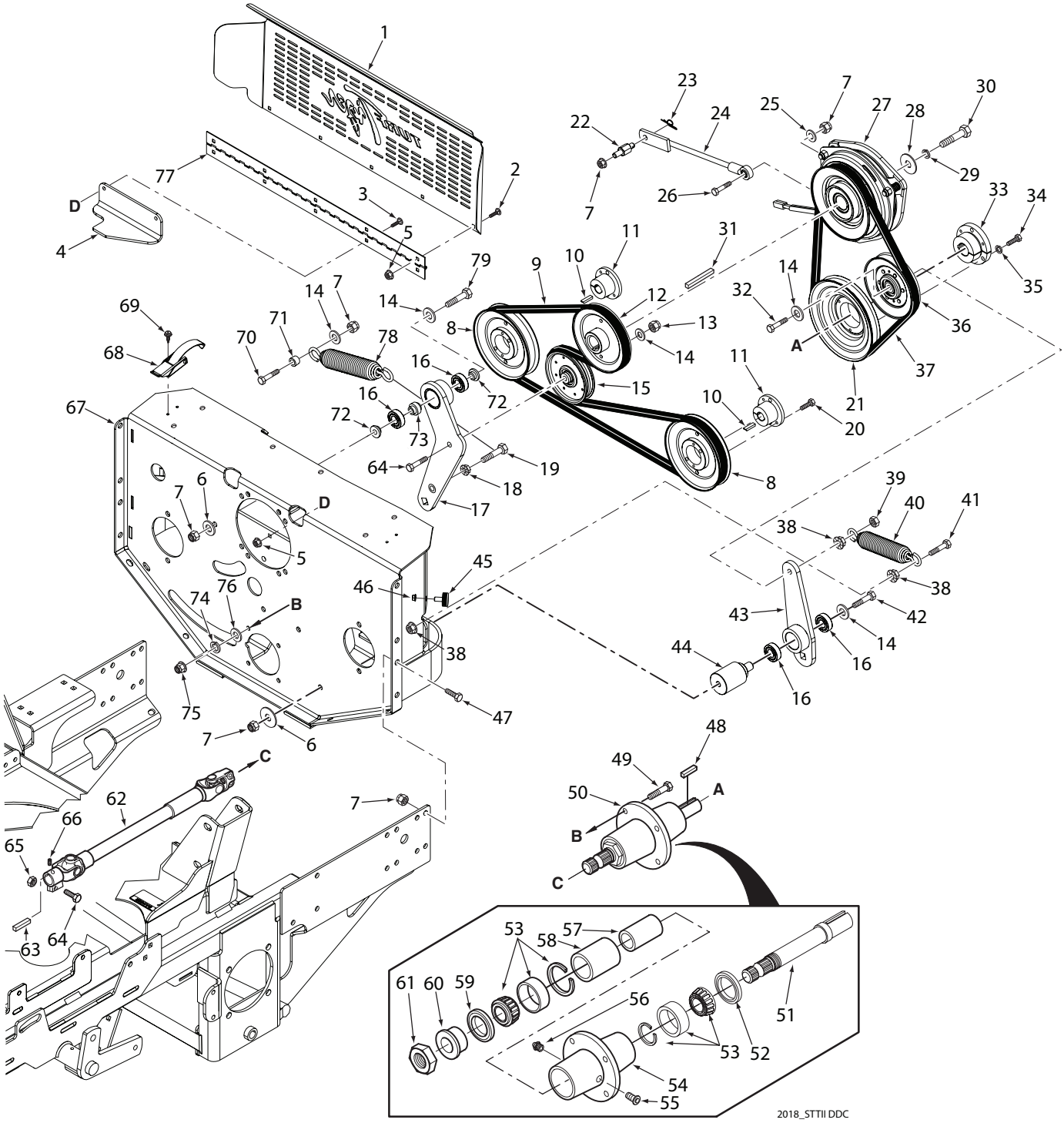

STTII DECK DRIVE COMPONENTS

Ref. No.	Part No.	Description
1	427106	Cover, Rear
2	04003-07	Bolt, Carriage 1/4-20 x 1/2”
3	04003-02	Bolt, Carriage 1/4-20 x 3/4”
4	425214	Bracket, Idler Stop
5	04019-02	Nut, Serrated Flange 1/4-20
6	04041-11	Flatwasher, 3/8-.406 x 1.50 x 7 Gauge
7	04021-09	Nut, Elastic Stop 3/8-16
8	482744	Pulley, 5.75 O.D. (Gas & LP Engines)
	482745	Pulley, 6.35 O.D. (Diesel Engine)
9	485909	Belt, STTII Pump Drive (Gas & LP Engines)
	485928	Belt, STTII Pump Drive (Diesel Engine)
10	04063-27	Key, 5mm x 5mm x 30mm
11	481884	Tapered Hub, 17mm Bore
12	483675	Pulley, 5.67 O.D. (Kawasaki & Kohler Only)
	485867	Pulley, 5.67 O.D. (31BV,35BV & 37BV-EFI Only)
	483829	Pulley, 5.67 O.D (Kubota Diesel Only)
13	04021-05	Nut, Center Lock 3/8-16
14	04043-04	Flatwasher, 3/8-.391 x .938 x .105 HD
15	483214	Pulley, Idler 4”
16	48224	Bearing
17	462989	Idler Arm Assy. (incl. #16 & #73)
18	04019-06	Nut, Serrated Flange 1/2-13
19	04001-185	Bolt, Hex Head 1/2-13 x 2” Grade 8
20	04001-172	Bolt, Hex Head 1/4-20 x 1” Grade 8
21	482949	Pulley, 6.70 O.D.
22	43651	Stud, Anti-Rotation
23	04069-01	Pin, Rue Cotter
24	482845	Rod Assembly
25	04040-12	Flatwasher, 3/8-.438 x 1.00 x .083
26	04001-32	Bolt, Hex Head 3/8-16 x 1-1/4”
27	461661	Clutch Assembly, GT3.5
	462011	Clutch Assembly, GT3.5 (Diesel Engine)
	461826	Clutch Assembly, GT5 (31BV,35BV & 37BV-EFI)
28	04041-28	Flatwasher, 7/16-.469 x 1.50 x .1793
29	04030-05	Lockwasher, 7/16”
30	04102-04	Bolt, Hex Head 7/16-20 x 2-1/2” (Kohler)
	04102-03	Bolt, Hex Head 7/16-20 x 2-1/4” (31BV,35BV & 37 BV-EFI)
	04102-03	Bolt, Hex Head 7/16-20 x 2-1/4” (Kubota)
	04103-02	Bolt, Hex Head M10-1.5 x 50 (Kawasaki)
31	04063-23	Key, 1/4 x 1/4 x 3-1/4”
32	04001-170	Bolt, Hex Head 3/8-16 x 2-1/2” Grade 8
33	481536	Tapered Hub, 1” Bore
34	04001-109	Bolt, Hex Head 1/4-20 x 1.375 Full Thread
35	04030-02	Lockwasher, 1/4”
36	48181	Pulley, Idler
37	482876	Belt, Deck Drive
38	04019-04	Nut, Serrated Flange 3/8-16
39	04021-05	Nut, Center Lock 3/8-16
40	484754	Spring, PTO (Gas & LP Engines)
	483430	Spring, PTO (Diesel Engine)
41	04001-136	Bolt, Hex Head 3/8-16 x 1-1/2” Grade 8
42	04001-171	Bolt, Hex Head 3/8-16 x 4-1/2”
43	461609	Idler Arm Assy., PTO Drive (incl. #16)
44	43632	Pivot, Idler - PTO
45	481284	Bumper, Rubber

Ref. No.	Part No.	Description
46	04019-03	Nut, Serrated Flange 5/16-18
47	04001-19	Bolt, Hex Head 3/8-16 x 1”
48	04063-06	Key, 1/4 x 1/4 x 1-1/2”
49	04001-176	Bolt, Hex Head 5/16-18 x 1-3/4” Grade 8
50	461697	Spindle Assy., PTO
51	43534	Shaft, Deck Drive
52	481024	Seal
53	481022	Bearing Assembly, Tapered
54	43644	Spindle Housing
55	48677	Relief Fitting
56	48114-04	Grease Fitting, 1/4-28
57	43296	Spacer, Inside
58	43312	Spacer, Outside
59	481025	Seal, 2” O.D. x 1.625 Bore
60	43297	Spindle Bushing, Bottom
61	481035	Nut, 1.06 - 18
62	482424	Driveshaft
63	04063-20	Key, 1/4 x 1/4 x 1”
64	04001-21	Bolt, Hex Head 3/8-16 x 1-3/4”
65	04021-05	Nut, Center Lock 3/8-16
66	04012-06	Set Screw, 3/8-16 x 1/2” Internal Hex
67	452864	Pump Mounting Plate Weldment (Gas & LP)
	452886	Pump Mounting Plate Weldment (Diesel)
68	481309	Latch, Hood
69	04011-11	Screw, #10-32 x .563 Shakeproof
70	04001-20	Bolt, Hex Head 3/8-16 x 1-1/2”
71	431051	Spacer, Spring Anchor
72	431049	Spacer, Controls
73	431050	Spacer, Bearing
74	04030-03	Lockwasher, 5/16”
75	04021-22	Nut, Elastic Stop 5/16-18 Grade 8
76	04040-15	Flatwasher, 5/16-.375 x .875 x .083
77	481531	Hinge, Belt Cover
78	484754	Spring Pump Drive
79	04001-22	Bolt, Hex Head 3/8-16 x 2-3/4”

STTII ENGINE AND ATTACHING PARTS - AIR COOLED (GASOLINE)

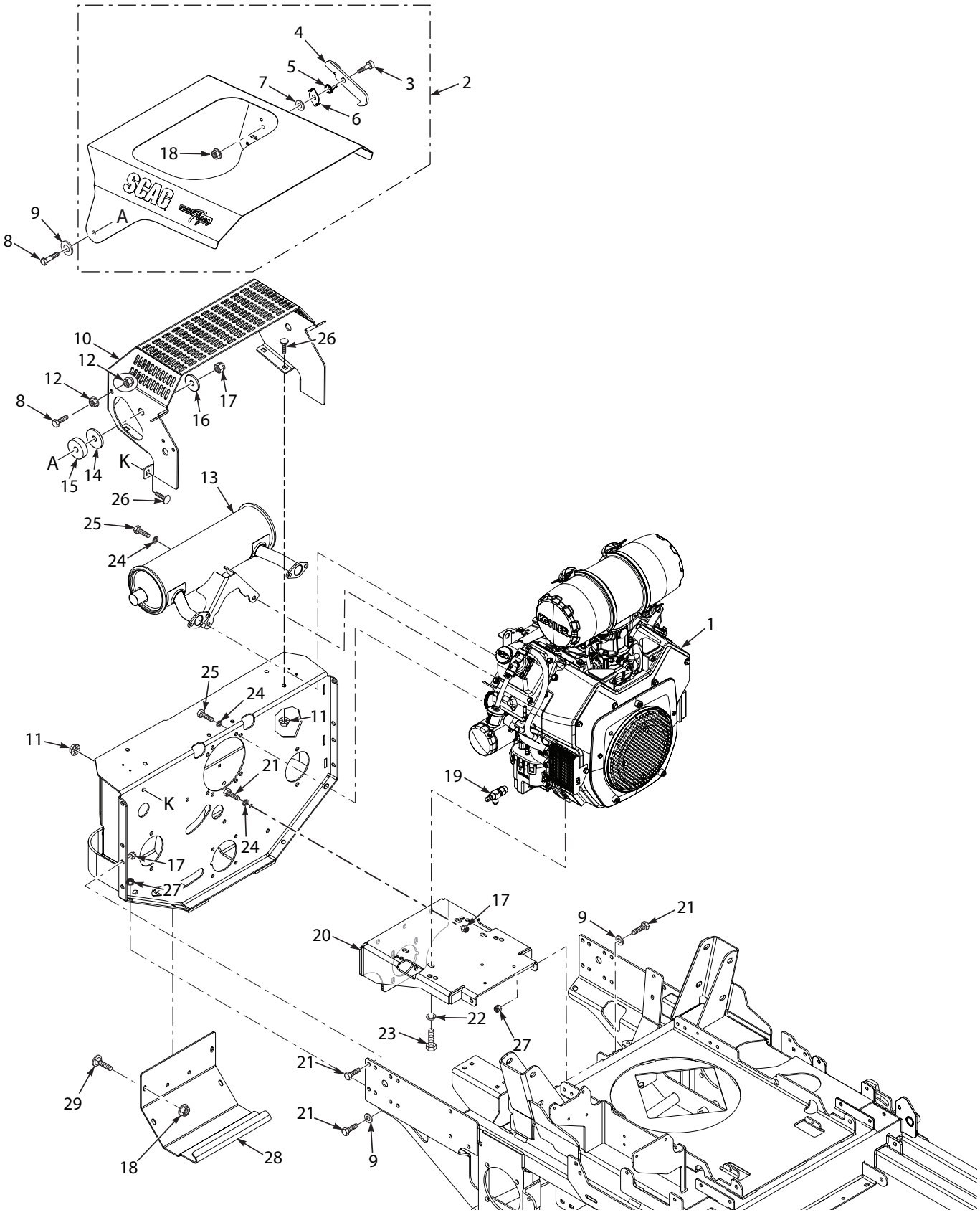

STTII ENGINE AND ATTACHING PARTS - AIR COOLED (GASOLINE)

Ref. No.	Part No.	Description
1	486522*	Engine, 31BV - Briggs & Stratton
	484238*	Engine, 35BV - Briggs & Stratton
	485894*	Engine, 37BV-EFI - Briggs & Stratton
2	462848	Hood Assy., STTII (31&35BV)
	462963	Hood Assy., STTII (37BV-EFI)
3	04009-07	Bolt, Shoulder 3/8-1/2
4	424633	Latch, Hood
5	483507	Spring, Hood
6	424634	Lock, Hood
7	04040-05	Flatwasher, 3/8-.406 x .812 x .065
8	04001-21	Bolt, Hex Head 3/8-16 x 1-3/4”
9	04041-07	Flatwasher, 3/8-.391 x .938 x .105
10	427561	Guard, Muffler
11	04117-01	Nut, Elastic Stop Flange, 5/16-18
12	04019-04	Nut, Serrated Flange 3/8-16
13	**	Muffler, 31BV - Briggs & Stratton
	**	Muffler, 35BV - Briggs & Stratton
	**	Muffler, 37BV-EFI - Briggs & Stratton
14	483471	Disc, Anti-Friction
15	43740	Spacer, Hood
16	04041-11	Flatwasher, 3/8-.406 x 1.50 x 7 Gauge
17	04021-09	Nut, Elastic Stop 3/8-16
18	04019-03	Nut, Serrated Flange 5/16-18
19	483017	Oil Drain, 31BV, 35BV & 37BV-EFI - Briggs & Stratton
20	452726	Plate Weldment, Engine Mounting
21	04001-19	Bolt, Hex Head 3/8-16 x 1”
22	04030-04	Lockwasher, 3/8
	04040-15	Flatwasher, 5/16-.375 x .875 x .083 (31BV,35BV & 37BV-EFI)
23	04001-17	Bolt, Hex Head 5/16-18 x 2-1/2” (x3) (31BV,35BV & 37BV-EFI)
	04001-53	Bolt, Hex Head 5/16-18 x 2-1/2” (31BV,35BV & 37BV-EFI)
	04021-22	Nut, Elastic Stop, 5/16-18 (x3) (31BV,35BV & 37BV-EFI)
	04019-03	Nut, Serrated Flange 5/16-18 (31BV,35BV & 37BV-EFI)
24	04030-04	Lockwasher, 3/8”
25	04001-19	Bolt, Hex Head 3/16-1”
26	04003-12	Bolt, Carriage 5/16-18 x 3/4”
27	04117-02	Nut, Elastic Stop Flange 3/8-16
28	427071	Cover, Rear
29	04003-12	Bolt, Carriage 5/16-18 x 3/4”

* Not available through Scag.

** Available through the individual engine manufacturer.

STTII ENGINE & ATTACHING PARTS - LIQUID COOLED (GASOLINE)

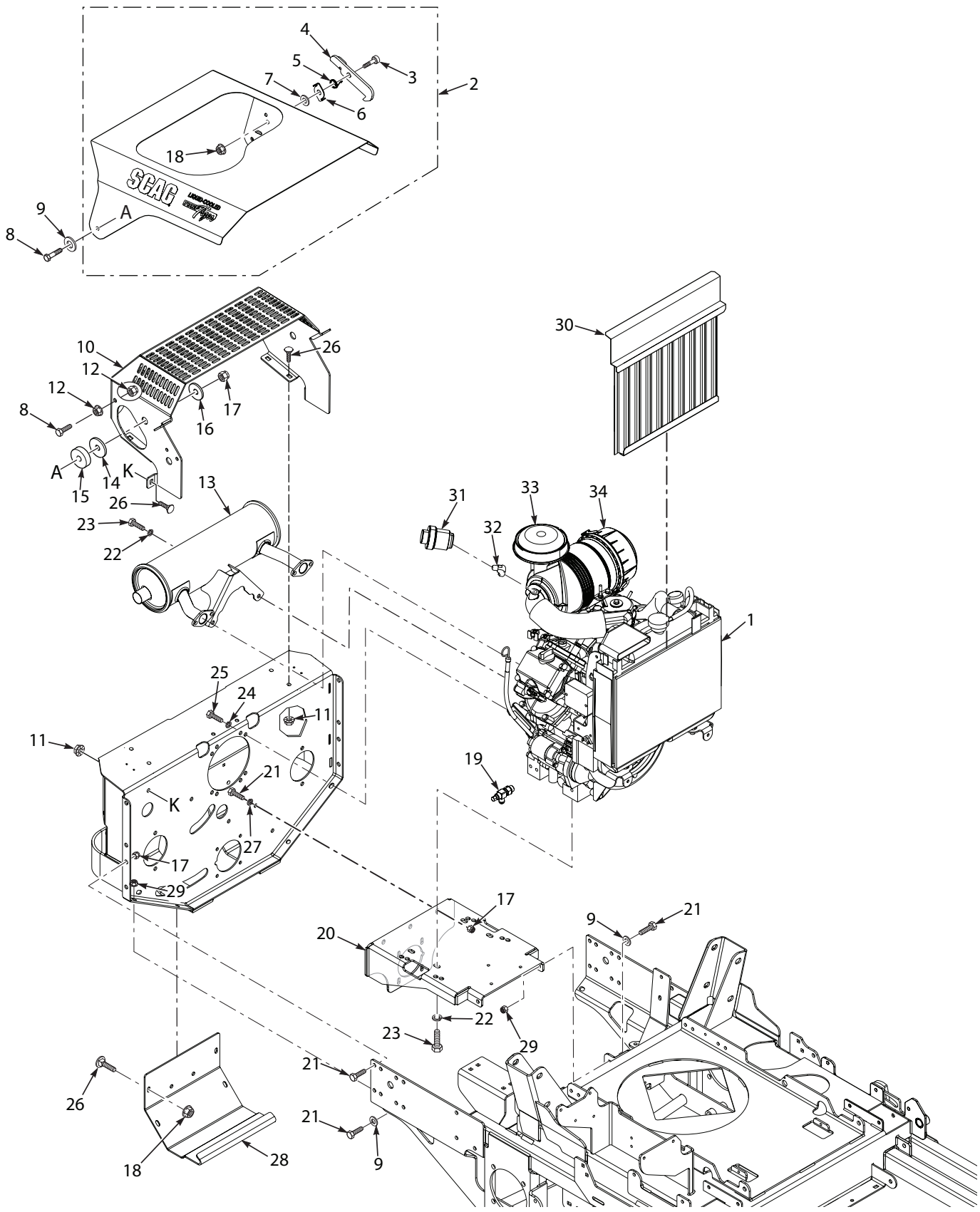

STTII ENGINE & ATTACHING PARTS - LIQUID COOLED (GASOLINE)

Ref. No.	Part No.	Description
1	485395*	Engine, FD851 - Kawasaki
2	462904	Hood Assy., STTII (FD851) - Fuel Injected
3	04009-07	Bolt, Shoulder 3/8 x 1/2
4	424633	Latch, Hood
5	483507	Spring, Hood Latch
6	424634	Lock, Hood Latch
7	04040-05	Flatwasher, 3/8-.406 x .812 x .065
8	04001-21	Bolt, Hex Head 3/8-16 x 1-3/4”
9	04041-07	Flatwasher, 3/8-.406 x .812 x .065
10	427561	Guard, Muffler
11	04117-01	Nut, Elastic Stop Flange, 5/16-18
12	04019-04	Nut, Serrated Flange 3/8-16
13	482699	Muffler, Kawasaki
14	483471	Disc, Anti-Friction
15	43740	Spacer, Hood
16	04041-11	Flatwasher, 3/8-.406 x 1.50 x 7 Gauge
17	04021-09	Nut, Elastic Stop 3/8-16
18	04019-03	Nut, Serrated Flange 5/16-18
19	482351	Oil Drain, Kawasaki
20	452726	Plate Weldment, Engine Mount
21	04001-19	Bolt, Hex Head 3/8-16 x 1”
22	04030-05	Lockwasher, 7/16
23	04002-18	Bolt, Hex Head M10-1.5 x 25 Full Thread
24	04030-03	Lockwasher, 5/16
25	04002-12	Bolt, Hex Head M8-1.25 x 20
26	04003-12	Bolt, Carriage 5/16-18 x 3/4”
27	04030-04	Lockwasher, 3/8
28	427071	Cover, Rear
29	04117-02	Nut, Elastic Stop Flange 3/8-16
30	452243	Screen Weldment, Radiator
31	485760	Gauge, Pressure Indicator
32	483517-01	Elbow, 90 Degree
33	485759	Rain Bonnet
34	482914	Air Cleaner Assy. KA/DFI (INCL. 31,32,33)

* Not available through Scag.

STTII ENGINE & ATTACHING PARTS - KOHLER 25CH-LP-EFI

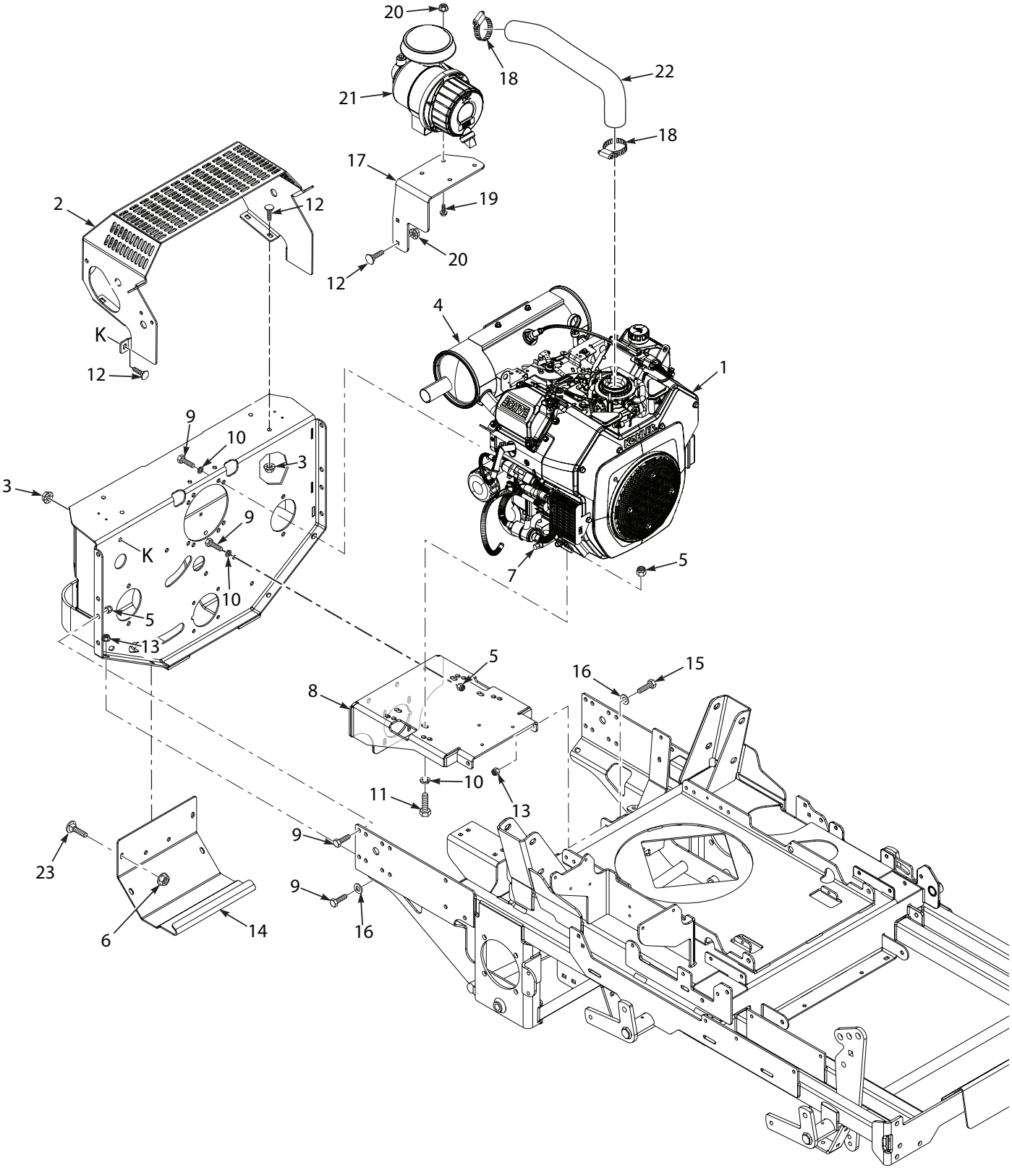

STTII ENGINE & ATTACHING PARTS - KOHLER 25CH-LP-EFI

Ref. No.	Part No.	Description
1	485380*	Engine, 25 LP-EFI - Kohler
2	427561	Guard, Muffler
3	04117-01	Nut, Flange Elastic Stop Nut, 5/16-18
4	**	Muffler, 25 LP-EFI - Kohler
5	04021-09	Nut, Elastic Stop 3/8-16
6	04019-03	Nut, Serr. Flng. 5/16-18
7	**	Oil Drain, Kohler 25 LP-EFI
8	452726	Plate Weldment, Engine Mounting
9	04001-19	Bolt, Hex Head 3/8-16 x 1”
10	04030-04	Lockwasher, 3/8”
11	04001-21	Bolt, Hex Head 3/8-16 x 1-3/4”
12	04003-12	Bolt, Carriage 5/16-18 x 3/4”
13	04117-02	Nut, Elastic Stop Flange 3/8-16
14	427071	Cover, Rear
15	04001-32	Bolt, Hex Head 3/8-16 x 1-1/4”
16	04041-07	Flatwasher, 3/8-.391 x .938 x .105
17	427909	Bracket, Air Cleaner Mount
18	48136-25	Clamp, 2-3/4” Max. Dia.
19	04017-17	Bolt, Hex Head Serr. Flng 5/16-18 x 1”
20	04019-03	Nut, Serr. Flng. 5/16-18
21	**	Air Filter Assembly
22	486043	Hose, Air Intake
23	04003-07	Bolt, Carriage 1/4-20 x 1/2”

* Not available through Scag.
** Available through the engine manufacturer.

STTII ENGINE & ATTACHING PARTS - KUBOTA DIESEL

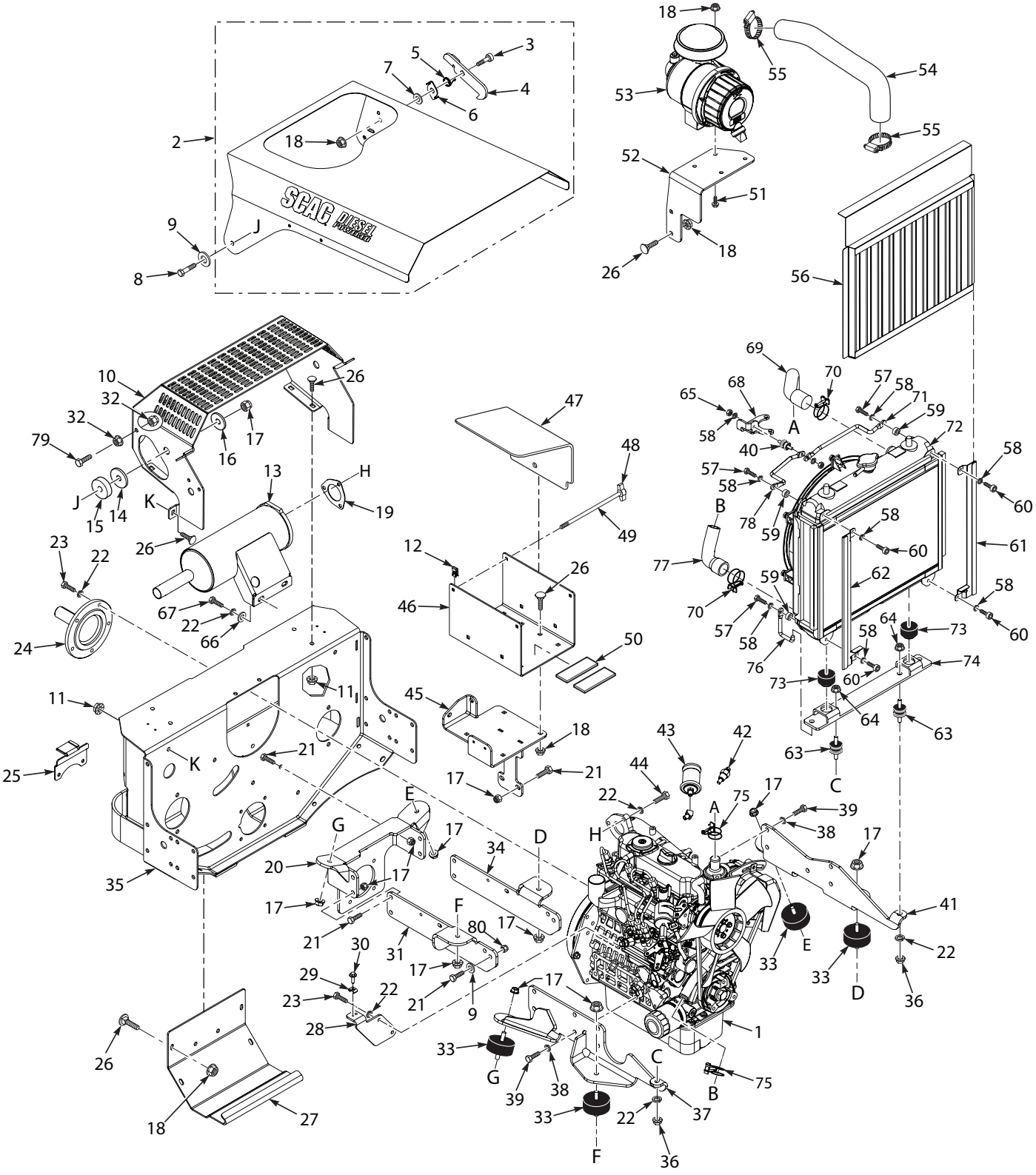

STTII ENGINE & ATTACHING PARTS - KUBOTA DIESEL

Ref. No.	Part No.	Description
1	485749*	Engine, D902 - Kubota
2	462917	Hood Assy., STTII (Kubota Diesel)
3	04009-07	Bolt, Shoulder 5/16-18 x 1/2”
4	424633	Latch, Hood
5	483507	Spring, Hood Latch
6	424634	Lock, Hood Latch
7	04040-05	Flatwasher, 3/8-.406 x .812 x .065
8	04001-21	Bolt, Hex Head, 3/8-16 x 1-3/4”
9	04041-07	Flatwasher, 3/8-.391 x .938 x .105
10	427561	Guard, Muffler
11	04117-01	Nut, Flange Elastic Stop Nut, 5/16-18
12	04110-01	U-Nut 1/4-20
13	483811	Muffler, Kubota
14	483471	Disc, Anti-Friction
15	43740	Spacer, Hood
16	04041-11	Flatwasher, 3/8 (.406 x 1.50 x 7 Ga.)
17	04021-09	Nut, Elastic Stop 3/8-16
18	04019-03	Nut, Serr. Flng. 5/16-18
19	483387	Gasket, Muffler
20	424452	Plate, Rear Engine Mount
21	04001-19	Bolt, Hex Hd. 3/8-16 x 1”
22	04030-03	Lockwasher, 5/16” Spring
23	04002-12	Bolt, Metric Hex Hd. M8-1.25 x 20mm
24	482334	Stub Shaft, (Kubota)
25	426054	Bracket, Belt Guide
26	04003-12	Bolt, Carriage 5/16-18 x 3/4”
27	427071	Cover, Rear
28	424485	Bracket, Control Mount
29	424580	Clamp
30	04011-06	Screw, Self Tapping
31	427137	Plate, Engine Mount RH
32	04019-04	Nut, Serr. Flng. 5/16-18
33	483351	ISO Mount
34	427136	Plate, Engine Mount LH
35	452886	Pump Mounting Plate Weldment
36	04025-02	Nut, Metric Hex M8-1.25mm
37	452792	Mounting Bracket Weldment RH
38	04030-05	Lockwasher, 7/16” Spring
39	04002-10	Bolt, Metric Hex Hd. M10-1.25 x 25mm
40	484069	ISO Mount, Upper Radiator
41	452791	Mounting Bracket Weldment LH
42	483360	Sender Unit, Water Temperature
43	481811	Sender Unit, Oil Pressure
44	04002-01	Bolt, Metric Hex Hd. M8-1.25 x 30mm
45	453112	Battery Bracket Weldment

Ref. No.	Part No.	Description
46	463320	Battery Box w/Decal
47	428257	Cover, Battery
	481780	Insulation, Battery Cover (Not Shown)
48	485698-01	Knob, 1/4” Wing
49	04001-221	Bolt, Hex Head 1/4-20 x 8”
50	48661	Rubber Pad
51	04017-17	Bolt, Hex Head Serr. Flng 5/16-18 x 1”
52	427140	Bracket, Air Cleaner Mount
53	485322	Air Filter Assembly (Enginaire p/n 67150)
54	484697	Hose, Air Intake
55	48136-25	Clamp, 2-3/4” Max. Dia.
56	462412	Debris Screen Assembly (With Upper Foam)
57	04002-20	Bolt, Metric Hex Hd. M6-1.0 x 30mm
58	04030-02	Lockwasher, 1/4” Spring
59	43714	Spacer, Radiator
60	04106-01	Capscrew, Metric M6-1.0 x 16mm
61	424623	Debris Screen Track RH
62	424624	Debris Screen Track LH
63	483928	ISO Mount, Lower Radiator
64	04111-04	Nut, Metric Serr. Flng. M8 x 1.25
65	04025-01	Nut, Metric Hex M6 x 1
66	04040-04	Flatwasher, SAE 5/16 (.344 x .688 x .065”)
67	04002-03	Bolt, Metric Hex Hd. M8-1.25 x 25mm
68	**	Mount, Hose - (Kubota p/n 1G930-72191)
69	**	Hose, Upper - (Kubota p/n 1G952-72851)
70	**	Clamp, Large - (Kubota p/n 09318-89030)
71	**	Brace, LH - (Kubota p/n1G960-72141)
72	**	Radiator Assy - (Kubota p/n 1G952-72001) Includes Items #40, #63 and #68 thru #78
73	**	Cushion, Radiator - (Kubota p/n 1G952-72181)
74	**	Brkt, Rad Mount - (Kubota p/n 1G952-72151)
75	**	Clamp, Small - (Kubota p/n 09318-89039)
76	**	Mount, Lwr Rad - (Kubota p/n 1G952-30821)
77	**	Hose, Lower - (Kubota p/n 1G952-72941)
78	**	Brace, RH - (Kubota p/n 1G960-72131)
79	04001-21	Bolt, Hex Head, 3/8-16 x 1-3/4”
80	04117-02	Nut, Elastic Stop Flange, 3/8-16

* Not available through Scag.

** Available through the engine manufacturer.

SCAG

STTII BRAKE COMPONENTS

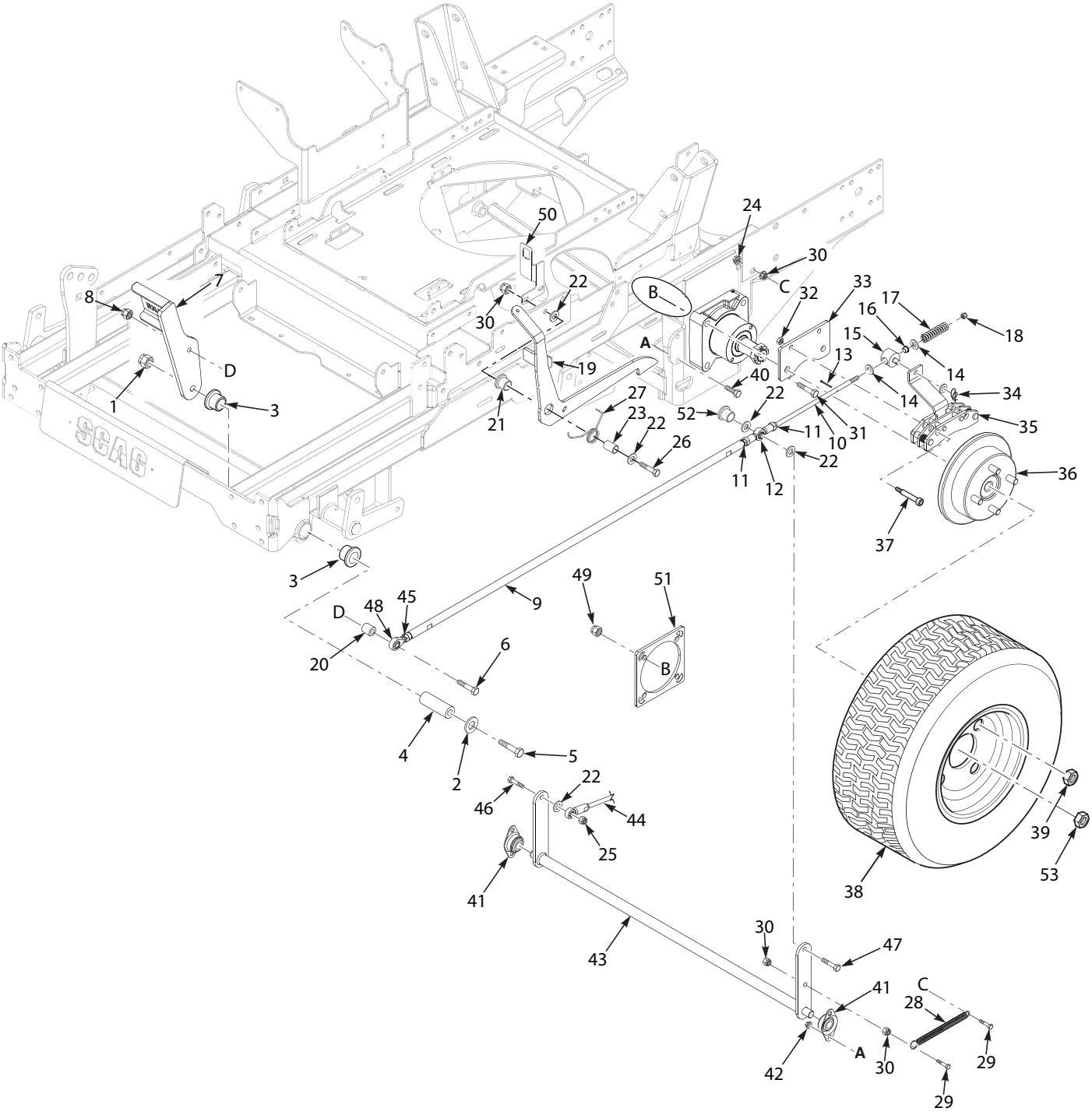

STTII BRAKE COMPONENTS

Ref. No.	Part No.	Description
1	04021-07	Nut, Elastic Stop 1/2-13
2	04040-13	Flatwasher, 1/2-.562 x 1.375 x .109
3	483453-03	Bearing
4	43872	Sleeve, Brake Pivot
5	04001-194	Bolt, Hex Head 1/2-13 x 4-1/4”
6	04001-22	Bolt, Hex Head 3/8-16 x 2-3/4”
7	453055	Foot Pedal, Brake
8	04021-09	Nut, Elastic Stop 3/8-16
9	486523	Link, Brake
10	486524	Linkage Assy., LH Brake (incl. #9, 11 - 18,45,48)
11	04020-25	Nut, Jam 3/8-24 UNF
12	486491	Rod End w/Trunion
13	04061-02	Cotter Pin, 3/32 x .75
14	04040-05	Flatwasher, 3/8-.406 x .812 x .065
15	462452	Swivel Assy., Brake (incl. #16)
16	483453-23	Bearing
17	484535	Spring, Brake
18	04021-18	Nut, Elastic Stop 3/8-24 Grade 8
19	463174	Brake Handle w/Grip (includes #21)
	481548	Grip
20	43572	Spacer
21	483453-14	Bearing
22	04041-07	Flatwasher, 3/8-.391 x .938 x .105
23	431105	Pivot, Brake Lever
24	04132-02	Threaded Insert, 3/8-16
25	04021-05	Nut, Center Lock 3/8-16
26	04001-31	Bolt, Hex Head 3/8-16 x 2-1/2”
27	486485	Spring, Torsion, Brake Handle
28	485831	Spring, Brake Return
29	04001-136	Bolt, Hex Head 3/8-16 x 1-1/2” Grade 8
30	04019-04	Nut, Serrated Flange 3/8-16

Ref. No.	Part No.	Description
31	04001-190	Bolt, Hex Head 1/2-13 x 2-3/4”
32	04021-05	Nut, Serrated Flange 3/8-16
33	426983	Mounting Bracket, Brakes
34	04069-01	Pin, Rue Cotter - 3/8
35	485595	Brake Caliper
36	462808	Wheel Hub w/Disc
37	04009-10	Bolt, Shoulder 1/2”, 3/8-16 x 2-3/4”
38	485607	Wheel Assy., 26 x 9.5-12 (52V)
	481659	Rim w/ Valve Stem (52V)
	485608	Tire, 26 x 9.5-12 (52V)
	486159	Wheel Assy., 26 x 12-12 (61V & 72V)
	481851	Rim w/Valve Stem (61V & 72V)
	486162	Tire, 26 x 12-12 (61V & 72V)
39	04028-02	Wheel Nut, 1/2-20
40	04001-08	Bolt, Hex Head 5/16-18 x 3/4”
41	48796	Bearing, Self Aligning - 5/8 I.D.
42	04021-10	Nut, Elastic Stop 5/16-18
43	453094	Bellcrank Weldment, Brake Actuator
44	462844	Linkage Assy., RH Brake (incl. #13 - #18)
45	04020-26	Nut, 3/8-24 UNF LH Jam
46	04001-32	Bolt, Hex Head 3/8-16 x 1-1/4”
47	04102-14	Bolt, Hex Head w/ Patch 3/8-16 x 1-3/4”
48	482586	Rod End, Male - RH, 3/8-24 Thread
49	04021-19	Nut, Lock, 1/2-13
50	428092	Bracket, Brake Switch
51	423279	Plate, Motor Backing
52	431094	Bushing, Brake
53	48680	Nut, Castle 1”- 20 UNEF

STTII STEERING COMPONENTS

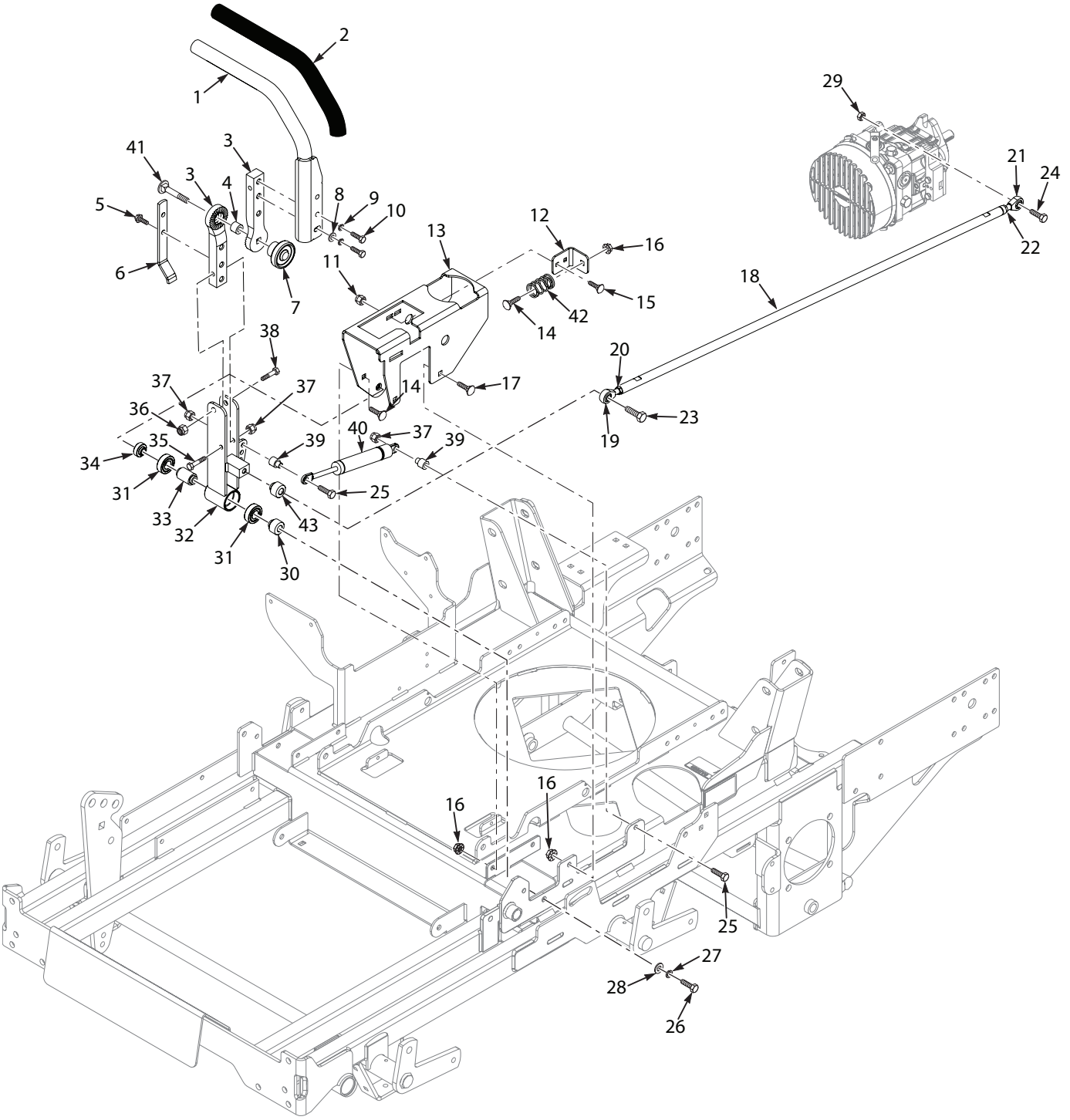

STTII STEERING COMPONENTS

Ref. No.	Part No.	Description
1	462804	Handle Bar w/Grip - LH (INCL #2)
	462805	Handle Bar w/Grip - RH (INCL #2)
2	484376	Grip, Control Lever
3	461938	Pivot, Control Lever (INCL #4,5,6,7,41)
4	483250	Spacer, Rubber
5	04017-16	Bolt, Hex Head Serrated Flange 5/16-18 x 3/4”
6	423491	Actuator, Switch
7	483269	Knob, Control Handle
8	04040-15	Flatwasher, 5/16-.375 x .875 x .083
9	04030-03	Lockwasher, 5/16
10	04001-09	Bolt, Hex Head 5/16-18 x 1”
11	04117-03	Nut, Flange Elastic Stop 1/4-20
12	427108	Mounting Bracket, Spring Return
13	463221	Control Plate w/Decals LH
	463222	Control Plate w/Decals RH
14	04003-12	Bolt, Carriage 5/16-18 x 3/4”
15	04003-02	Bolt, Carriage 1/4-20 3/4”
16	04019-03	Nut, Serrated Flange 5/16-18
17	04013-03	Capscrew, Flange 5/16-18 x 3/4”
18	486479	Linkage Assy., Pump Control (incl. #19 - #22)
19	482585	Rod End, Male - LH
20	04026-26	Nut, 3/8-24 UNF LH Jam
21	482586	Rod End, Male - RH
22	04020-25	Nut, 3/8-24 UNF Jam
23	04001-21	Bolt, Hex Head 3/8-16 x 1-3/4”
24	04001-32	Bolt, Hex Head 3/8-16 x 1-1/4”
25	04001-11	Bolt, Hex Head 5/16-18 x 1-1/2”
26	04001-152	Bolt, Hex Head 3/8-16 x 4-1/4”
27	04030-04	Lockwasher, 3/8”
28	04041-07	Flatwasher, 3/8-.391 x .938 x .105
29	04021-05	Nut, Center Lock 3/8-16
30	43607	Spacer, Controls
31	48224	Bearing

Ref. No.	Part No.	Description
32	452718	Control Lever Weldment, RH
	452717	Control Lever Weldment, LH
33	43600	Spacer, Bearing
34	431024	Spacer, Controls
35	04001-17	Bolt, Hex Head 5/16/-18 x 2”
36	04021-09	Nut, Elastic Stop 3/8-16
37	04021-10	Nut, Elastic Stop 5/16-18
38	04001-45	Bolt, Hex Head 3/8-16 x 2”
39	43602	Spacer, Dampener
40	484151	Dampener
41	04003-05	Bolt, Carriage 3/8-16 x 1-1/2”
42	485970	Return Spring, Control Arm
43	43123	Spacer, Cam Pivot

STTII HYDRAULIC SYSTEM

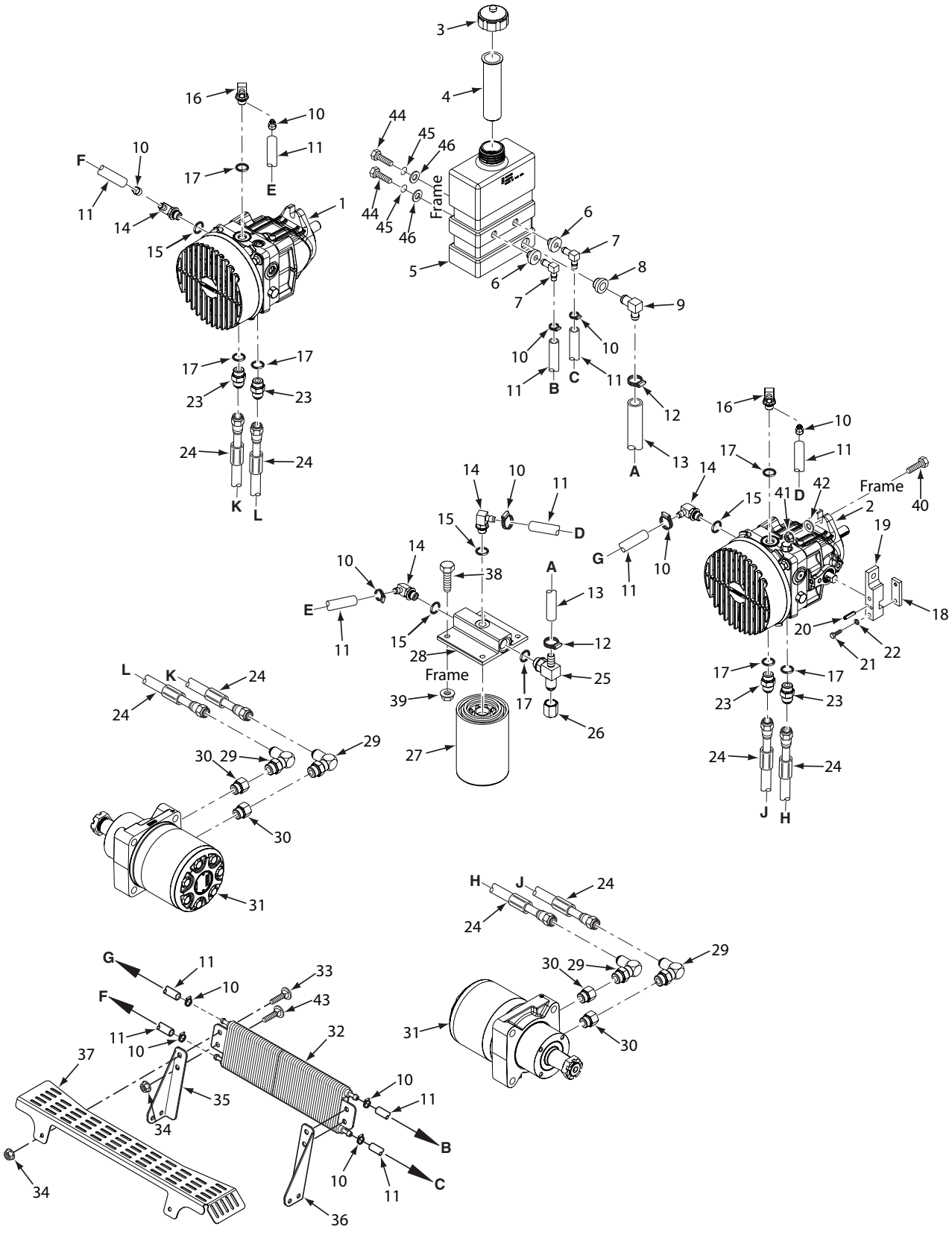

STTII HYDRAULIC SYSTEM

Ref. No.	Part No.	Description
1	483100	Pump, RH w/Fan
	462954	Pump, RH w/Fan (25LP Only)
2	483101	Pump, LH, w/Fan
3	481164	Cap, Hydraulic Tank
4	481507	Insert, Filler Neck
5	462845	Hydraulic Tank Assy., STTII (incl. #4, #6 - #9)
6	482571	Bushing, .56 Dia. Viton
7	482572	Fitting, 90 Degree - .38 Hose
8	482573	Bushing, .78 Dia Viton
9	482574	Fitting, 90 Degree - .50 Hose
10	48136-13	Clamp, Hose
11	48811	Hose, 3/8 Pushlock (order by inch)
12	48136-05	Clamp, Hose
13	48351	Hose, 1/2 Pushlock (order by inch)
14	482266-01	Elbow, 90 Degree - 9/16 O-Ring (incl. #15)
15	48603-06	O-Ring, 9/16-18 Thread
16	482266-02	Elbow, 90 Degree - 3/4 O-Ring (incl. #17)
17	48603-02	O-Ring, 3/4-16 Thread
18	422694	Plate, Pump Control Clamp
19	485969	Block, RH Pump Control
	485968	Block, LH Pump Control
20	04060-09	Pin, 7/32 x 1”
21	04001-04	Bolt, Hex Head 1/4-20 x 1-1/2”

Ref. No.	Part No.	Description
22	04030-02	Lockwasher, 1/4
23	48572-06	Fitting, Union 3/4-16 JIC X O-Ring (incl. #17)
24	484458	Hose Assembly
	485767	Hose Assembly (Diesel Only)
25	482477	Tee Fitting, 3/4 - O-Ring (incl. #17)
26	48571-02	Cap, JIC
27	48758	Filter, Spin-On
28	482417	Filter Head Assembly
29	48350-05	Elbow, 90 Degree - 5/8 Tube
30	48938-02	O-Ring Bushing, 5/8 Tube
31	484108	Wheel Motor, Parker TG - 18ci.
32	482505	Cooler, Transmission
33	04003-02	Bolt, Carriage 1/4-20 x 3/4
34	04019-02	Nut, Serrated Flange 1/4-20
35	428197	Mounting Bracket, Cooler - RH
	428209	Mounting Bracket, Cooler - RH (Diesel)
36	428196	Mounting Bracket, Cooler - LH
	428210	Mounting Bracket, Cooler - LH (Diesel)
37	*428252	Screen Guard, Kohler EFI (LP)
	*428199	Screen Guard, Briggs & Stratton 31&35BV
	*428200	Screen Guard, Briggs & Stratton 37BV-EFI
38	04001-09	Bolt, Hex Head, 5/16-18 x 1”
39	04019-03	Nut, Serrated Flange, 5/16-18
40	04001-20	Bolt, Hex Head, 3/8-16 x 1-1/2”
41	04021-09	Nut, Lock, 3/8-16
42	04043-04	Flatwasher, 3/8
43	04003-07	Bolt, Carriage, 1/4-20 x 1/2”
44	04001-08	Bolt, Hex Head 5/16-18 x 3/4”
45	04030-03	Lockwasher, 5/16
46	04040-15	Flatwasher, 5/16, .375 x .875 x .083

* Air Cooled Models Only.

STTII FUEL SYSTEM - GASOLINE ENGINES

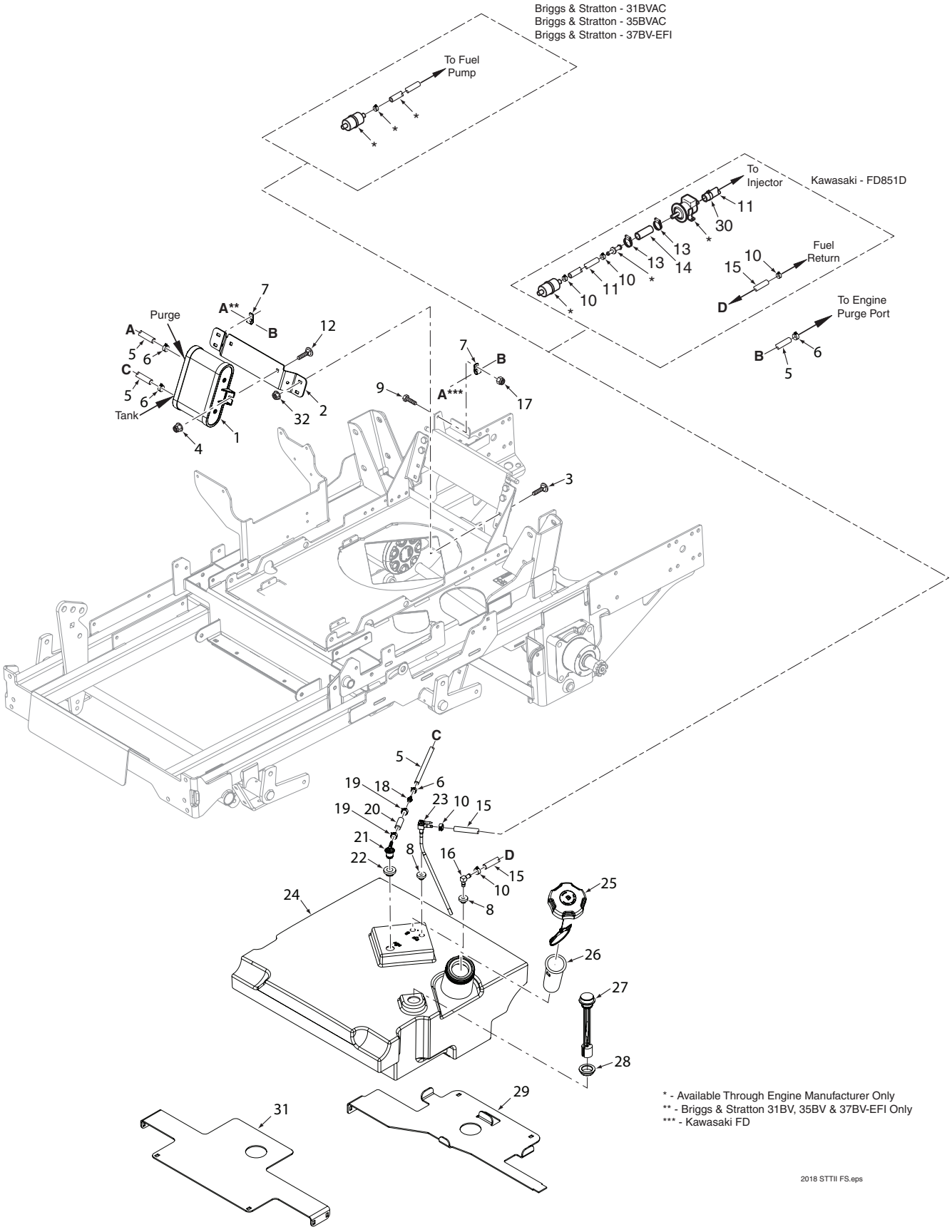

STTII FUEL SYSTEM - GASOLINE ENGINES

Ref. No.	Part No.	Description
1	485621	Canister, 1.0 Liter
2	427051	Bracket, Carbon Canister
	428203	Bracket, Carbon Canister (31DFI)
3	04003-02	Bolt, Carriage 1/4-20 x 3/4”
4	04117-01	Nut, Flange Elastic Stop 5/16-18
5	484345	Hose, 3/16 (order by inch)
6	48059-05	Clamp, Vapor Recovery Hose 3/16
7	48030-22	Clamp, Cable - .375 Dia.
8	482571	Bushing, .56 Dia. Viton
9	04001-14	Bolt, Hex Head 1/4-20 x 1”
10	48059-01	Clamp, Fuel Return
11	483620	Fuel Hose, 5/16 I.D. Non-Perm (order by inch)
12	04003-12	Bolt, Carriage 5/16-18 x 3/4”
13	48136-05	Clamp, .87 Max. Dia.
14	483622	Fuel Hose, 1/2 I.D. Non-Perm (order by inch)
15	483617	Fuel Hose, 1/4 I.D. Non-Perm (order by inch)
16	485683	Return Fitting
17	04117-03	Nut, Elastic Stop 1/4-20
18	484343-01	Mender, 1/4 x 3/16 w/.02 Hole
19	48059-02	Clamp, Fuel Hose 7/32 I.D.
20	484347	Hose, Vapor Recovery 1/4 (order by inch)
21	484333	Remote Vent
22	484285	Grommet, Viton
23	485701	Valve, Fuel Shutoff
24	462833	Fuel Tank Assy. - Kawasaki DFI
	463148	Fuel Tank Assy.
25	484286	Fuel Cap, Tethered
	*484297	Fuel Cap, Tethered (CA)
26	484279-02	Tube, Fuel Tank Insert - 8”
27	485687	Fuel Gauge Assy., 8” (incl. #28)
28	484242	Seal, Fuel Gauge
29	428024	Rear Support, Fuel Tank
30	48136-13	Clamp, .69 Dia.
31	428023	Front Support, Fuel Tank
32	04019-02	Nut, Serrated Flange 1/4-20
**	462840	Hose Assy, Vapor Recovery (INCL 5,6,18,19,20)
**	485742	Pad, Fuel Tank

* California Models Only.
** Item Not Shown

STTII FUEL SYSTEM - KOHLER 25CH-LP-EFI

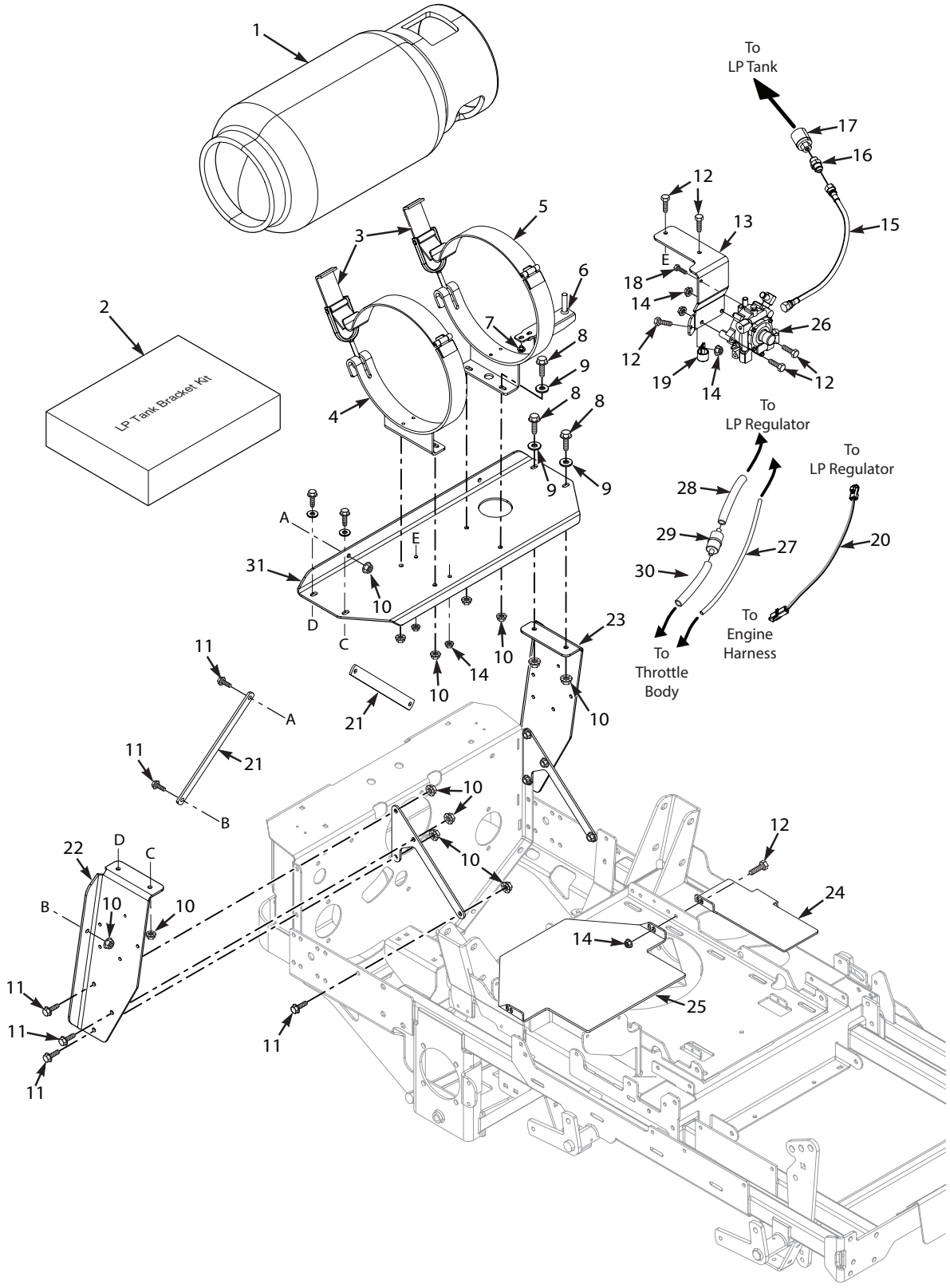

STTII FUEL SYSTEM - KOHLER 25CH-LP-EFI

Ref. No.	Part No.	Description
1	485376	LP Tank - Vapor (INCL 17)
2	483903	Mounting Bracket Kit (INCL # 3, 4, 5, 6, 7)
3	483911	Handle, LP Tank Mounting Bracket
4	483910	Mounting Bracket, LP Tank Rear
5	483909	Mounting Bracket, LP Tank Front
6	483912	Bracket, LP Tank Locator
7	04001-07	Bolt, Hex Head 5-16-18 x 1/2" Locking
	04031-09	Lockwasher, 5/16 Internal Tooth
	04040-04	Flatwasher, 5/16 - .344 x .688 x .065
8	04001-19	Bolt, Hex Head 3/8-16 x 1"
9	04041-07	Flatwasher, 3/8-.391 x .938 x .105
10	04019-04	Nut, Serrated Flange 3/8-16
11	04001-18	Bolt, Head Head 3/8-16 x 3/4"
12	04001-08	Bolt, Hex Head 5/16-18 x 3/4"
13	427688	Mounting Bracket, Regulator
14	04019-03	Nut, Serrated Flange 5/16-18
15	486165	LP Fuel Line, 17"
16	483889-01	Adapter Fitting, 9/16-18 SAE x 1/4" Pipe
17	485377	LP Quick Coupler
18	04001-01	Bolt, Hex Head 1/4-20 x 3/4"
19	48030-10	Clamp, Cable
20	486164	Adapter, Wire Harness
21	422386	Brace, Engine Mounting
22	426741	Mounting Bracket, Tank Support - RH
23	426740	Mounting Bracket, Tank Support - LH
24	428221	Cover, Fuel Fill Hole
25	428222	Cover, Fuel Tank Hole
26	**	LP Regulator
27	**	Hose
28	**	Hose
29	**	Fuel Filter
30	**	Hose
31	427753	Support, LP Tank

** Available through the engine manufactuer.

STTII FUEL SYSTEM - KUBOTA DIESEL

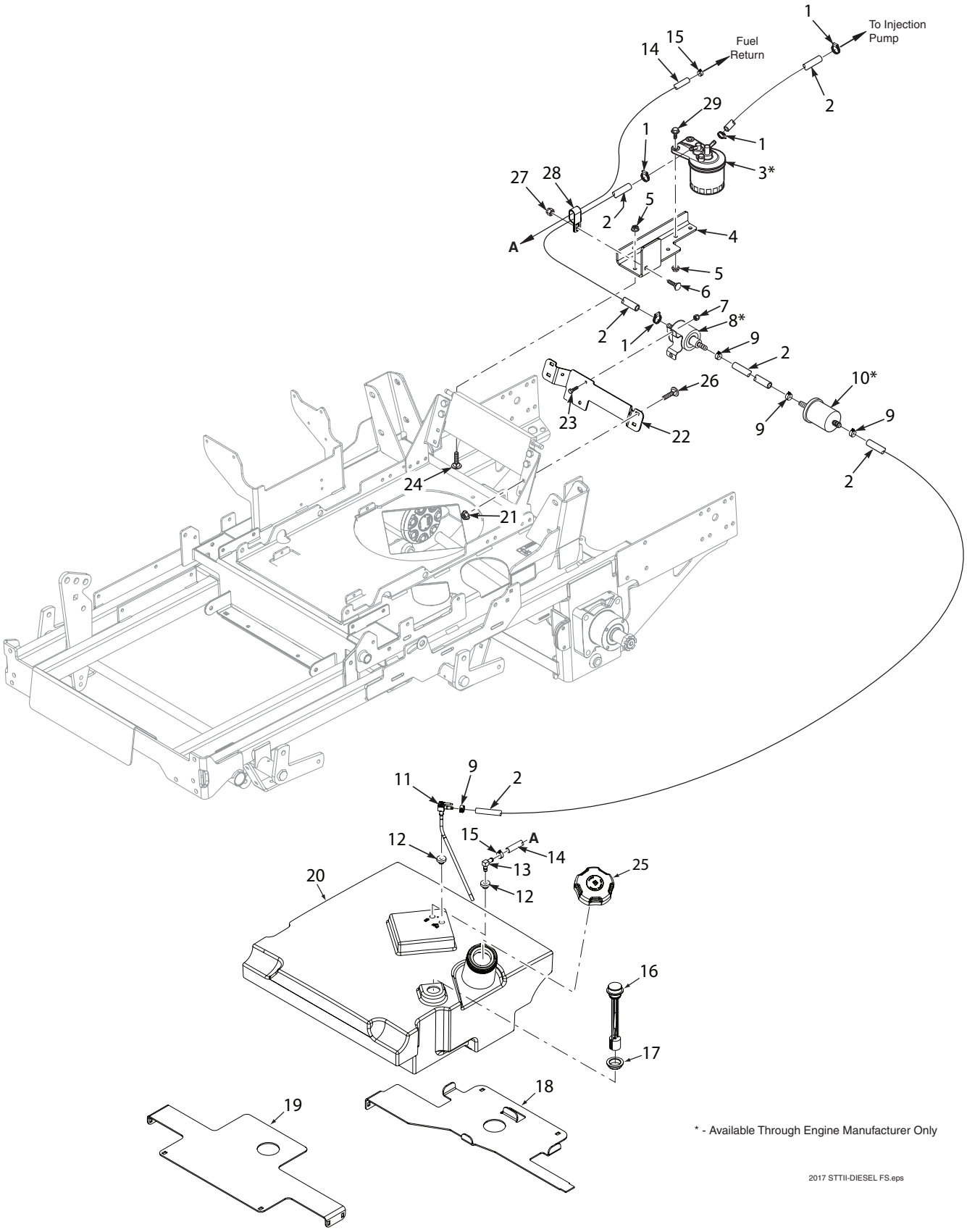

* - Available Through Engine Manufacturer Only

2017 STTII-DIESEL FS.eps

STTII FUEL SYSTEM - KUBOTA DIESEL

Ref. No.	Part No.	Description
1	48136-13	Hose Clamp, 0.69” Dia.
2	483620	** Fuel Hose, 5/16” ID. Non-Perm.
3	*	Fuel Filter, Kubota
4	427164	Bracket, Fuel Filter Mounting
5	04019-03	Nut, Serr. Flng. 5/16-18
6	04003-12	Bolt, Carriage 5/16-18 x 3/4”
7	04021-08	Nut, Hex Elastic Stop 1/4-20
8	*	Fuel Pump, Kubota
9	48059-04	Clamp, Fuel Supply Hose
10	*	Fuel Pre-Filter, Kubota
11	485701	Valve, Shutoff Assy
12	482571	Bushing, 0.56” Dia. Viton
13	485626	Fitting, Return
14	481179	** Fuel Return Hose, 3/16”
15	48059-03	Clamp, Fuel Return Hose
16	485687	Fuel Gauge Assy., 8” (incl. #17)
17	484242	Seal, Fuel Gauge
18	428024	Rear Support, Fuel Tank
19	428023	Front Support, Fuel Tank
20	463149	Fuel Tank Assembly (Incl. #11, 12, 15, 16)
21	04019-02	Nut, Serr. Flng. 1/4-20
22	428225	Mounting Bracket, Fuel Pump
23	04003-02	Bolt, Carriage, 1/4-20 x 3/4”
24	04003-04	Bolt, Carriage 5/16-18 x 1”
25	484294	Fuel Cap
26	04003-02	Bolt, Carriage 1/4-20 x 3/4”
27	04117-01	Nut, Flange Elastic Stop Nut, 5/16-18
28	48030-11	Clamp, Hose
29	04001-09	Bolt, Hex Head, 5/16-18 x 1”
***	485742	Pad, Fuel Tank

* Available Through Engine Manufacturer Only.
** Order by the inch.
*** Item Not Shown

BDP-16A HYDRAULIC PUMP ASSEMBLY with COOLING FAN

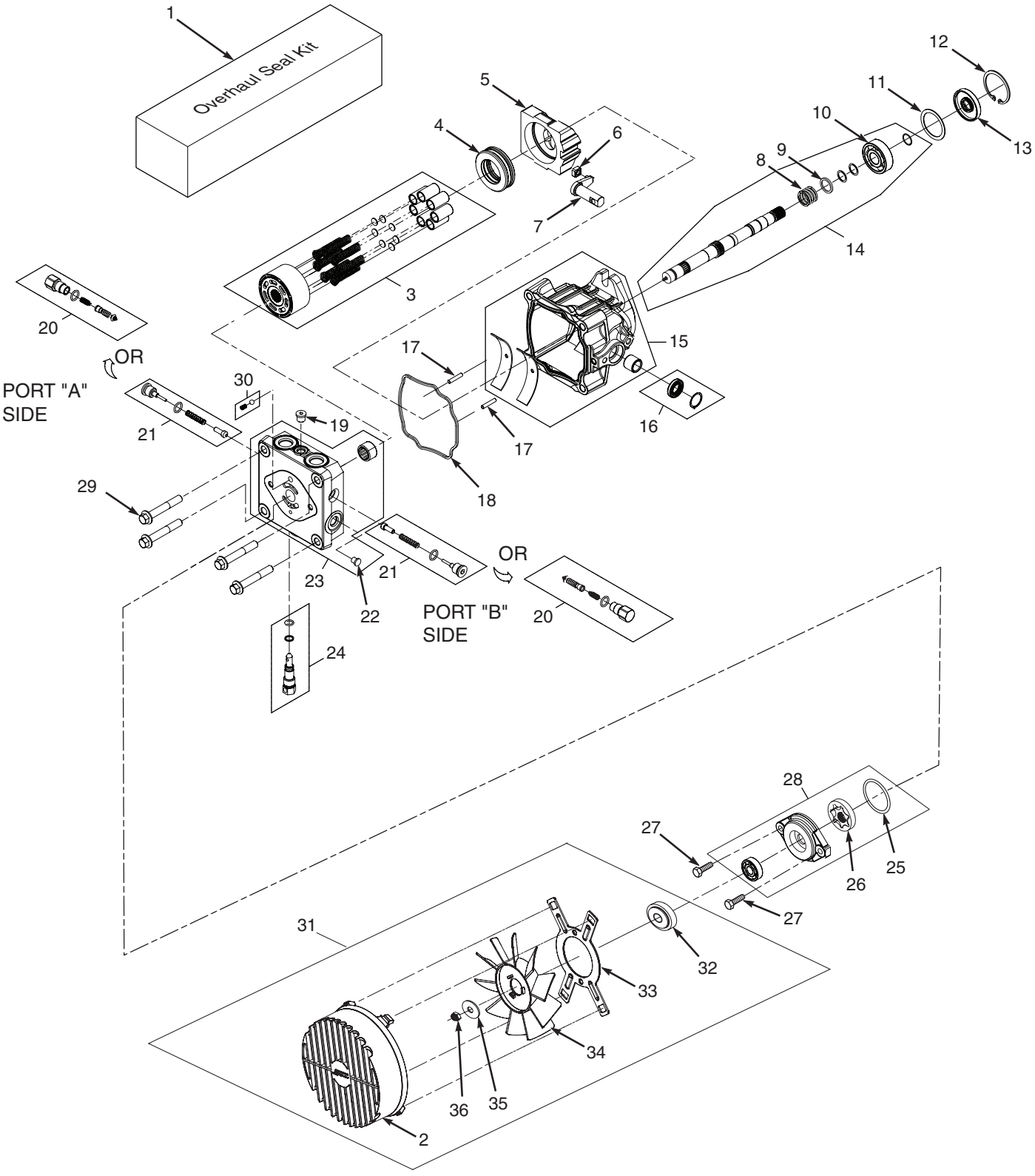

BDP-16A HYDRAULIC PUMP ASSEMBLY with COOLING FAN

Ref. No.	Part No.	Description
1	HG70740	Overhaul Seal Kit
2	HG52059	Fan Cover
	485879	Fan Cover w/ Notch (25LP Right Side Pump Only)
3	HG72158	Cylinder Block Kit - 16cc
4	HG51462	Thrust Ball Bearing Assembly
5	HG51436	Variable Swashplate
6	HG2000015	Slot Guide
7	HG2000014	Trunnion Arm
8	HG2000025	Block Spring
9	HG2000024	Block Thrust Washer
10	HG2000032	Shaft Ball Bearing
11	HG2000023	Spacer
12	HG2000038	Retaining Ring
13	HG51092	Seal
14	HG70578	Kit, Pump Shaft (keyed thru taper)
15	HG70738	Housing Kit
16	HG70739	Trunnion Seal Kit
17	HG50641	Pin
18	HG51437	O-Ring
19	HG9005110-7500	Straight Thread Plug
20	HG70743	Shock Valve Kit (.031 Orifice)
21	HG70742	Shock Valve Kit (.024 Orifice)
22	HG9005200-7500	Straight Thread Plug
23	HG70736	End Cap Kit
24	HG2513030	Bypass Valve Kit
25	HG9004100-1430	O-Ring
26	HG50406	Gerotor Assembly (.19 cu.in./rev.)
27	HG50173	Socket Head Cap Screw (M8 x 1.25-25mm)
28	HG70924	Charge Pump Kit (.19 STD. Splined)
29	HG51457	Hex Screw, Flanged Head (M10 x 1.50-65mm)
30	HG70402	Charge Relief Kit
31	HG71287	Fan Kit (incl. items 32, 34, 35, 36)
32	HG51348	Hub
33	HG52016	Bracket, Shroud
34	HG52014	Fan
35	HG52256	Washer
36	HG44809	Nut

STTII ELECTRICAL SYSTEM - GASOLINE & LP ENGINES

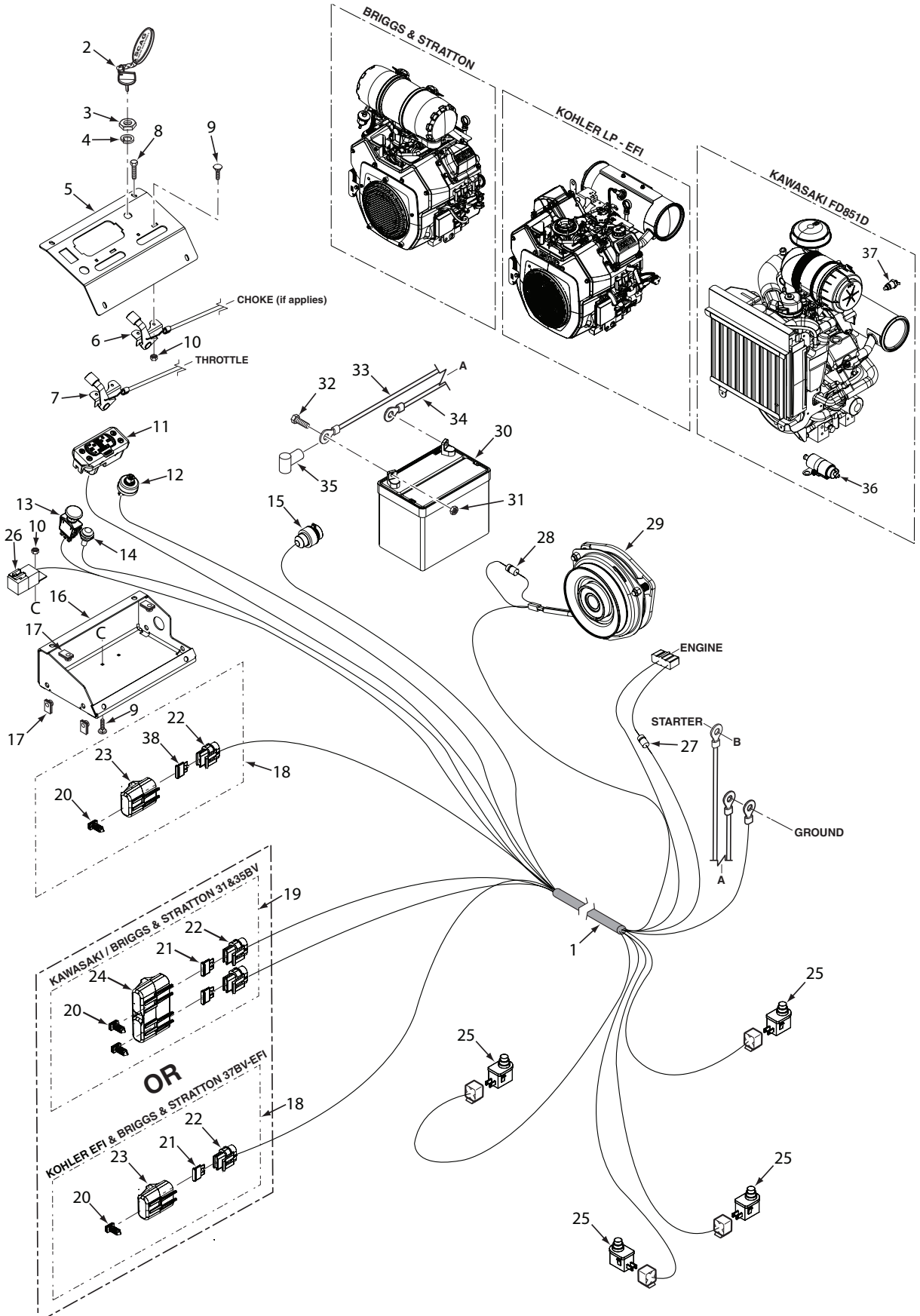

STTII ELECTRICAL SYSTEM - GASOLINE & LP ENGINES

Ref. No.	Part No.	Description
1	486511	Wire Harness, STTII-BV (Briggs & Stratton)
	486512	Wire Harness, STTII-BV-EFI (Briggs & Stratton)
	486515	Wire Harness, STTII-EFI (Kohler EFI-LP)
	486513	Wire Harness, STTII-FD851D DFI (Kawasaki)
2	462069	Key Assy., w/Fob
3	48017-04	Nut, Hex 5/8-32
4	48017-03	Lockwasher, 5/8 Internal
5	462930	Instrument Panel w/Decal
6	481544	Choke Cable (31BV & 35BV)
7	484289	Control Cable, Throttle
	481363	Control Cable, Throttle (31BV, 35BV & 37BV)
8	04013-04	Capscrew, 1/4-20 x 3/4”
9	04003-43	Bolt, Carriage 1/4-20 x 1/2”
10	04021-26	Lock Nut, #10-24
11	484721	Cluster Gauge
12	48798	Key Switch
13	485833	Switch, PTO
14	481182	Indicator Light Assy. (Kohler EFI-LP & Kawasaki DFI)
15	485568	Power Plug, 12V
16	427541	Base, Instrument Panel
17	04110-01	U-Nut, 1/4-20
18	485739	Single Fuse Assy., Excluding Fuse (incl. #20, 22, 23)
19	483642	Double Fuse Assy. (incl. #20, 21, 22, 24)
20	482588	Clip, Wire
21	48298	Fuse, 20 Amp
22	483629	Fuse Holder
23	483643	Cover, Sealed Single
24	483571	Cover, Sealed Double
25	481638	Switch, N/O
26	483013	Relay
27	482253	Diode
28	483958	Diode, 600V - 6A
29	461661	Clutch Assembly, GT3.5
	461826	Clutch Assembly, GT5
30	*	Battery, 350 CCA
31	04020-02	Nut, 1/4-20 UNC
32	04001-44	Bolt, Hex Head 1/4-20 x 1/2”
33	48029-30	Battery Cable, 44” Red w/Braid (Kohler EFI-LP)
	48029-29	Battery Cable, 18” Red w/Braid (31DFI) - Kawasaki
	48029-31	Battery Cable, 50” Red w/Braid (31BV,35BV & 37BV-EFI) - Briggs & Stratton
34	48029-24	Battery Cable, 39” Black (Kohler EFI-LP)
	48029-14	Battery Cable, 31-1/2” Black (31DFI) - Kawasaki
	48029-11	Battery Cable, 27” Black (31BV,35BV & 37BV-EFI) - Briggs & Stratton
35	48126	Rubber Boot
36	**	Fuel Pump
37	481670	Sender Unit, Water Temp. (Liquid Cooled Only)
38	485674	Fuse, 5 Amp

* Not available through Scag.
** Available through the individual engine manufacturer.

STTII ELECTRICAL SYSTEM - KUBOTA DIESEL

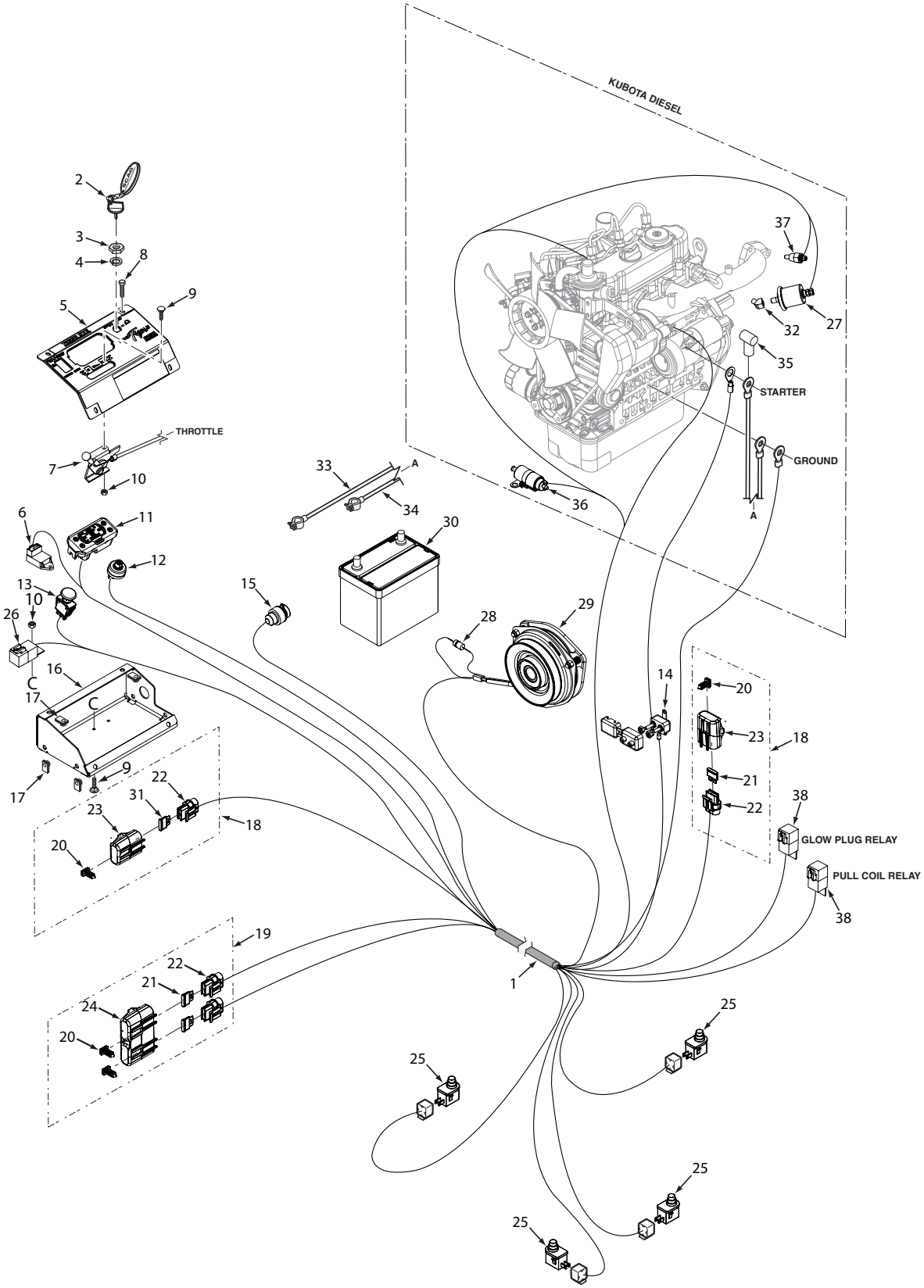

STTII ELECTRICAL SYSTEM - KUBOTA DIESEL

Ref. No.	Part No.	Description
1	486514	Wire Harness, STTII-25KBD
2	462069	Key Assy., w/Fob
3	48017-04	Nut, Hex 5/8-32
4	48017-03	Lockwasher, 5/8 Internal
5	462930	Instrument Panel w/Decal
6	483399	Timer, Glow Plug
7	483356	Control Cable, Throttle
8	04013-04	Capscrew, 1/4-20 x 3/4”
9	04003-43	Bolt, Carriage 10-24 x 1/2”
10	04021-26	Lock Nut, #10-24
11	484721	Cluster Gauge
12	48798	Key Switch
13	485833	Switch, PTO
14	486588	50 Amp Breaker
15	485568	Power Plug, 12V
16	427541	Base, Instrument Panel
17	04110-01	U-Nut, 1/4-20
18	485739	Single Fuse Assy., Excluding Fuse (incl. #20, 22, 23)
19	483642	Double Fuse Assy. (incl. #20, 21, 22, 24)
20	482588	Clip, Wire
21	48298	Fuse, 20 Amp
22	483629	Fuse Holder
23	483643	Cover, Sealed Single
24	483571	Cover, Sealed Double
25	481638	Switch, N/O
26	483013	Relay
27	481811	Sender Unit, Oil Pressure
28	483958	Diode, 600V - 6A
29	462011	Clutch Assembly, GT3.5
30	*	Battery, 525 CCA
31	485674	Fuse, 5 Amp
32	483433	Elbow, 45 Degree Street
33	481176-15	Battery Cable, 14” Red w/Braid
34	481176-11	Battery Cable, 21” Black
35	481335	Rubber Boot
36	**	Solenoid, Fuel Shut-Off
37	483360	Sender Unit, Water Temp.
38	481826	Relay

* Not available through Scag.
** Available through the engine manufacturer. Reference model and serial number.

REPLACEMENT DECALS AND INFORMATION PLATES

1

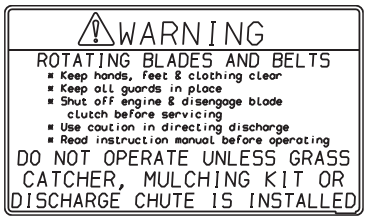

2

8

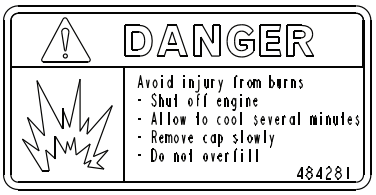

4

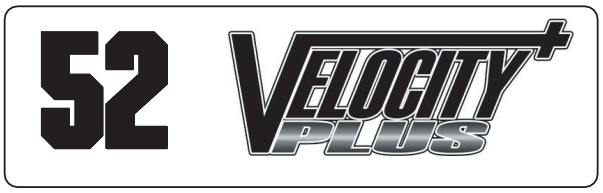

3

481568 6

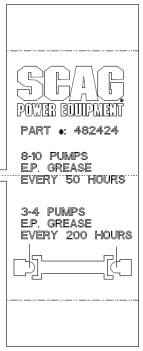

5

7

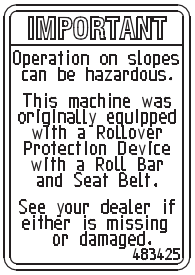

25

9

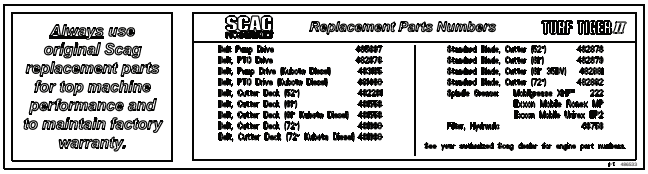

12

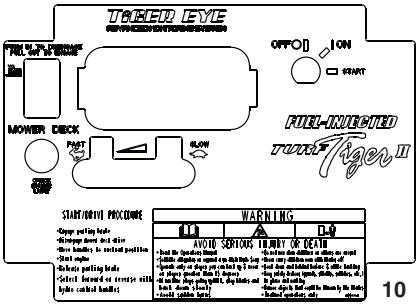

10

24

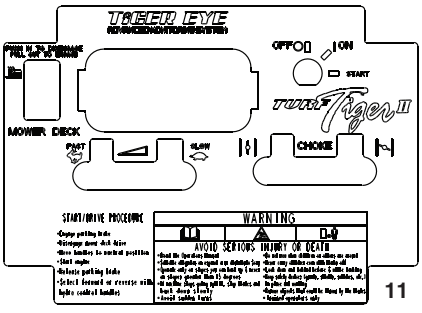

11

21

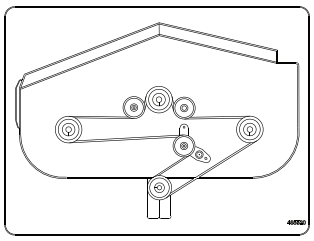
26

13

22

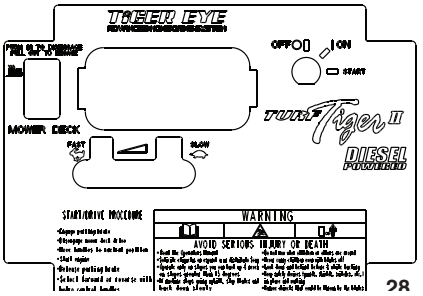

28

27

29

STTII 2019 Decals 1

REPLACEMENT DECALS AND INFORMATION PLATES

Ref. No.	Part No.	Description
1	483407	Decal, Danger - Spinning Blades
2	483406	Decal, Warning - Rotating Blades
3	483200	Decal, 52 Velocity Plus
	483201	Decal, 61 Velocity Plus
	483693	Decal, 72 Velocity Plus
4	484281	Decal, Fuel Tank - Gasoline Engines
	484292	Decal, Fuel Tank - Kubota Diesel
5	482434	Decal, Driveshaft
6	481568	Decal, Traction Control
7	486584	Decal, Parking Brake
8	485403	Decal, Metalcraft - USA
9	483402	Decal, Belt Cover
10	485664	Decal, Instrument Panel - Fuel Injected
11	485964	Decal, Instrument Panel
12	486533	Decal, STTII Replacement Parts
13	486572	Decal, Cutting Height - LH
14	484321	Decal, Fuel Tank Warning
15	484320	Decal, STT Adjustments
16	485685	Decal, Hood - STTII Fuel Injected
17	486570	Decal, Turf Tiger II
18	481664	Decal, Stripes-RH
19	481663	Decal, Stripes-LH
20	485680	Decal, Hood - STTII
21	483405	Decal, Warning
22	486573	Decal, Cutting Height - RH
23	485700	Decal, Turf Tiger II
24	483633	Decal, Seat Replacement
25	483425	Decal, ROPS
26	485520	Decal, Belt Routing (72V)
	485519	Decal, Belt Routing (52V/61V)
27	486571	Decal, Diesel Powered - Kubota Diesel
28	485965	Decal, Instrument Panel - Kubota Diesel
29	485379	Decal, Propane - Kohler LP-EFI
**	483900	Decal, Warning Spark Arrestor (California Models Only - not shown)
**	461982	Spanish Decal Kit, STT (not shown)
**	01411	DVD Video, Tips for Safe Operation of Your Scag Zero-Turn Mower (not shown)

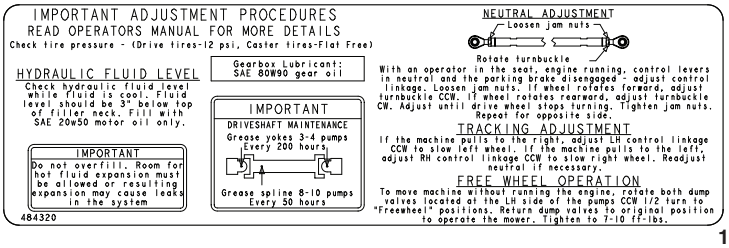

15

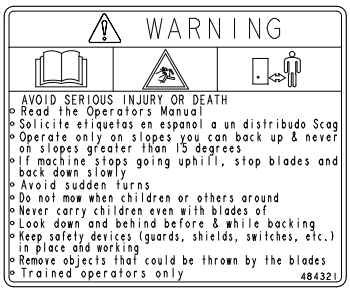

14

16

17

23

20

18

19

2017 STT Decals Page2

ELECTRICAL SCHEMATIC - KOHLER EFI (LP)

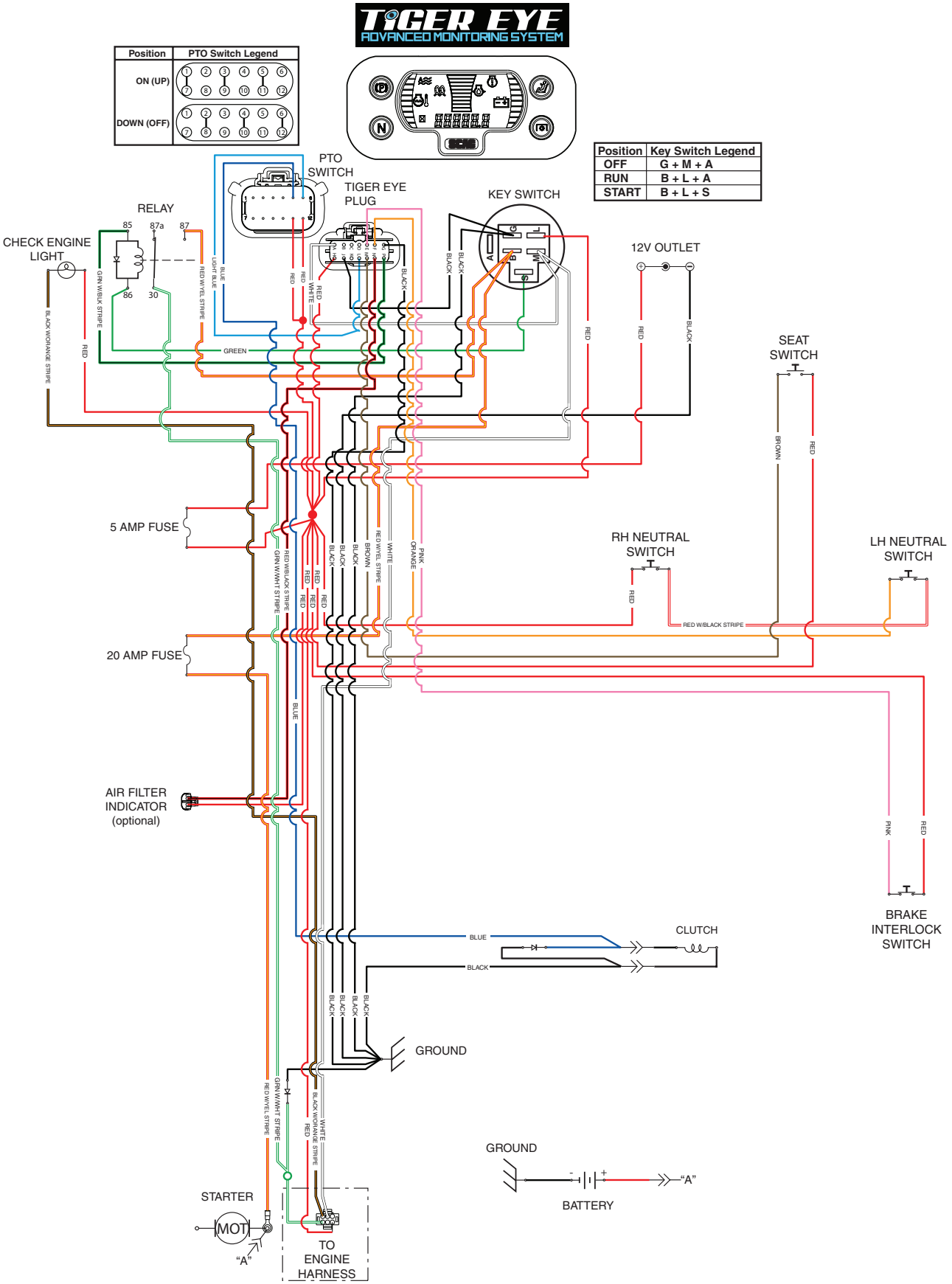

ELECTRICAL SCHEMATIC - KUBOTA 25KBD

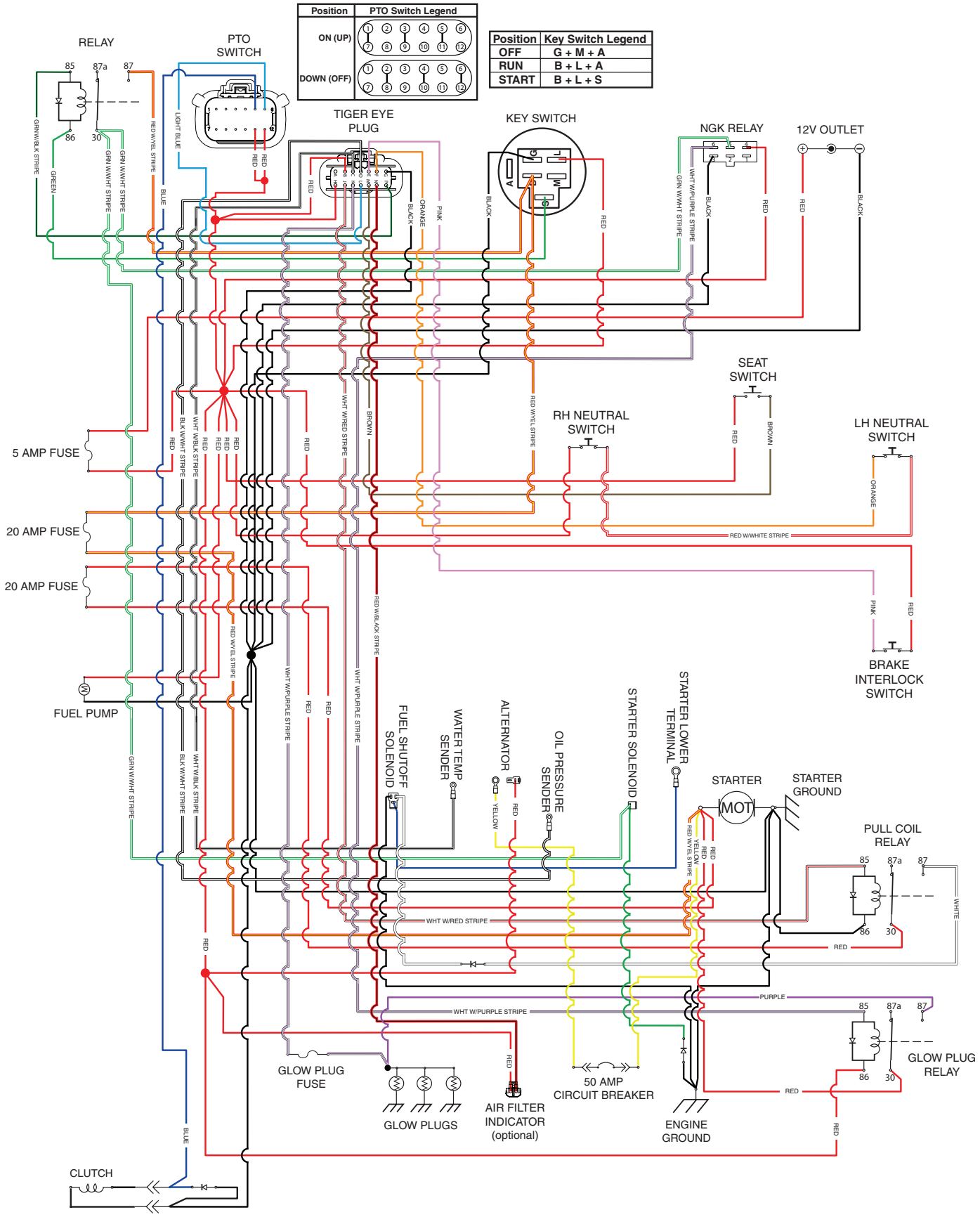

ELECTRICAL SCHEMATIC - KAWASAKI 31DFI

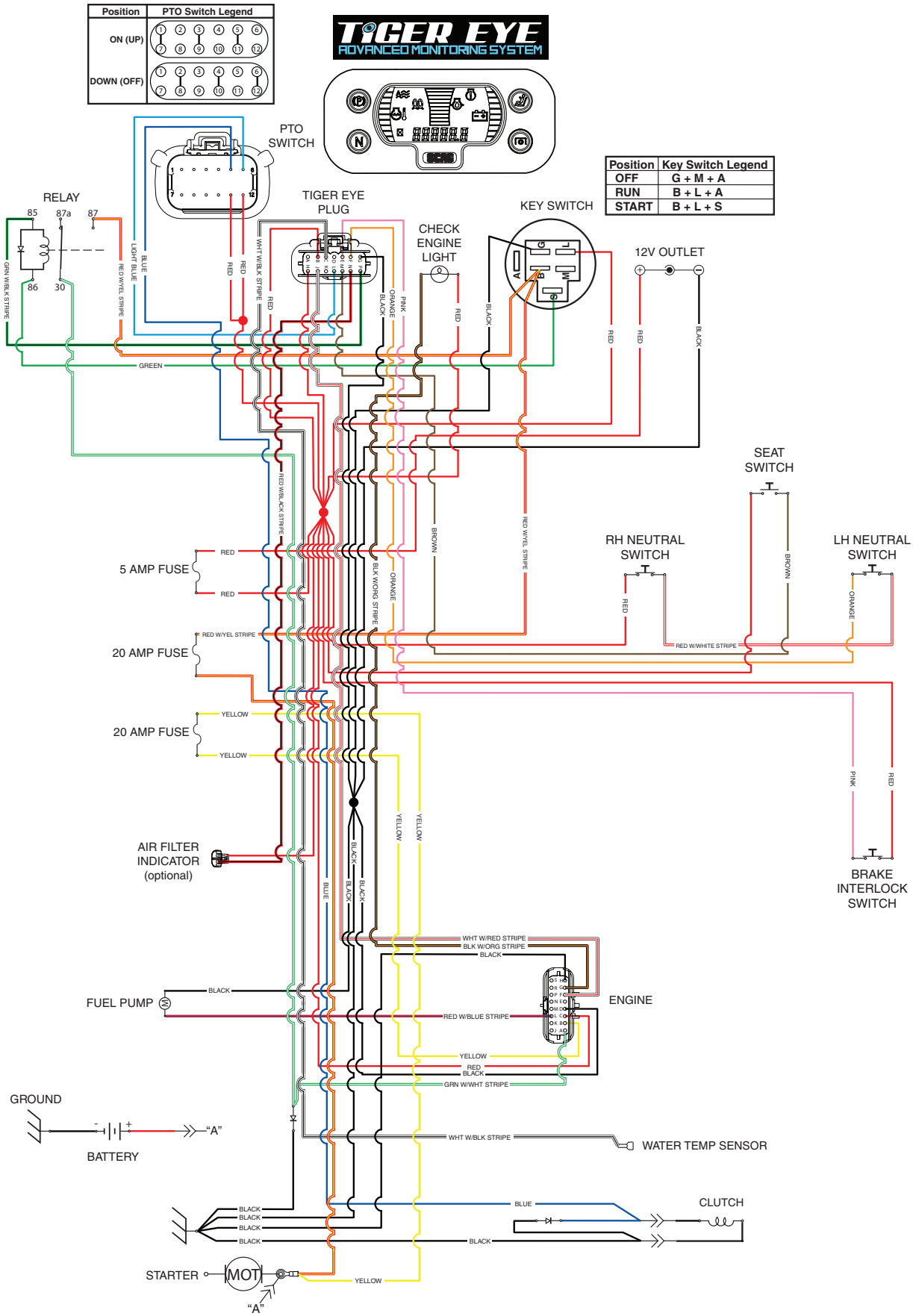

ELECTRICAL SCHEMATIC - BRIGGS & STRATTON 31BV & 35BV

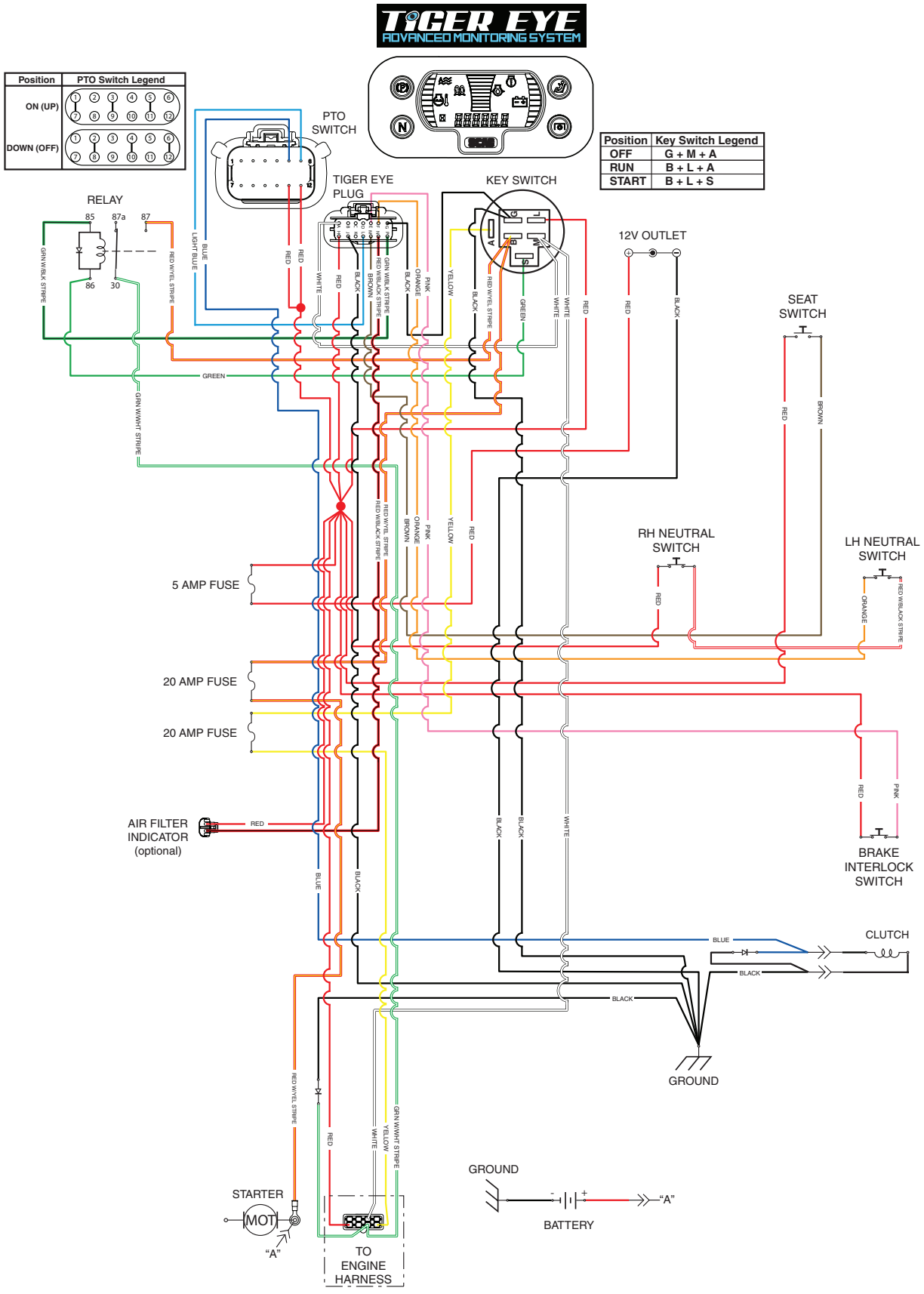
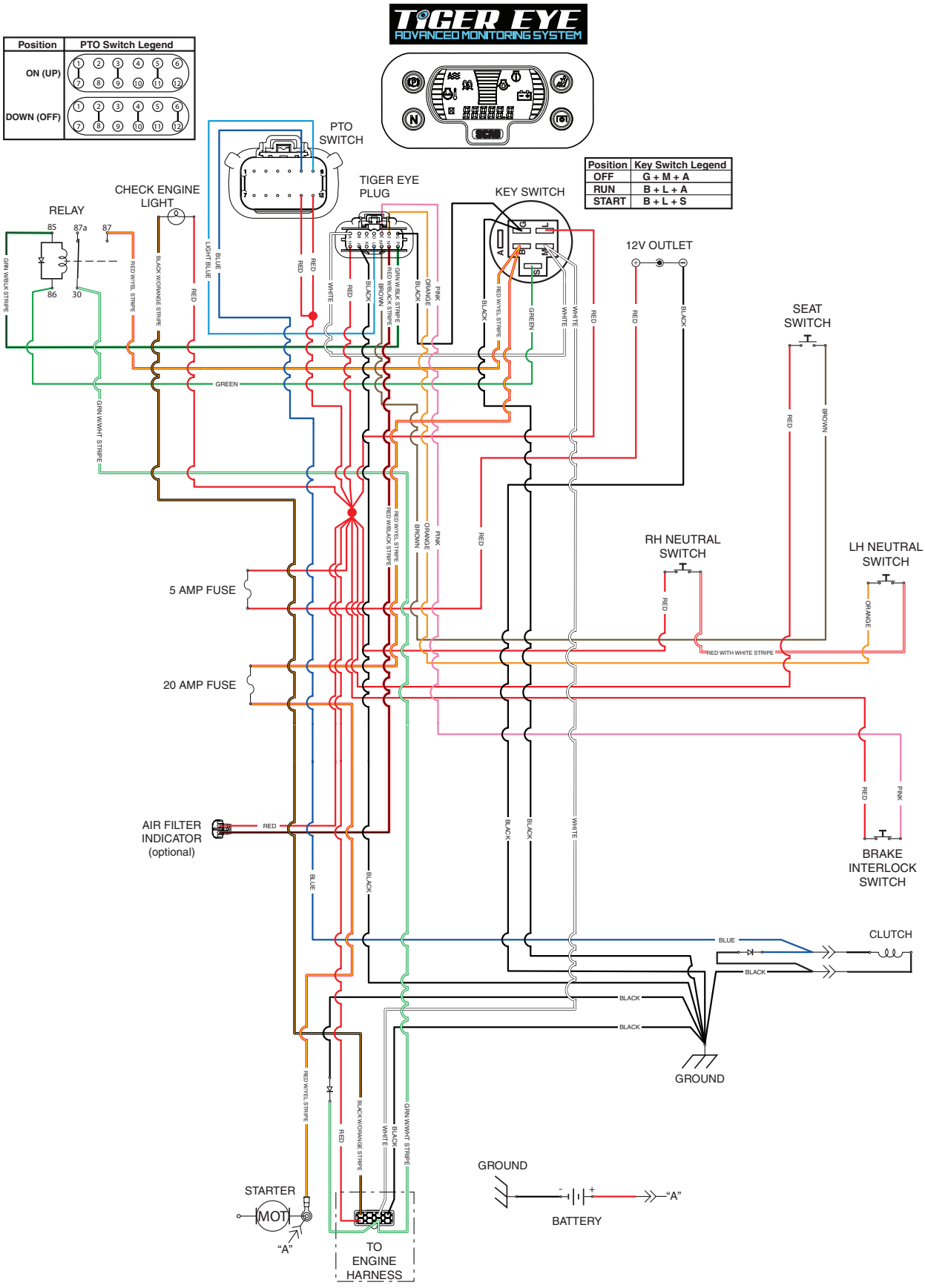
ELECTRICAL SCHEMATIC - BRIGGS & STRATTON 37BV-EFI