SCAG POWER EQUIPMENT

ILLUSTRATED PARTS MANUAL

V-RIDE LS



© 2027
Scag Power Equipment
Division of Metalcraft of Mayville, Inc.

PART NO. 06467
PRINTED 10/2026
PRINTED IN USA

Congratulations on owning a Scag V-Ride LS mower! This manual contains the illustrated parts list for your machine. Reading this manual can provide you with assistance in locating and identifying components during maintenance and repair procedures. Please read all the information enclosed in this manual before attempting to maintain or repair your machine.

The QR code on the front cover of this manual can be scanned with your mobile device to access manuals, parts lists, and other product information on the official Scag website.

This manual covers the illustrated parts list for:		
SVLS-36H-18FSE	**with a serial number of**	**206D00001 to 206D99999**
SVLS-42H-18FSE	**with a serial number of**	**207D00001 to 207D99999**
SVLS-48H-22FSE	**with a serial number of**	**208D00001 to 208D99999**
SVLS-48H-25CX	**with a serial number of**	**209D00001 to 209D99999**
SVLS-52H-22FSE	**with a serial number of**	**210D00001 to 210D99999**
SVLS-52H-25CX	**with a serial number of**	**211D00001 to 211D99999**
SVLS-36H-20CX	**with a serial number of**	**215D00001 to 215D99999**
SVLS-42H-20CX	**with a serial number of**	**216D00001 to 216D99999**
Always use the entire serial number listed on the serial number tag when referring to this product.		

Model Number:	**Serial Number:**

Please use the table provided above to record the model number and serial number located on your machine for future reference.

⚠ WARNING

YOUR MACHINE IS ONLY AS SAFE AS THE OPERATOR. HAZARD CONTROL AND ACCIDENT PREVENTION ARE DEPENDENT UPON THE AWARENESS, CONCERN, PRUDENCE, AND PROPER TRAINING OF THE PERSONNEL INVOLVED IN THE OPERATION, TRANSPORT, MAINTENANCE, AND STORAGE OF THE EQUIPMENT.

- **Carefully read and understand the safety and operating instructions described in this manual. Always keep a copy of this manual with the machine.**
- **Ensure every operator is properly trained and thoroughly familiar with all controls and procedures before operating the machine.**
- **Always follow OSHA-approved operating procedures when operating the machine.**
- **Keep all shields, guards, and plates in place when operating the machine. Do not remove the grass discharge chute while the machine is running.**
- **Stay two machine widths away from slopes, drop-offs, ditches, embankments, retaining walls, water, or other obstacles.**
- **Do not mow on wet grass. Wet grass reduces traction and steering control.**
- **Under no circumstances should the machine be operated on slopes greater than 20 degrees. Do not reverse down slopes or ramps.**
- **Keep hands, feet, and clothing away from moving parts at all times.**
- **Do not carry passengers on the machine.**
- **Do not operate the machine when children or bystanders are present.**
- **If a mechanism becomes clogged during operation, stop the engine before cleaning.**
- **Before performing any maintenance or service, stop the machine and remove the ignition key.**

⚠ WARNING

CALIFORNIA PROPOSITION 65

The engine exhaust produced by this machine contains chemicals known to the State of California to cause cancer, birth defects, or other reproductive harm.

Battery posts, terminals, and related accessories for this machine contain lead and lead compounds, chemicals known to the State of California to cause cancer, birth defects, or other reproductive harm. Wash hands after handling components.

The use of this machine may expose the operator to chemicals known to the State of California to cause cancer, birth defects, or other reproductive harm.

NOTES

PAGE LEFT INTENTIONALLY BLANK

Table of Contents

SECTION 1 - ILLUSTRATED PARTS LIST 1

SCAG APPROVED ATTACHMENTS AND ACCESSORIES 1
36H CUTTER DECK 3
42H CUTTER DECK 5
48H CUTTER DECK 7
52H CUTTER DECK 9
CUTTER DECK CONTROLS 11
SHEET METAL COMPONENTS 13
STEERING CONTROLS 15
FUEL SYSTEM AND ENGINE EXHAUST 17
DRIVE SYSTEM COMPONENTS 19
CONTROL PANEL AND ELECTRICAL SYSTEM 21
ZT-3100 HYDRAULIC TRANSAXLE ASSEMBLY 23
REPLACEMENT DECALS 25
ELECTRICAL SCHEMATICS (HARNESS) 26
ELECTRICAL SCHEMATICS (ADAPTERS) 27

LIMITED WARRANTY - SVLS ..... INSIDE BACK COVER

NOTES

PAGE LEFT INTENTIONALLY BLANK

ILLUSTRATED PARTS LIST

8.1 SCAG APPROVED ATTACHMENTS AND ACCESSORIES

Attachments and accessories manufactured by companies other than Scag Power Equipment or Metalcraft of Mayville must be approved for use on this machine by Scag Power Equipment. Any alterations or modifications made to the machine that change the performance, durability, or allow the use of unapproved attachments and accessories will not be covered by warranty.

Accessories	P/N
Grass Collection Systems	
GC-F4 (Fabric Grass Catcher)	926Z
Mulching Accessories	
Mulch Plate (36H / 42H)	927Z
Mulch Plate (48H)	928B
Mulch Plate (52H)	928C
Hurricane Mulch System (36H)	927N
Hurricane Mulch System (42H)	929C
Hurricane Mulch System (48H)	927S
Hurricane Mulch System (52H)	927F

Accessories	P/N
Miscellaneous	
Blade Buddy	9212
Anti-Blowout Kit (36H)	928F
Height of Cut Kit	463992
Scag Premium Lubricants	
Chassis Grease	486257
Hydraulic System Oil (1 QT)	486255
Hydraulic System Oil (1 Gallon)	486254
Scag Touch-Up Paints	
Cat's Eye Gold (Bottle w/ Brush)	484540-01
Cat's Eye Gold (Aerosol Spray Can)	48521
Textured Black (Aerosol Spray Can)	486269

IPL LEGEND	
Abbrev.	**Description**
HH	Hex Head
SH	Socket Head
HWH	Hex Washer Head
HSH	Hex Socket Head
FLG	Flange
SERR	Serrated
ES	Elastic Stop
HD	Hardened
TT	Taptite
GR	Grade
NPT	Tapered Thread

36H CUTTER DECK

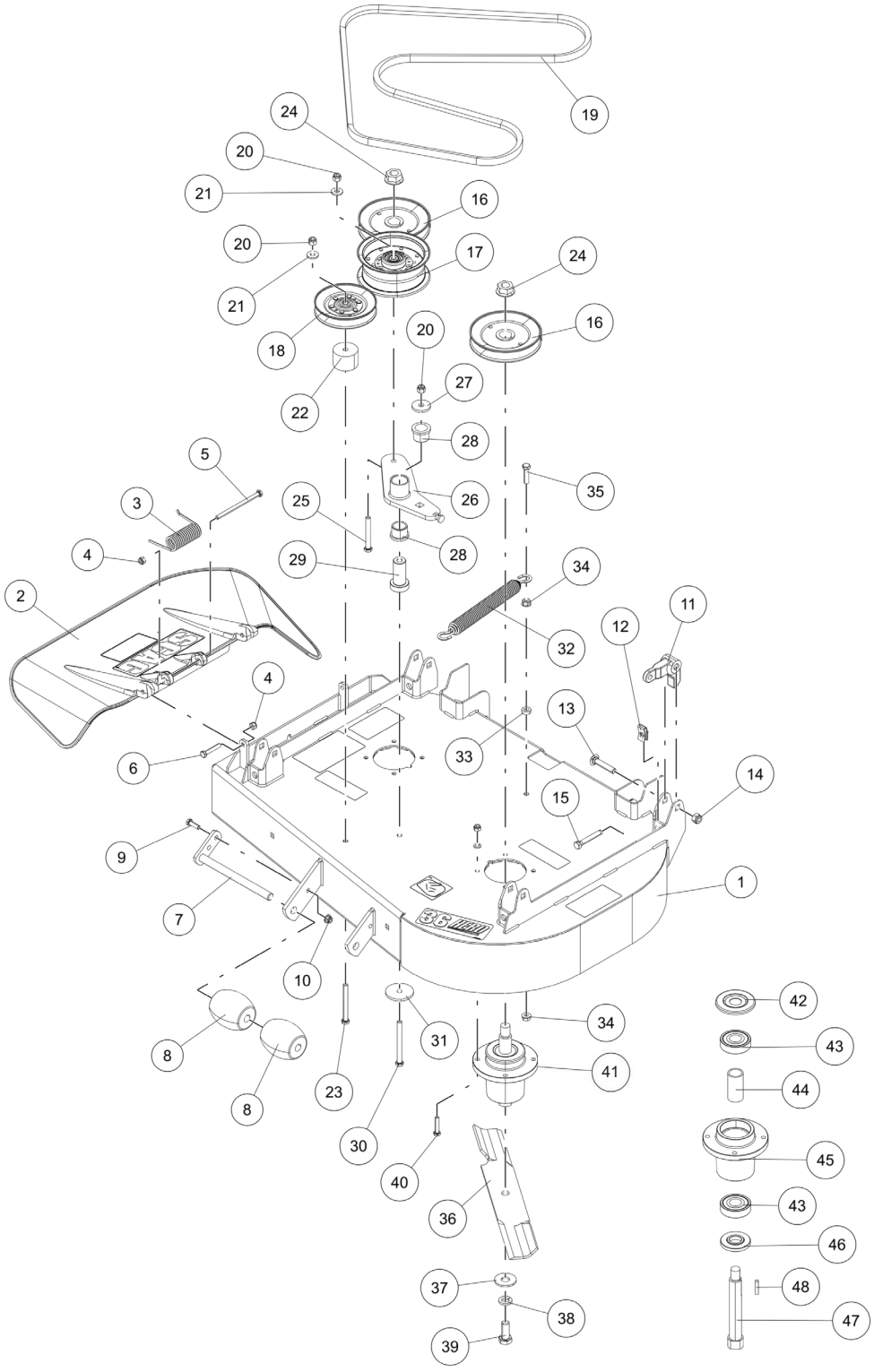

36H CUTTER DECK

Ref. No.	Part No.	Description
1	463923	Cutter Deck w/ Decals (36H)
2	462031	Discharge Chute Assy.
3	482245	Spring, Discharge Chute
4	04021-10	Locknut, 5/16-18 ES
5	04001-154	Cap Screw, 5/16-18 x 4.75 HH
6	04001-12	Cap Screw, 5/16-18 x 1.75 HH
7	451926	Shaft Weldment, Guide Roller
8	482295	Wheel, Anti-Scalp
9	04001-09	Cap Screw, 5/16-18 x 1.00 HH
10	04117-01	Locknut, 5/16-18 FLG HH ES
11	485528	Lever, Deck Level
12	04110-03	U-Nut, 3/8-16
13	04003-42	Carriage Bolt, 7/16-14 x 2.25
14	04021-11	Locknut, 7/16-14 ES
15	04107-05	Cap Screw, 3/8-16 x 2.50 HH
16	483324	Pulley, 5.73"
17	483210	Pulley, Idler (5.00")
18	48181	Pulley, Idler
19	486023	Belt, Cutter Deck
20	04021-09	Locknut, 3/8-16 ES
21	04043-04	Flat Washer, 3/8-.391 x .938 x .105 HD
22	431438	Spacer, Pulley
23	04001-77	Cap Screw, 3/8-16 x 3.50 HH
24	04112-06	Locknut, 3/4-16 Spiral Lock
25	04001-54	Cap Screw, 3/8-16 x 3.00 HH
26	463851	Idler Arm Assy. (Incl. 28)
27	04043-11	Flat Washer, 3/8-.438 x 1.50 x .1793 HD
28	483453-03	Bearing, Plastic
29	43708	Pivot, Idler
30	04001-30	Cap Screw, 3/8-16 x 4.00 HH
31	04041-38	Flat Washer, 3/8-.406 x 2.25 x .1875
32	484020	Spring, Cutter Deck
33	43063	Spacer, Clutch Control
34	04019-04	Nut, 3/8-16 SERR FLG
35	04001-136	Cap Screw, 3/8-16 x 1.50 HH GR 8

Ref. No.	Part No.	Description
36	482878	Cutter Blade, 18"
37	04043-06	Flat Washer, 5/8-.688 x 1.75 x .134 HD
38	04030-07	Lock Washer, 5/8 ANSI Helical Spring
39	04001-121	Cap Screw, 5/8-11 x 1.50 HH
40	04001-175	Cap Screw, 5/16-18 x 1.50 HH GR 8
41	461950	Spindle Assy. (Incl. 42, 43, 44, 45, 46, 47, 48)
42	483304	Debris Shield
43	483303	Bearing, Ball
44	43693	Spacer, Bearing
45	462017	Spindle Housing (Incl. 43, 44)
46	43694	Protector, Bearing
47	43695	Shaft, Spindle
48	04063-01	Key, 1/4 x 1/4 x 1.25

42H CUTTER DECK

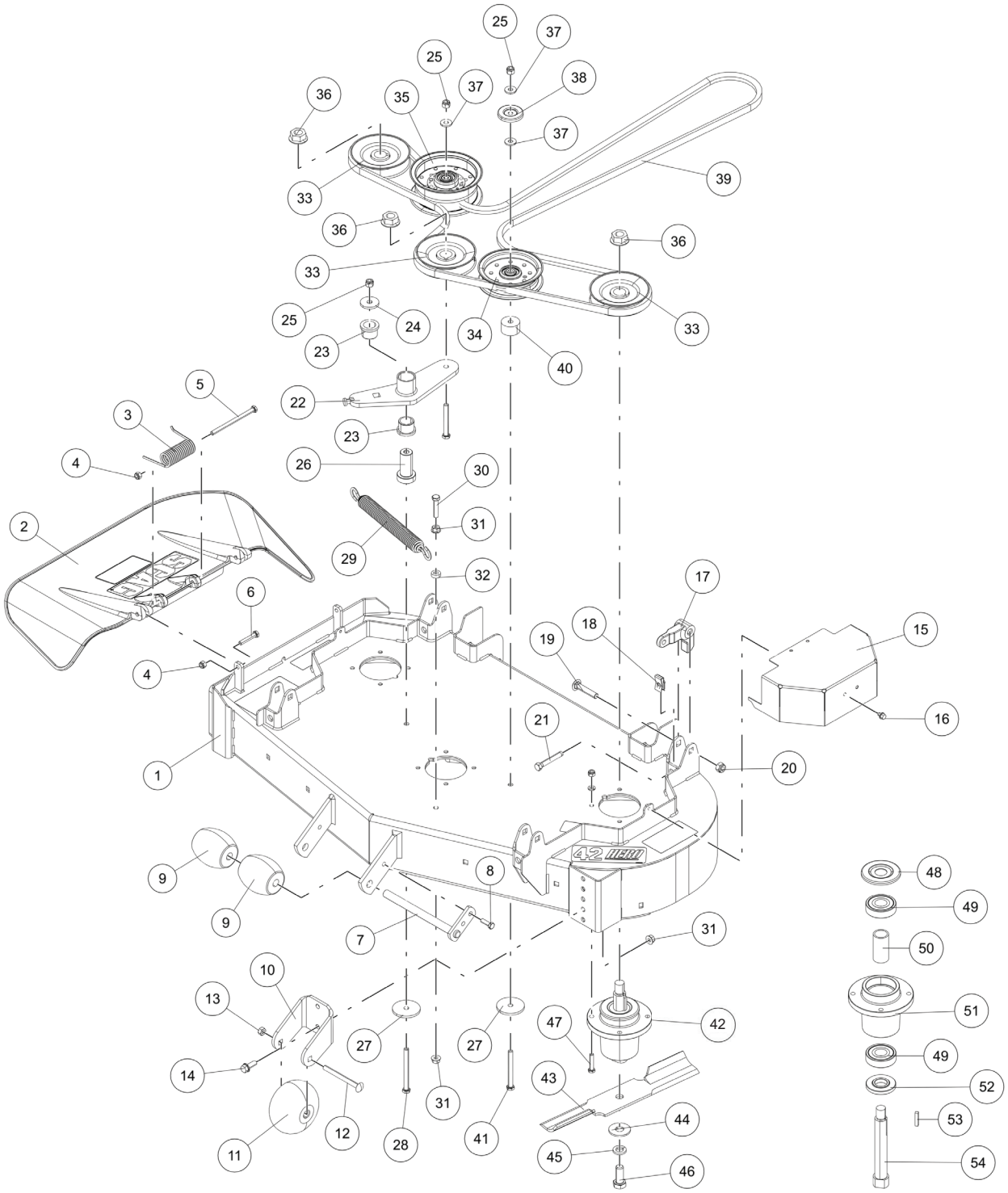

42H CUTTER DECK

Ref. No.	Part No.	Description
1	463924	Cutter Deck w/ Decals (42H)
2	462031	Discharge Chute Assy.
3	482245	Spring, Discharge Chute
4	04021-10	Locknut, 5/16-18 ES
5	04001-154	Cap Screw, 5/16-18 x 4.75 HH
6	04001-12	Cap Screw, 5/16-18 x 1.75 HH
7	451926	Shaft Weldment, Guide Roller
8	04001-09	Cap Screw, 5/16-18 x 1.00
9	482295	Wheel, Anti-Scalp
10	427865	Bracket, Anti-Scalp Wheel
11	481632	Wheel, Anti-Scalp
12	04003-26	Carriage Bolt, 3/8-16 x 4.00 RHSN
13	04021-05	Locknut, 3/8-16 Center Lock
14	04017-27	Cap Screw, 3/8-16 x 1.00 SERR FLG HH
15	4201938	Belt Cover
16	04011-29	Screw, 1/4-20 x .375 HWH Shockproof
17	485528	Lever, Deck Level
18	04110-03	U-Nut, 3/8-16
19	04003-42	Carriage Bolt, 7/16-14 x 2.25
20	04021-11	Locknut, 7/16-14 ES
21	04107-05	Cap Screw, 3/8-16 x 2.50 HH Special Lock
22	463883	Idler Arm w/ Bushings (Incl. 23)
23	483453-03	Bearing, Plastic
24	04043-11	Flat Washer, 3/8-.438 x 1.50 x .1793 HD
25	04021-09	Locknut, 3/8-16 ES
26	43708	Pivot, Idler
27	04041-38	Flat Washer, 3/8-.406 x 2.25 x .1875
28	04001-30	Cap Screw, 3/8-16 x 4.00 HH
29	484020	Spring, Cutter Deck
30	04001-135	Cap Screw, 3/8-16 x 1.75 HH
31	04019-04	Nut, 3/8-16 SERR FLG
32	43063	Spacer, Clutch Control
33	486910	Pulley, 4.62"
34	483213	Pulley, Idler (4.50")
35	483210	Pulley, Idler (5.00")

Ref. No.	Part No.	Description
36	04112-06	Locknut, 3/4-16 Spiral Lock
37	04043-04	Flat Washer, 3/8-.391 x .938 x .105 HD
38	424367	Dust Shield
39	489123	Belt, Cutter Deck
40	43711	Spacer
41	04001-77	Cap Screw, 3/8-16 x 3.50 HH
42	461950	Spindle Assy. (Incl. 48, 49, 50, 51, 52, 53, 54)
43	483014	Cutter Blade, 14.75"
44	04043-06	Flat Washer, 5/8-.688 x 1.75 x .134 HD
45	04030-07	Lock Washer, 5/8 ANSI Helical Spring
46	04001-121	Cap Screw, 5/8-11 x 1.50 HH
47	04001-175	Cap Screw, 5/16-18 x 1.50 HH GR 8
48	483304	Debris Shield
49	483303	Bearing, Ball
50	43693	Spacer, Bearing
51	462017	Spindle Housing (Incl. 49, 50)
52	43694	Protector, Bearing
53	04063-01	Key, 1/4 x 1/4 x 1.25
54	43695	Shaft, Spindle

48H CUTTER DECK

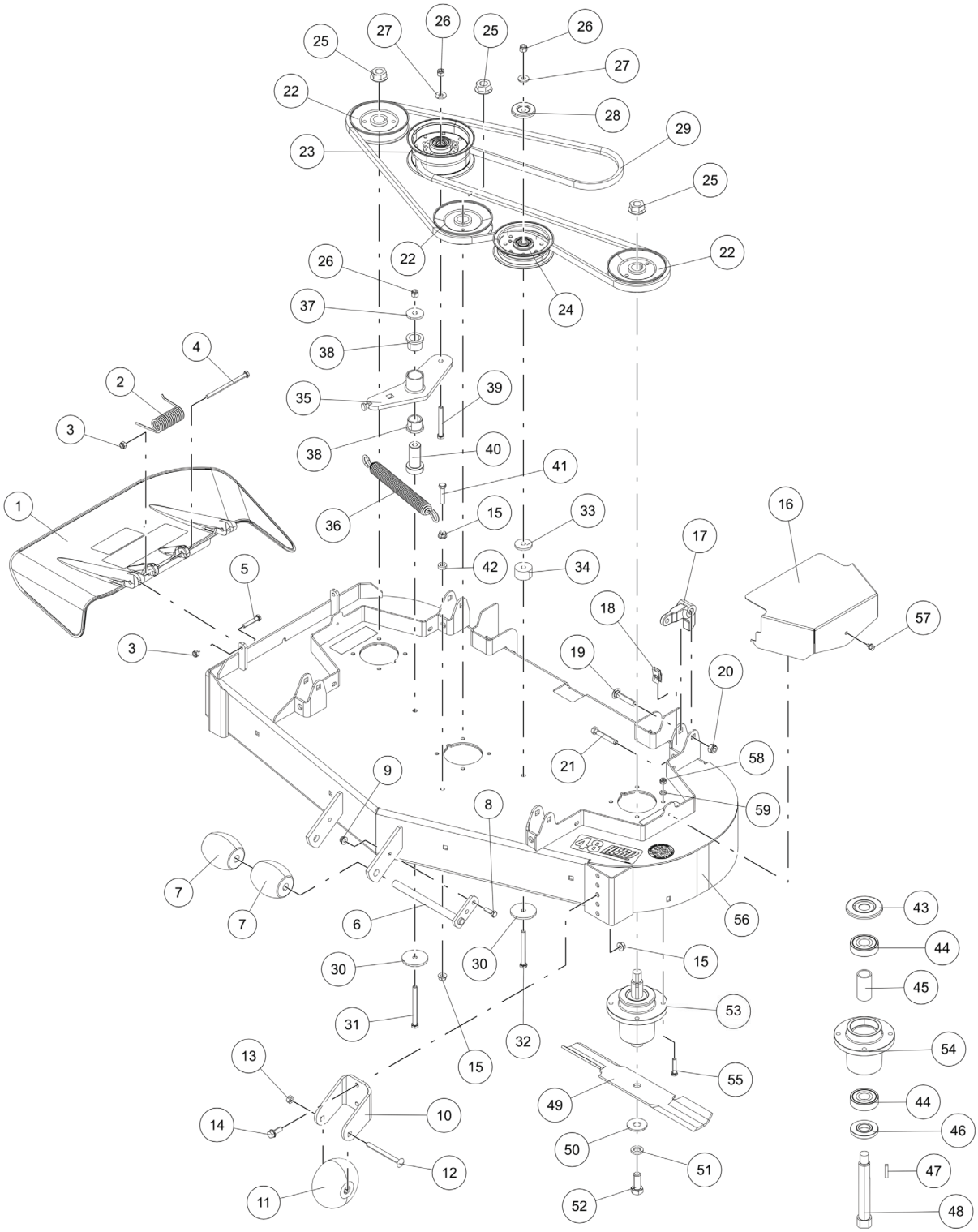

48H CUTTER DECK

Ref. No.	Part No.	Description
1	462031	Discharge Chute Assy.
2	482245	Spring, Discharge Chute
3	04021-10	Locknut, 5/16-18 ES
4	04001-154	Cap Screw, 5/16-18 x 4.75 HH
5	04001-12	Cap Screw, 5/16-18 x 1.75 HH
6	451926	Shaft Weldment, Guide Roller
7	482295	Wheel, Anti-Scalp
8	04001-09	Cap Screw, 5/16-18 x 1.00 HH
9	04117-01	Locknut, 5/16-18 FLG HH ES
10	427865	Bracket, Anti-Scalp Wheel
11	481632	Wheel, Anti-Scalp
12	04003-26	Carriage Bolt, 3/8-16 x 4.00 RHSN
13	04021-05	Locknut, 3/8-16 Center Lock
14	04017-27	Cap Screw, 3/8-16 x 1.00 SERR FLG HH
15	04019-04	Nut, 3/8-16 SERR FLG
16	4201930	Belt Cover
17	485528	Lever, Deck Level
18	04110-03	U-Nut, 3/8-16
19	04003-42	Carriage Bolt, 7/16-14 x 2.25
20	04021-11	Locknut, 7/16-14 ES
21	04107-05	Cap Screw, 3/8-16 x 2.50 HH Special Lock
22	483323	Pulley, 5.13"
23	483210	Pulley, Idler (5.00")
24	483213	Pulley, Idler (4.50")
25	04112-06	Locknut, 3/4-16 Spiral Lock
26	04021-09	Locknut, 3/8-16 ES
27	04043-04	Flat Washer, 3/8-.391 x .938 x .105 HD
28	424367	Dust Shield
29	483966	Belt, Cutter Deck
30	04041-38	Flat Washer, 3/8-.406 x 2.25 x .1875
31	04001-30	Cap Screw, 3/8-16 x 4.00 HH
32	04001-77	Cap Screw, 3/8-16 x 3.50 HH
33	04041-11	Flat Washer, 3/8-.406 x 1.50 x .1793
34	43711	Spacer
35	463883	Idler Arm w/ Bushings (Incl. 38)

Ref. No.	Part No.	Description
36	484020	Spring, Cutter Deck
37	04043-11	Flat Washer, 3/8-.438 x 1.50 x .1793 HD
38	483453-03	Bearing, Plastic
39	04001-54	Cap Screw, 3/8-16 x 3.00 HH
40	43708	Pivot, Idler
41	04001-135	Cap Screw, 3/8-16 x 1.75 HH
42	43063	Spacer, Clutch Control
43	483304	Debris Shield
44	483303	Bearing, Ball
45	43693	Spacer, Bearing
46	43694	Protector, Bearing
47	04063-01	Key, 1/4 x 1/4 x 1.25
48	43695	Shaft, Spindle
49	482877	Cutter Blade, 16.5"
50	04043-06	Flat Washer, 5/8-.688 x 1.75 x .134 HD
51	04030-07	Lock Washer, 5/8 ANSI Helical Spring
52	04001-121	Cap Screw, 5/8-11 x 1.50 HH
53	461950	Spindle Assy. (Incl. 44, 45, 46, 47, 48, 49, 55)
54	462014	Spindle Housing (Incl. 44, 45)
55	04001-175	Cap Screw, 5/16-18 x 1.50 HH GR 8
56	463925	Cutter Deck w/ Decals (48H)
57	04011-29	Screw, 1/4-20 x .375 HWH Shockproof
58	04021-22	Locknut, 5/16-18 ES GR 8
59	04030-03	Lock Washer, 5/16 ANSI Helical Spring

52H CUTTER DECK

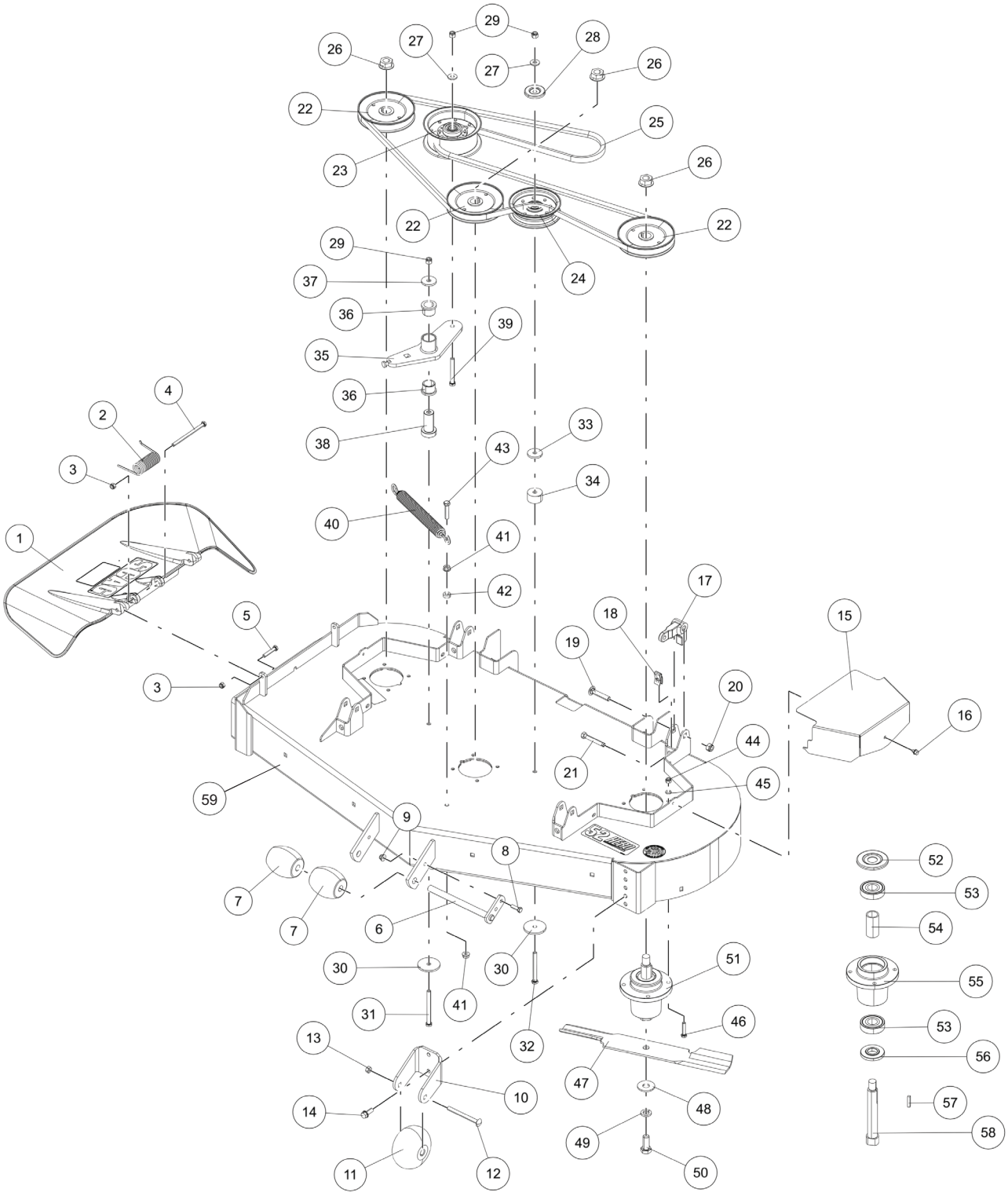

52H CUTTER DECK

Ref. No.	Part No.	Description
1	462032	Discharge Chute Assy.
2	482245	Spring, Discharge Chute
3	04021-10	Locknut, 5/16-18 ES
4	04001-154	Cap Screw, 5/16-18 x 4.75 HH
5	04001-12	Cap Screw, 5/16-18 x 1.75 HH
6	451926	Shaft Weldment, Guide Roller
7	482295	Wheel, Anti-Scalp
8	04001-09	Cap Screw, 5/16-18 x 1.00 HH
9	04117-01	Locknut, 5/16-18 FLG HH ES
10	427865	Bracket, Anti-Scalp Wheel
11	481632	Wheel, Anti-Scalp
12	04003-26	Carriage Bolt, 3/8-16 x 4.00 RHSN
13	04021-05	Locknut, 3/8-16 Center Lock
14	04017-27	Cap Screw, 3/8-16 x 1.00 SERR FLG HH
15	4201930	Belt Cover
16	04011-29	Screw, 1/4-20 x .375 HWH Shockproof
17	485528	Lever, Deck Level
18	04110-03	U-Nut, 3/8-16
19	04003-42	Carriage Bolt, 7/16-14 x 2.25
20	04021-11	Locknut, 7/16-14 ES
21	04107-05	Cap Screw, 3/8-16 x 2.50 HH Special Lock
22	483324	Pulley, 5.73"
23	483210	Pulley, Idler (5.00")
24	483213	Pulley, Idler (4.50")
25	484100	Belt, Cutter Deck
26	04112-06	Locknut, 3/4-16 Spiral Lock
27	04043-04	Flat Washer, 3/8-.391 x .938 x .105 HD
28	424367	Dust Shield
29	04021-09	Locknut, 3/8-16 ES
30	04041-38	Flat Washer, 3/8-.406 x 2.25 x .1875
31	04001-30	Cap Screw, 3/8-16 x 4.00 HH
32	04001-77	Cap Screw, 3/8-16 x 3.50 HH
33	04041-11	Flat Washer, 3/8-.406 x 1.50 x .1793
34	43711	Spacer
35	463883	Idler Arm w/ Bushings (Incl. 36)

Ref. No.	Part No.	Description
36	483453-03	Bearing, Plastic
37	04043-11	Flat Washer, 3/8-.438 x 1.50 x .1793 HD
38	43708	Pivot, Idler
39	04001-54	Cap Screw, 3/8-16 x 3.00 HH
40	484020	Spring, Cutter Deck
41	04019-04	Nut, 3/8-16 SERR FLG
42	43063	Spacer, Clutch Control
43	04001-135	Cap Screw, 3/8-16 x 1.75 HH
44	04021-22	Locknut, 5/16-18 ES GR 8
45	04030-03	Lock Washer, 5/16 ANSI Helical Spring
46	04001-175	Cap Screw, 5/16-18 x 1.50 HH GR 8
47	482878	Cutter Blade, 18"
48	04043-06	Flat Washer, 5/8-.688 x 1.75 x .134 HD
49	04030-07	Lock Washer, 5/8 ANSI Helical Spring
50	04001-121	Cap Screw, 5/8-11 x 1.50 HH
51	461950	Spindle Assy. (Incl. 52, 53, 54, 55, 56, 57, 58)
52	483304	Debris Shield
53	483303	Bearing, Ball
54	43693	Spacer, Bearing
55	462014	Spindle Housing (Incl. 53, 54)
56	43694	Protector, Bearing
57	04063-01	Key, 1/4 x 1/4 x 1.25
58	43695	Shaft, Spindle
59	463926	Cutter Deck w/ Decals (52H)

CUTTER DECK CONTROLS

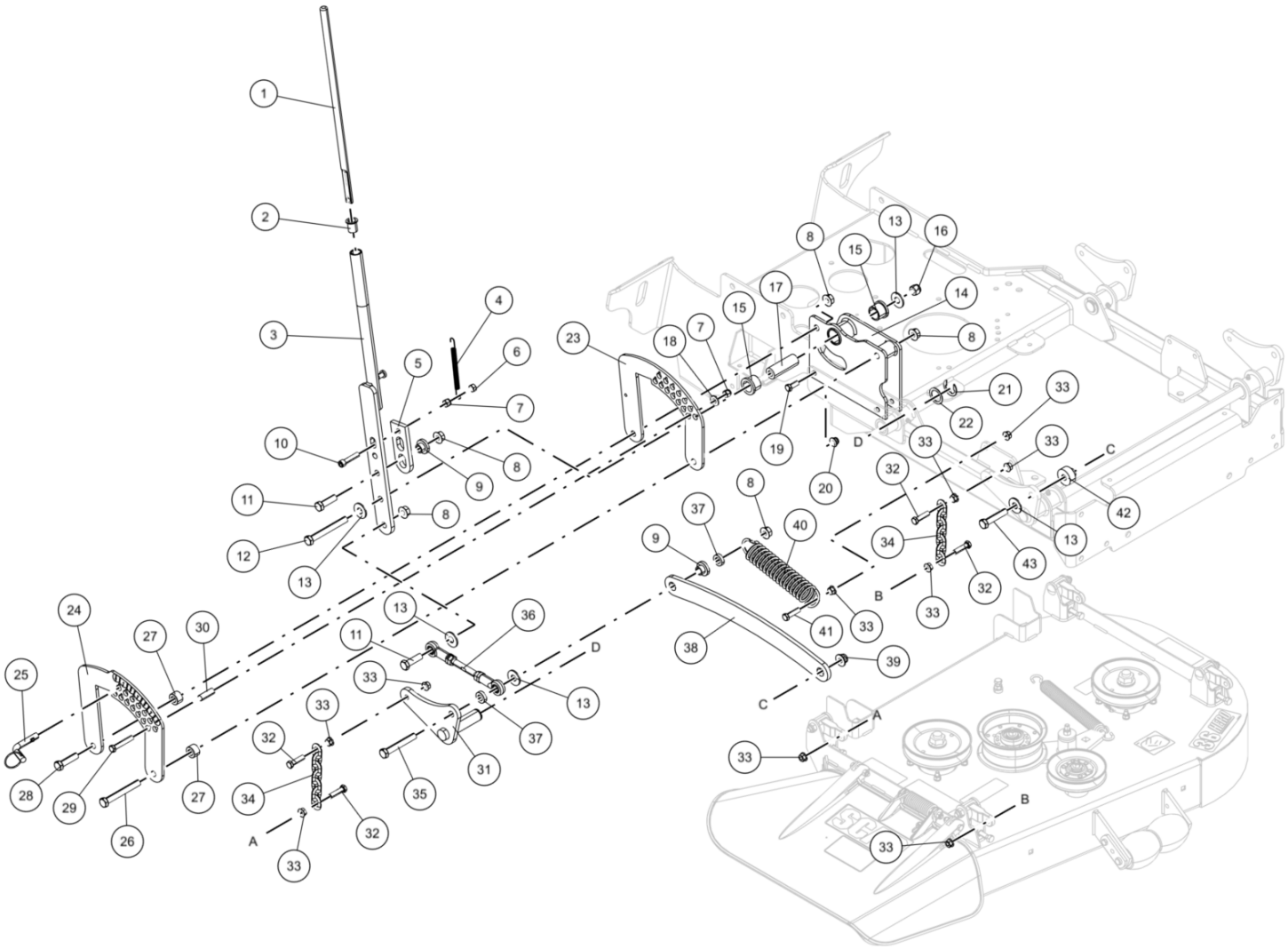

CUTTER DECK CONTROLS

Ref. No.	Part No.	Description
1	43747	Actuator Rod, Deck Latch
2	483453-14	Bearing, Plastic
3	452811	Handle Weldment, Deck Latch
4	483600	Spring, Deck Latch
5	424652	Deck Latch, Outer
6	04021-05	Locknut, 3/8-16 Center Lock
7	04021-09	Locknut, 3/8-16 ES
8	04019-06	Nut, 1/2-13 SERR FLG
9	431087	Bushing, Deck Lift
10	04015-41	Cap Screw, 3/8-16 UNC x 1.75 SH
11	04001-183	Cap Screw, 1/2-13 x 1.75 HH
12	04001-194	Cap Screw, 1/2-13 x 4.25 HH
13	04043-08	Flat Washer, 1/2-.562 x .1375 x .109 HD
14	462951	Inner Support, Deck Lift
15	483453-03	Bearing, Plastic
16	04021-07	Locknut, 1/2-13 ES
17	43872	Sleeve, Brake Pivot
18	04041-07	Flat Washer, 3/8-.391 x .938 x .105
19	04001-19	Cap Screw, 3/8-16 x 1.00 HH
20	04117-02	Locknut, 3/8-16 FLG HH ES
21	04050-08	Retainer Ring
22	04041-14	Flat Washer, 1-1.062 x 1.50 x .0478
23	427219	Inner Bracket, Deck Height
24	427288	Outer Bracket, Deck Height
25	485857	Pin, Deck Height
26	04001-87	Cap Screw, 1/2-13 x 4.00 HH
27	43806	Spacer, Deck Linkage
28	04001-72	Cap Screw, 1/2-13 x 2.00 HH
29	04001-46	Cap Screw, 3/8-16 x 2.25 HH
30	43668	Pivot, Deck Latch
31	452809	Lift Arm, Deck
32	04001-136	Cap Screw, 3/8-16 x 1.50 HH GR 8
33	04019-04	Nut, 3/8-16 SERR FLG
34	462940	Deck Chain Assembly (Incl. 32, 33)
	485864	Deck Chain
35	04001-145	Cap Screw, 1/2-13 x 3.50 HH

Ref. No.	Part No.	Description
36	486821	Linkage Assy., Deck Lift
	486819	Link, Deck Lift
	481765	Rod End (RH)
	481766	Rod End (LH)
	04020-27	Jam Nut, 1/2-20 UNF (RH)
	04020-28	Jam Nut, 1/2-20 UNF (LH)
37	43508	Spacer
38	428490	Link, Deck Lift
39	04117-04	Locknut, 1/2-13 FLG HH ES
40	483374	Spring, Deck Lift
41	04001-136	Cap Screw, 3/8-16 x 1.50 HH GR 8
42	431088	Bushing, Deck Lift
43	04001-52	Cap Screw, 1/2-13 x 2.50 HH

SHEET METAL COMPONENTS

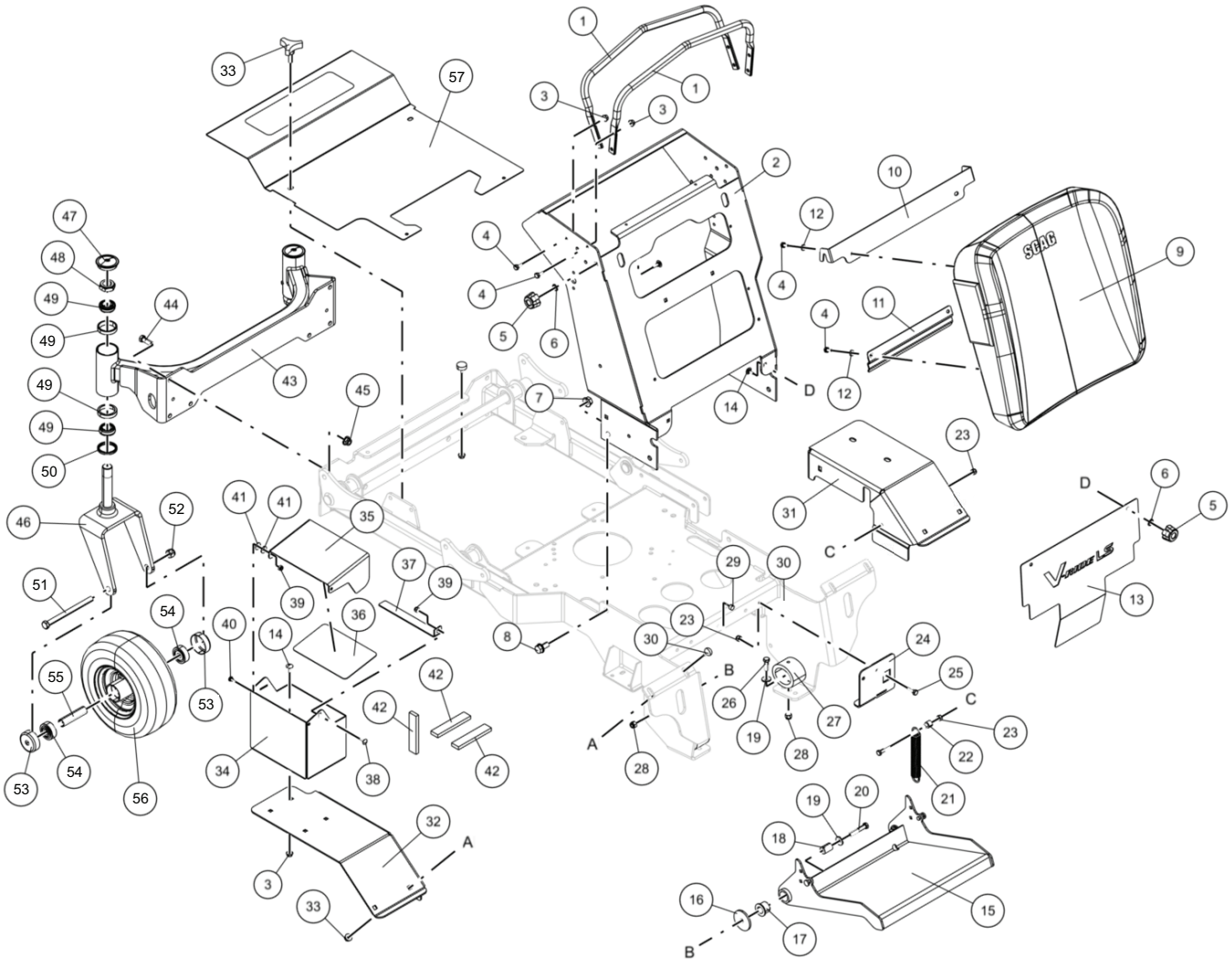

SHEET METAL COMPONENTS

Ref. No.	Part No.	Description
1	427189	Reference Bar
2	452872	Handlebar Weldment
3	04019-03	Nut, 5/16-18 SERR FLG
4	04001-08	Cap Screw, 5/16-18 x .75 HH
5	481885-06	Fluted Knob, 5/16-18
6	04024-03	Nut, Push-On
7	04112-05	Locknut, 1/2-13 Spiral
8	04017-36	Cap Screw, 1/2-13 x 1.00 SERR FLG HH
9	463330	Operator Pad Assy. (Incl. 4, 10, 11, 12)
10	427289	Bracket, Operator Pad
11	427292	Bracket, Operator Pad
12	04030-03	Lock Washer, 5/16 ANSI Helical Spring
13	4201858	Guard, Foot
14	04003-12	Carriage Bolt, 5/16-18 x .75
15	453866	Footplate Weldment
16	04041-38	Flat Washer, 3/8-.406 x 2.25 x .1875
17	486834	Bearing, Pivot
18	43572	Spacer, Footplate
19	04041-07	Flat Washer, 3/8-.391 x .938 x .105
20	04001-46	Cap Screw, 3/8-16 x 2.25 HH
21	48755	Spring, Footplate
22	43602	Spacer, Footplate
23	04021-10	Locknut, 5/16-18 ES
24	4201787	Axle Support (RH)
	4201785	Axle Support (LH)
25	04001-09	Cap Screw, 5/16-18 x 1.00 HH
26	04001-32	Cap Screw, 3/8-16 x 1.25 HH
27	486758	Isolator, Footplate
28	04021-09	Locknut, 3/8-16 ES
29	485846	Plug, Bumper
30	494610	Frame Weldment, SVLS
31	428068	Fender (RH)
32	428067	Fender (LH)
33	481625-01	Knob w/ Stud
34	427316	Battery Box, Lower

Ref. No.	Part No.	Description
35	428066	Battery Box, Upper
36	485692	Battery Cover
37	427318	Battery Box, Latch
38	04003-02	Carriage Bolt, 1/4-20 x .75
39	04021-08	Locknut, 1/4-20 ES
40	04001-01	Cap Screw, 1/4-20 x .75 HH
41	04040-14	Flat Washer, 1/4-.312 x .750 x .065
42	48661	Rubber Pad
43	452870	Caster Support Weldment (Incl. 49)
44	04001-28	Cap Screw, 7/16-14 x 1.25 HH
45	04117-05	Locknut, 7/16-14 FLG HH ES
46	453208	Yoke Weldment
47	484195	Cap, Grease
48	04021-20	Jam Nut, 1-14 ES HH
49	48668	Bearing w/ Race
50	481025	Seal, 2.00 OD x 1.625 Bore
51	04001-80	Cap Screw, 1/2-13 x 6.50 HH
52	04021-07	Locknut, 1/2-13 ES
53	487686	Grass Shield, Caster
54	487685	Bearing, Caster
55	487931	Spanner, Caster
56	487929	Caster Wheel Assy (Incl. 54, 55)
57	463837	Belt Cover
58	481625-01	Knob w/ Stud

STEERING CONTROLS

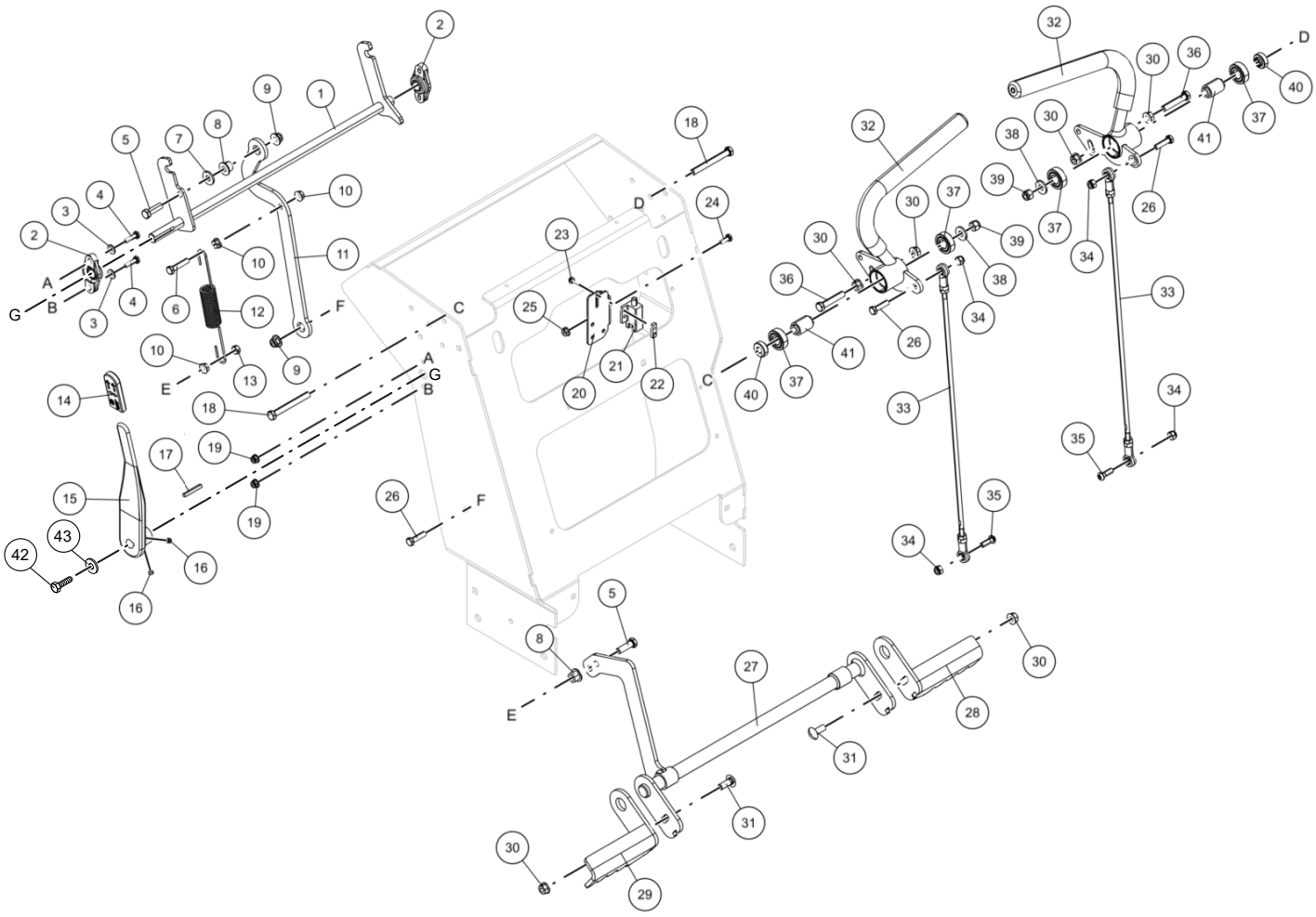

STEERING CONTROLS

Ref. No.	Part No.	Description
1	463392	Lock Weldment, Neutral
2	483504	Bearing, Spherical Flange
3	04040-03	Flat Washer, 1/4-.281 x .625 x .065 Type A
4	04001-14	Cap Screw, 1/4-20 x 1.00 HH
5	04001-32	Cap Screw, 3/8-16 x 1.25 HH
6	04001-11	Cap Screw, 5/16-18 x 1.50 HH
7	04041-07	Flat Washer, 3/8-.391 x .938 x .105
8	48100-30	Bushing, Bronze .376 ID x .627 OD
9	04117-02	Locknut, 3/8-16 FLG HH ES
10	04019-03	Nut, 5/16-18 SERR FLG
11	427538	Link, Brake Engage
12	484038	Spring
13	04021-04	Locknut, 5/16-18 Center Lock
14	486696	Grip, Brake Lever
15	463265	Lever Assy., Brake
16	04012-03	Set Screw, 5/16-18 x .25
17	04063-05	Key, 3/16 x 3/16 x 1.50
18	04001-62	Cap Screw, 3/8-16 x 3.25
19	04117-03	Locknut, 1/4-20 FLG HH ES
20	427269	Bracket, Neutral Switch
21	481545	Switch, Interlock
22	422373	Plate, Threaded
23	04010-12	Screw, #10-32 x .75 HWH
24	04001-01	Cap Screw, 1/4-20 x .75 HH
25	04019-02	Nut, 1/4-20 SERR FLG
26	04001-10	Cap Screw, 5/16-18 x 1.25 HH
27	453139	Shaft, Brake Bellcrank
28	452883	Brake Paddle (RH)
29	452882	Brake Paddle (LH)
30	04019-04	Nut, 3/8-16 SERR FLG
31	04003-23	Carriage Bolt, 3/8-16 x 1.00
32	463852	Handlebar Assy. (LH) (Incl. 37, 41)
	463853	Handlebar Assy. (RH) (Incl. 37, 41)
	484092	Grip, Control Lever

Ref. No.	Part No.	Description
33	485842	Linkage Assy., Steering
	485841	Link, Steering
	484073	Rod End (LH)
	482072	Rod End (RH)
	04020-30	Jam Nut, 5/16-24 (LH)
	04020-31	Jam Nut, 5/16-24 (RH)
34	04021-10	Locknut, 5/16-18 ES
35	04108-02	Cap Screw, 5/16-18 x 1.00 HSH
36	04001-45	Cap Screw, 3/8-16 x 2.00 HH
37	48224	Bearing, Jackshaft
38	04043-04	Flat Washer, 3/8-.391 x .938 x .105 HD
39	04021-09	Locknut, 3/8-16 ES
40	431024	Spacer, Controls
41	43600	Spacer, Bearing
42	04001-09	Cap Screw, 5/16-18 x 1.00 UNC HH
43	04040-15	Flat Washer, 5/16 - .375 x .875 x .083

FUEL SYSTEM AND ENGINE EXHAUST

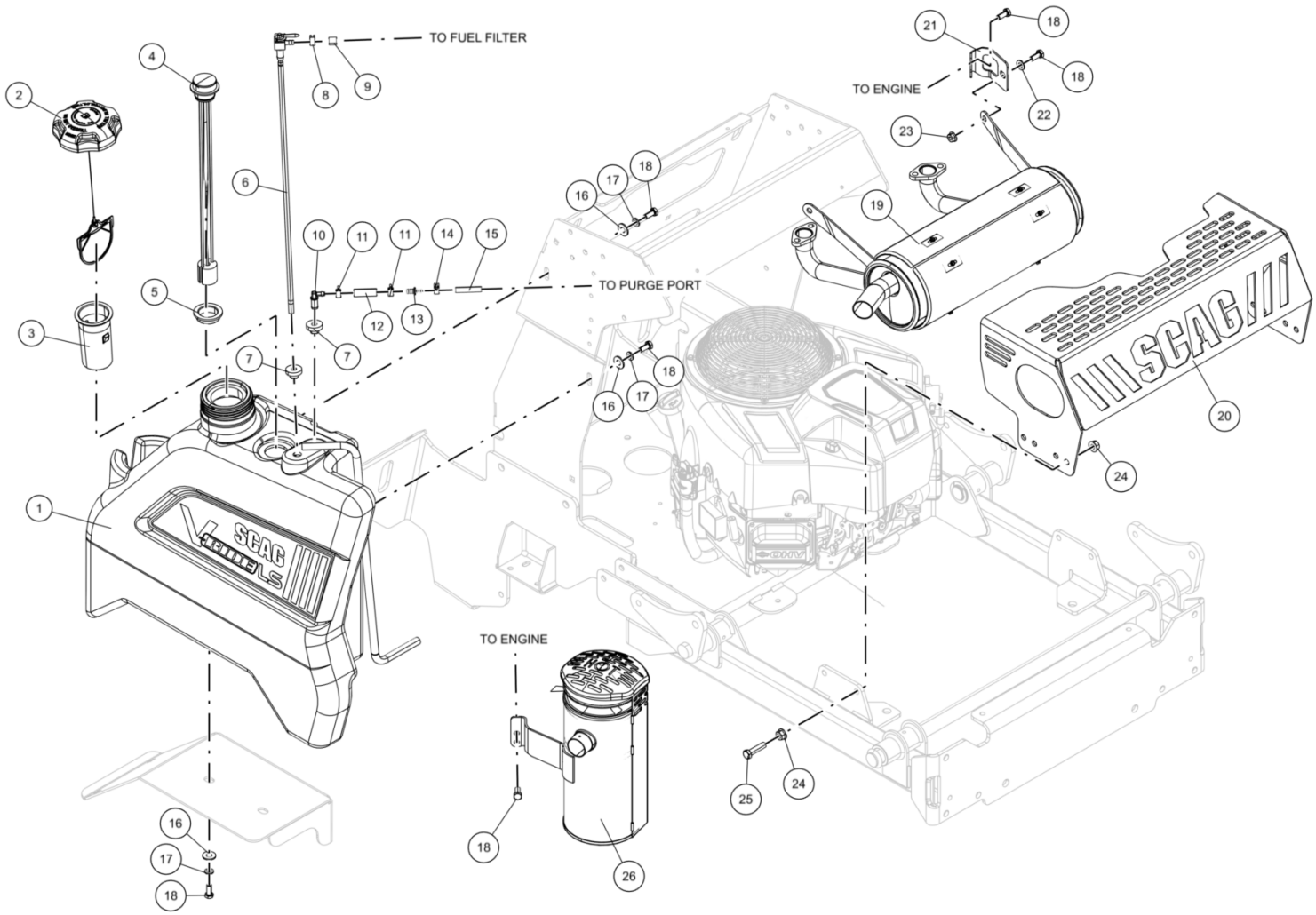

FUEL SYSTEM AND ENGINE EXHAUST

Ref. No.	Part No.	Description
1	463836	Fuel Tank Assy. (Incl. 4, 5, 6, 7, 10)
2	484286	Fuel Cap w/ Tether
3	484279-01	Tube, Fuel Inlet
4	485914	Fuel Gauge Assy. (Incl. 5)
5	484242	Seal, Fuel Gauge
6	485913	Valve, Fuel Shutoff
7	482571	Bushing
8	48059-01	Clamp, Fuel Hose 1/4" ID
9	483617	Hose, Fuel Non Perm (Order By Inch)
10	486852	Remote Vent
11	48059-02	Clamp, Fuel Hose 7/32" ID
12	484347	Hose, Vapor Return 1/4"
13	484343-01	Mender, 1/4" x 3/16" w/ .02 Hole
14	48059-05	Clamp, Vapor Hose
15	484345	Hose, Vapor Recovery 3/16" (Order By Inch)
16	04040-15	Flat Washer, 5/16-.375 x .875 x .083
17	04030-03	Lock Washer, 5/16 Helical Spring
18	04001-08	Cap Screw, 5/16-18 x .75 HH
19	487480	Muffler, B&S Vanguard CX
	488487	Muffler, Kawasaki 18FSE
	486815	Muffler, Kawasaki 22FSE
20	429380	Heat Shield, Muffler
21	428449	Mounting Bracket, Muffler
22	04040-04	Flat Washer, 5/16-.344 x .688 x .065
23	04019-03	Nut, 5/16-18 SERR FLG
24	04019-04	Nut, 3/8-16 SERR FLG
25	04001-136	Cap Screw, 3/8-16 x 1.50 HH GR 8
26	484620	Muffler, Kawasaki 18FSE
	485571	Muffler, Kawasaki 22FSE
*	485572	Exhaust Manifold, 22FSE

* Item not shown.

DRIVE SYSTEM COMPONENTS

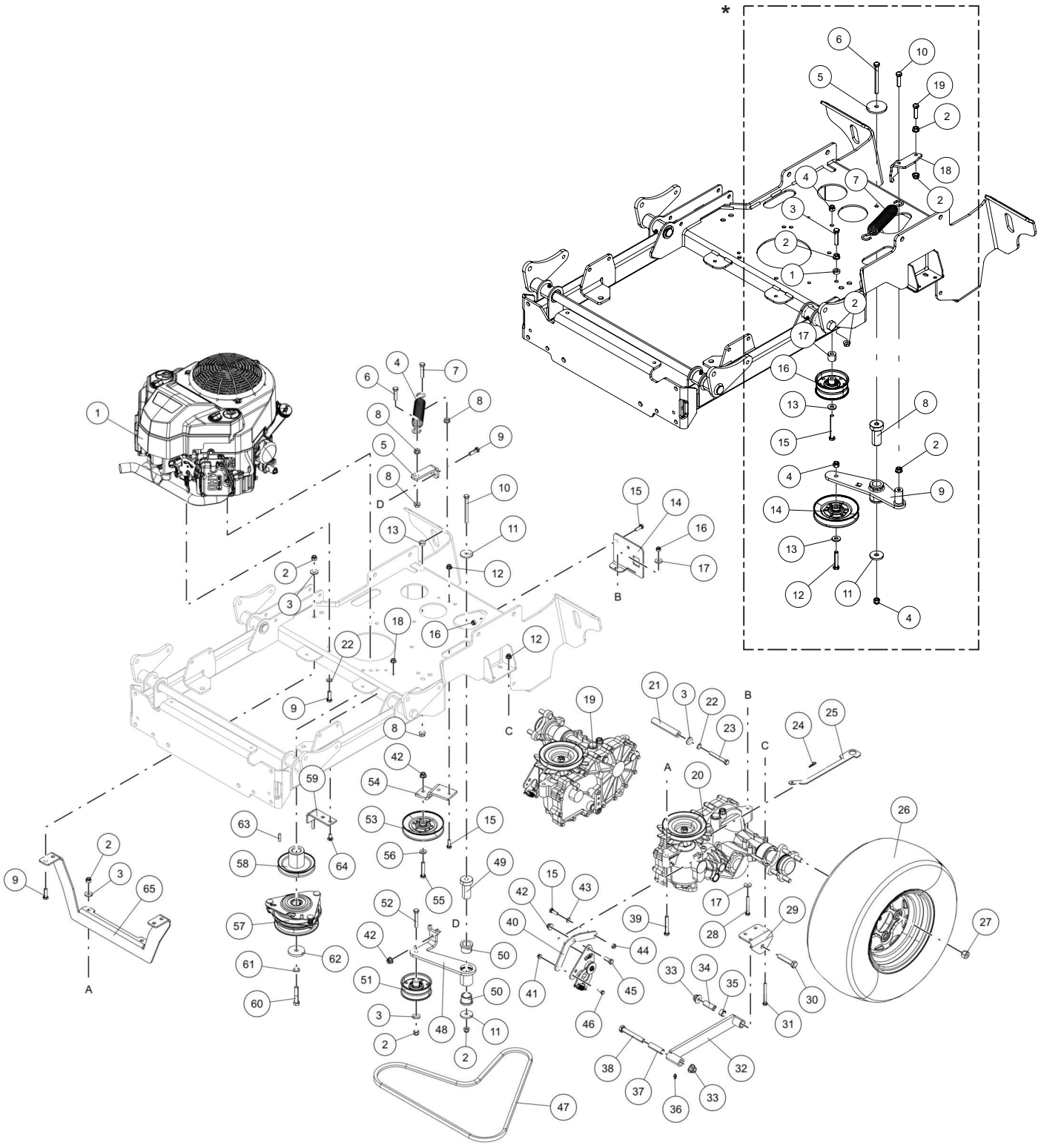

* (206D00001 – 206D00275, 215D00001 – 215D00125)

DRIVE SYSTEM COMPONENTS

Ref. No.	Part No.	Description
1	*	Engine, B&S Vanguard 20CX (40T8770026G1)
	*	Engine, B&S Vanguard 25CX (44T9770043G1)
	*	Engine, Kawasaki 18FSE (FS600V-T12-R)
	*	Engine, Kawasaki 22FSE (FS651V-DS10)
2	04021-09	Locknut, 3/8-16 ES
3	04043-04	Flat Washer, 3/8-.391 x .938 x .105 HD
4	483112	Spring
5	4202030	Bracket, Spring Anchor
6	04001-136	Cap Screw, 3/8-16 x 1.50 HH GR 8
7	04001-135	Cap Screw, 3/8-16 x 1.75 HH
8	04019-04	Nut, 3/8-16 SERR FLG
9	04001-32	Cap Screw, 3/8-16 x 1.25 HH
10	04001-51	Cap Screw, 3/8-16 x 3.75 HH
11	04041-11	Flat Washer, 3/8-.406 x 1.50 x .1793
12	04117-01	Locknut, 5/16-18 FLG HH ES
13	43063	Spacer, Clutch Control
14	4201785	Axle Support (LH)
	4201787	Axle Support (RH)
15	04001-09	Cap Screw, 5/16-18 x 1.00 HH
16	04021-10	Locknut, 5/16-18 ES
17	04040-15	Flat Washer, 5/16-.375 x .875 x .083
18	04019-03	Nut, 5/16-18 SERR FLG
19	488979	Transaxle Assy., ZT-3100 (RH) (ZL-GCEF-9D7B-26TX)
20	488978	Transaxle Assy., ZT-3100 (LH) (ZL-KCEF-9D7C-36TX)
21	431439	Spacer, Axle
22	04030-04	Lock Washer, 3/8 Helical Spring
23	04001-22	Cap Screw, 3/8-16 x 2.75 HH
24	04062-02	Cotter Pin
25	428623	Lever, Dump Valve
26	485920	Wheel Assy., 20 x 8.00-10
27	04028-02	Wheel Nut
28	04001-53	Cap Screw, 5/16-18 x 2.50 HH

Ref. No.	Part No.	Description
29	424489	Bracket, Pusharm Link
30	04001-52	Cap Screw, 1/2-13 x 2.50 HH
31	04001-49	Cap Screw, 5/16-18 x 3.00
32	463844	Pusharm Assy. (Incl. 35, 36)
33	04117-04	Locknut, 1/2-13 FLG HH ES
34	43986	Spacer, Pusharm
35	483453-18	Bearing, Plastic
36	48114-04	Grease Fitting
37	43985	Spacer, Pusharm
38	04001-145	Cap Screw, 1/2-13 x 3.50 HH
39	04001-31	Cap Screw, 3/8-16 x 2.50 HH
40	4201855	Arm, Pump Control
41	04117-03	Locknut, 1/4-20 FLG HH ES
42	04117-02	Locknut, 3/8-16 FLG HH ES
43	04030-03	Lock Washer, 5/16 Helical Spring
44	04021-04	Locknut, 5/16-18 Center Lock
45	04001-19	Cap Screw, 3/8-16 x 1.00 HH
46	04001-01	Cap Screw, 1/4-20 x .75 HH
47	486649	Belt, Pump Drive
48	463900	Idler Arm Assy. w/ Bushings (Incl. 50)
49	43708	Pivot, Idler
50	483453-03	Bearing, Plastic
51	486045	Idler Pulley, 3.50
52	04001-46	Cap Screw, 3/8-16 x 2.25 HH
53	48181	Idler Pulley
54	4202029	Mounting Bracket, Pulley
55	04001-45	Cap Screw, 3/8-16 x 2.00 HH
56	04043-07	Flat Washer, 3/8-.391 x .81 x .086 HD
57	462715	Electric Clutch Assy.
58	488976	Pulley, 4.50 Diameter
59	463668	Anti-Rotation Kit
60	04102-03	Cap Screw, 7/16-20 x 2.25 HH
61	04030-05	Lock Washer, 7/16 Helical Spring
62	04043-12	Flat Washer, 7/16-.469 x 2.00 x .25 HD
63	04063-20	Key, 1/4 x 1/4 x 1.00
64	04003-12	Carriage Bolt, 5/16-18 x .75
65	4201755	Bracket, Axle Mount

* Not available through Scag Power Equipment.

DRIVE SYSTEM COMPONENTS

(206D00001 – 206D00275, 215D00001 – 215D00125)

Ref. No.	Part No.	Description
1	43063	Spacer, Clutch Control
2	04019-04	Nut, 3/8-16 SERR FLG
3	04001-135	Cap Screw, 3/8-16 x 1.75 HH
4	04021-09	Locknut, 3/8-16 ES
5	04041-38	Flat Washer, 3/8-.406 x 2.25 x .1875
6	04001-51	Cap Screw, 3/8-16 x 3.75 HH
7	483112	Spring
8	43708	Pivot, Idler
9	463850	Idler Arm Assy. w/ Bushings
10	04001-136	Cap Screw, 3/8-16 x 1.50 HH GR 8

Ref. No.	Part No.	Description
11	04043-11	Flat Washer, 3/8-.438 x 1.50 x .1793 HD
12	04001-45	Cap Screw, 3/8-16 x 2.00 HH
13	04043-04	Flat Washer, 3/8-.391 x .938 x .105 HD
14	48181	Idler Pulley
15	04001-54	Cap Screw, 3/8-16 x 3.00 HH
16	486045	Idler Pulley, 3.50
17	43123	Spacer, Cam Pivot
18	4202024	Idler Arm Extension Bracket
19	04017-27	Cap Screw, 3/8-16 SERR FLG HH

* Item not shown.

CONTROL PANEL AND ELECTRICAL SYSTEM

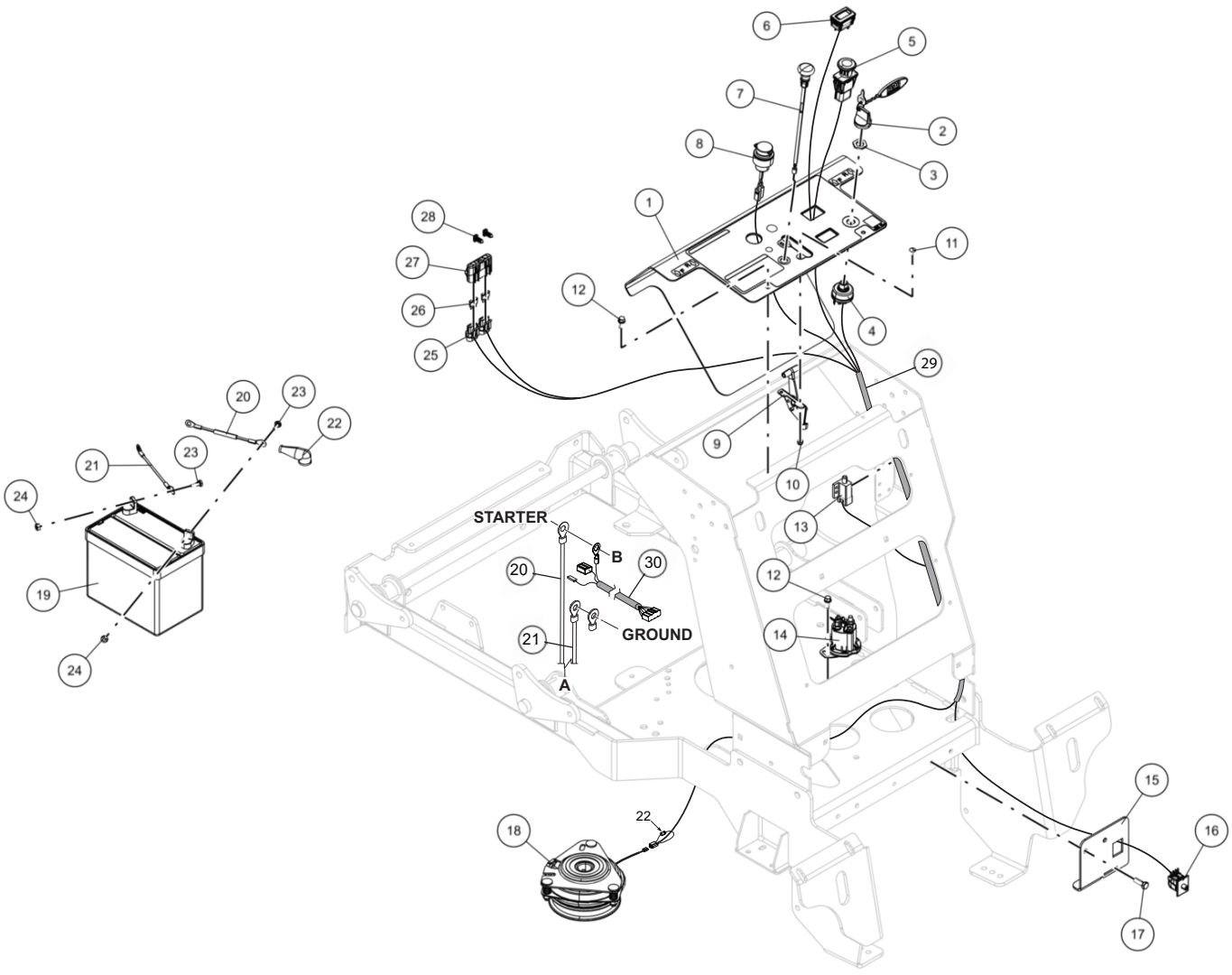

CONTROL PANEL AND ELECTRICAL SYSTEM

Ref. No.	Part No.	Description
1	463895	Instrument Panel w/ Decal
2	462069	Fob Assy. w/ Key
3	48017-04	Nut, 5/8-32 Special
4	48798	Starter Switch
5	485833	PTO Switch, Sealed
6	484565	Hour Meter, Inductive
7	483976	Choke Control
8	485568	Power Plug, 12V
9	483975	Throttle Control
10	04021-26	Locknut, #10-24
11	04003-43	Carriage Bolt, #10-24 x .50
12	04011-14	Screw, 1/4-20 x .75 TT
13	481545	Switch, Interlock
14	483278	Solenoid
15	4201785	Axle Support (LH)
	4201787	Axle Support (RH)
16	484497	Switch, Double Pole Plunger
17	04001-09	Cap Screw, 5/16-18 x 1.00
18	462715	Electric Clutch Assy.
19	*	Battery, 12V 350 CCA
20	48029-30	Battery Cable, Red 44"
21	48029-24	Battery Cable, Black 39"
22	48126	Rubber Boot
23	04001-01	Cap Screw, 1/4-20 x .75 HH
24	04020-02	Nut, 1/4-20 UNC
25	483629	Fuse Holder
26	48298	Fuse, 20 Amp
27	483571	Fuse Cover, Double
28	482588	Clip, Wire
29	486768	Wire Harness
30	485679	Harness Adapter, Kawasaki FSE
	487609	Harness Adapter, Briggs & Stratton CX

* Not available through Scag Power Equipment.

ZT-3100 HYDRAULIC TRANSAXLE ASSEMBLY

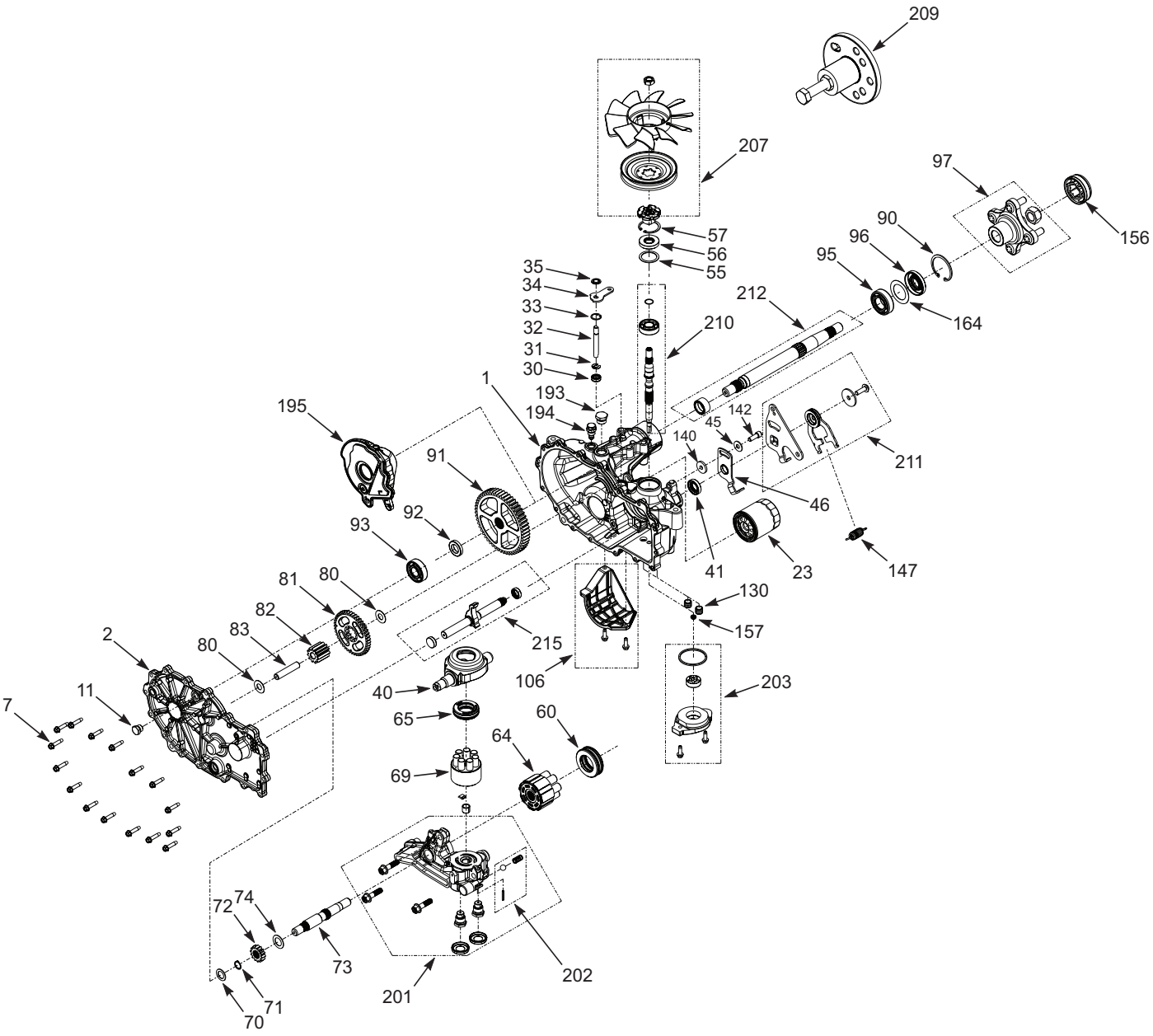

ZT-3100 HYDRAULIC TRANSAXLE ASSEMBLY

Ref. No.	Part No.	Description
1	HG73073	Kit, Housing (LH)
	HG73069	Kit, Housing (RH)
2	HG73096	Kit, Side Cover (LH)
	HG73095	Kit, Side Cover (RH)
7	HG53246	Screw, Hex Washer
11	HG54730	Plug, 9/16-18
23	HG52114	Oil Filter
30	HG55232	Seal, Lip .375 x .75 x .25
31	HG51628	Ring, Retaining External .375
32	HG52136	Rod, Bypass .375 x 2.88
33	HG51627	Ring, Retaining .750, Internal
34	HG52370	Arm, Bypass
35	HG51630	Ring, Retaining .375, External
40	HG51048	Swashplate, Trunnion
41	HG51140	Seal, Lip 18 x 32 x 7
45	HG44130	Washer, .34 x .88 x .06 Flat
55	HG50951	Washer, 1.23 x 1.57 x .04 Flat
56	HG55486	Seal, Lip 17 x 40 x 7 HNBR
57	HG50329	Ring, Retaining Internal
60	HG51462	Bearing, Thrust 35 x 62 x 18
64	HG72882	Kit, 16cc Cylinder Block Assy.
65	HG50551	Bearing, Thrust 30 x 52 x 13
69	HG70723	Kit, Block 7 Piston
70	HG44371	Washer, .63 x 1.00 x .05 Flat
71	HG44145	Retaining Ring, Motor Shaft
72	HG52341	Gear, 14T (Steel)
73	HG52150	Shaft, Motor
74	HG51069	Washer, .71 x 1.16 x .04 Flat
80	HG50132	Washer, .51 x 1.00 x .03 Flat
81	HG52110	Gear, 45T
82	HG52586	Gear, 11T (Steel)
83	HG55710	Pin, Jackshaft
90	HG50859	Ring, Retaining 2.25 Internal
91	HG52108	Gear, 54T
92	HG53336	Spacer, .756 x 1.320 x .257
93	HG72749	Kit, Bearing
95	HG53656	Bearing, 25.4 x 52 x 15 Ball
96	HG56415	Seal, .97 x 2.06 x .40 Lip TC4

Ref. No.	Part No.	Description
97	HG71405	Kit, Hub (4 Bolt)
106	HG71854	Kit, Filter Guard (LH)
	HG73041	Kit, Filter Guard (RH)
130	HG54501	Tube, Charge Triple O-Ring
140	HG54315	Spacer, .320 ID x 1.005 OD x .1495 THK
141	HG51946	Arm, Return (LH)
	HG51945	Arm, Return (RH)
142	HG51616	Cap Screw, 5/16-24 x 7/8 SH
147	HG52401	Spring, Extension
156	HG53088	Cap, Axle
157	HG72291	Kit, Gerotor Seal
164	HG53514	Washer, 1.355 x 2.035 x .021 Flat
193	HG54974	Plug, 3/4-16
194	HG55789	Breather Fitting Assy., 9/16-18
195	HG55072	Expansion Tank Assy. (LH)
	HG55071	Expansion Tank Assy. (RH)
201	HG71566	Kit, Center Selection (LH)
	HG71565	Kit, Center Selection (RH)
202	HG71436	Kit, Charge Relief
203	HG72274	Kit, Charge
207	HG72980	Kit, Fan/Pulley
209	HG72320	Kit, Hub Puller
210	HG73047	Kit, Input Shaft
211	HG71592	Kit, RTN Assy. (LH)
	HG71588	Kit, RTN Assy. (RH)
212	HG71569	Kit, Shaft Axle
215	HG73121	Kit, Inboard (LH)
	HG73120	Kit, Inboard (RH)
*	HG73629	Seal Kit (Incl. 30, 31, 33, 35, 41, 56, 57, 71, 157)

* Item not shown.

REPLACEMENT DECALS



1



2



3



4

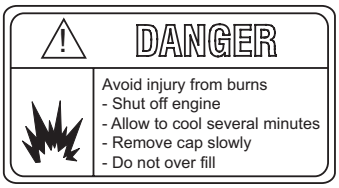

5

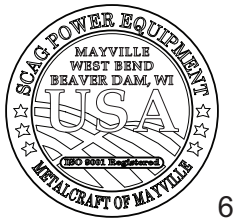

6

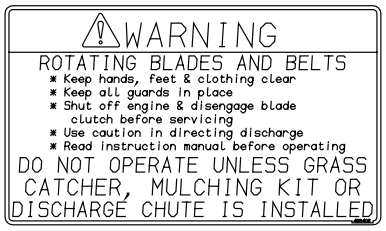

7

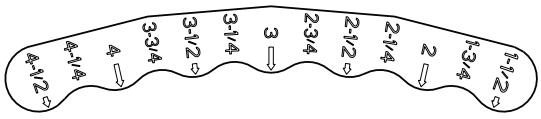

8

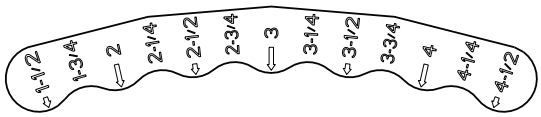

9



10

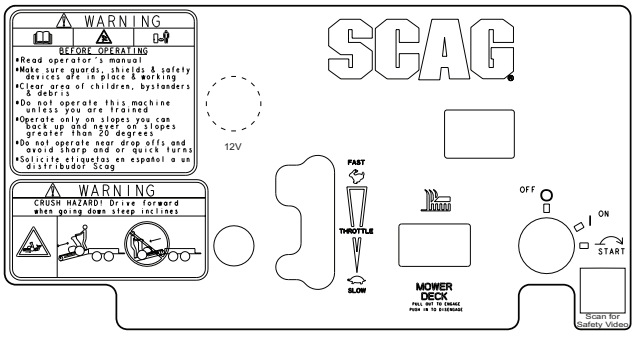

11



12

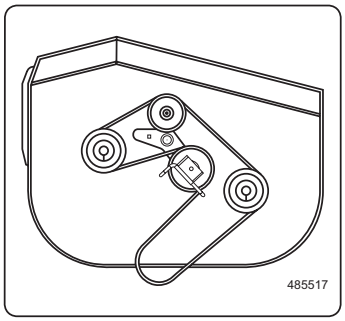

13



14

REPLACEMENT DECALS

Ref. No.	Part No.	Description
1	487212	Decal, Belt Cover Warning
2	483405	Decal, Discharge Chute Warning
3	483505	Decal, Spinning Blades Warning
4	486797	Decal, 36H
	486896	Decal, 42H
	486798	Decal, 48H
	486799	Decal, 52H
5	485667	Decal, Fuel Safety Warning
6	485403	Decal, Metalcraft - USA
7	483406	Decal, Blades and Belts Warning
8	485798	Decal, Deck Height (Outer)
9	485826	Decal, Deck Height (Inner)
10	484453	Decal, SCAG Heavy-Duty Commercial
11	489030	Decal, Instrument Panel
12	482100	Decal, Travel Controls
13	485517	Decal, Belt Routing (36H)
	485518	Decal, Belt Routing (42H, 48H, 52H)
14	488991	Decal, SCAG V-Ride LS (Fuel Tank)

ELECTRICAL SCHEMATICS (HARNESS)

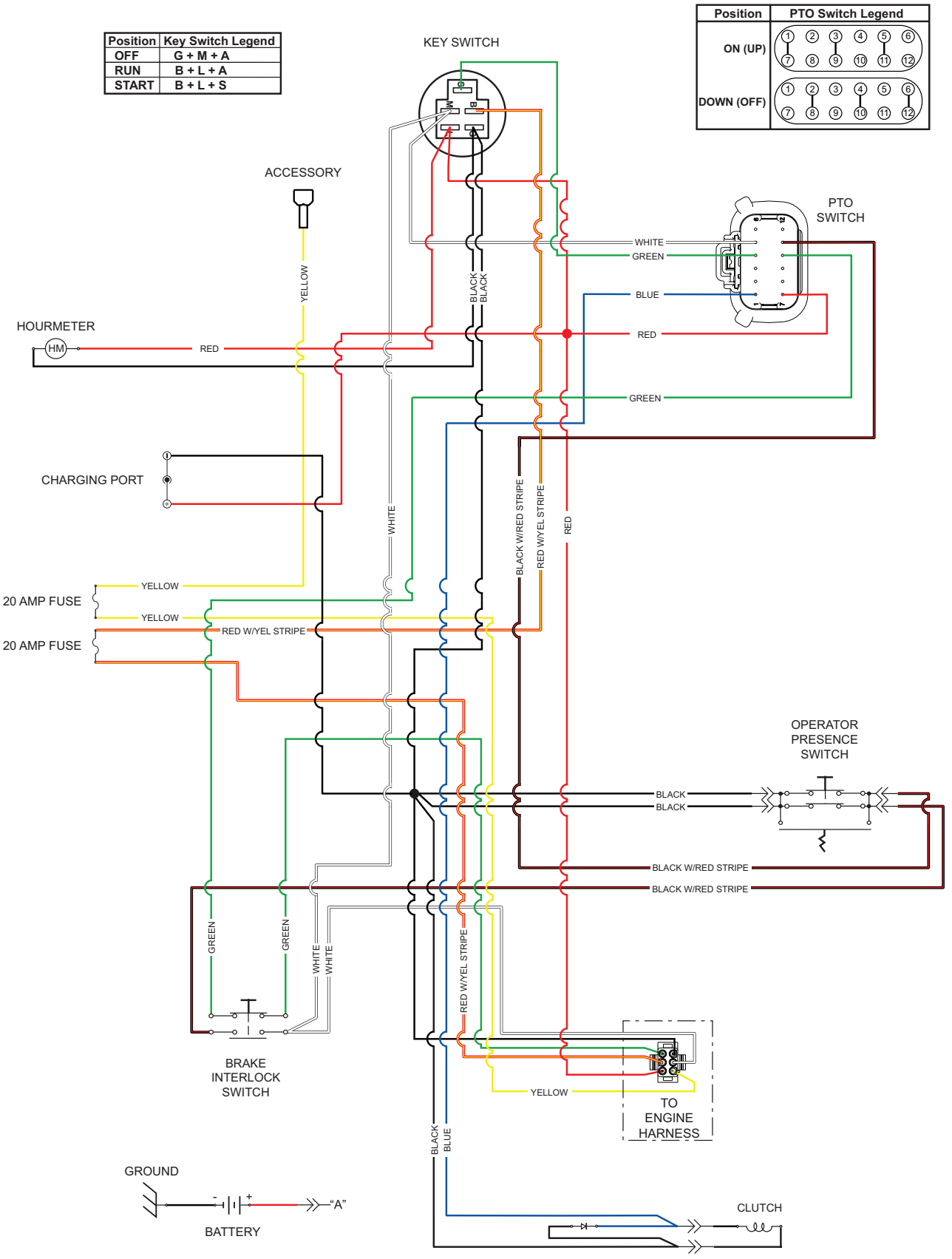

ELECTRICAL SCHEMATICS (ADAPTERS)

KAWASAKI FSE ENGINE ADAPTER WIRE HARNESS

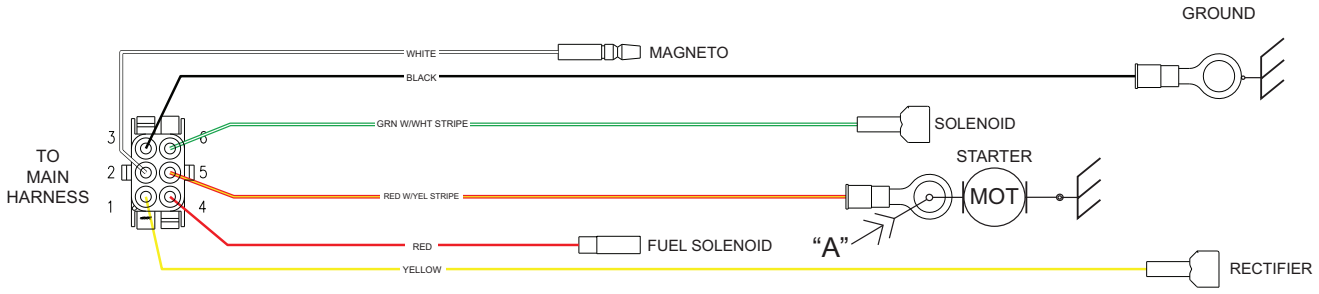

BRIGGS AND STRATTON CX ENGINE ADAPTER WIRE HARNESS

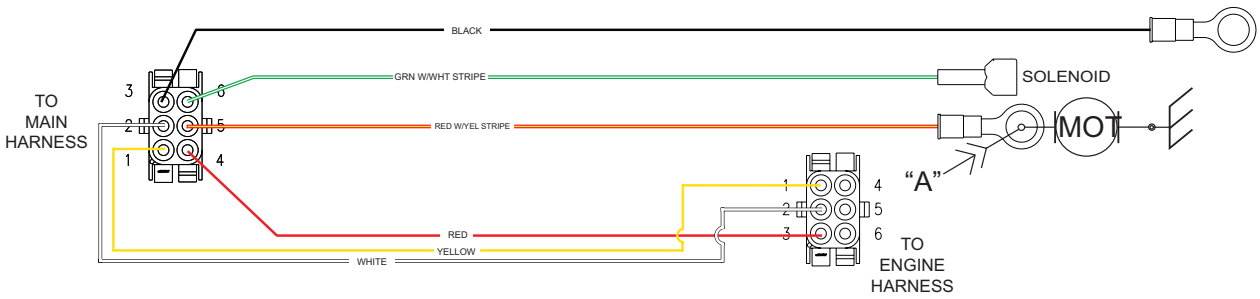

NOTES

PAGE LEFT INTENTIONALLY BLANK

LIMITED WARRANTY - SVLS

Any part of the Scag commercial mower manufactured by Scag Power Equipment and found, in the reasonable judgment of Scag, to be defective in materials or workmanship, will be repaired or replaced by an Authorized Scag Service Dealer without charge for parts and labor during the periods specified below. This warranty is limited to the original purchaser provided the product was purchased from an Authorized Scag Power Equipment Dealer and is not transferable. Proof of purchase will be required by the dealer to substantiate any warranty claims. All warranty work must be performed by an Authorized Scag Service Dealer.

This warranty is limited to the following specified periods from the date of the original retail purchase for defects in materials or workmanship:

- Wear items including drive belts, blades and tires are warranted for ninety (90) days.
- Batteries are covered for ninety (90) days.
- Frame and structural components including oil reservoir and oil coolers are warranted for two (2) years (parts and labor) for commercial use or three (3) years / 500 hours (whichever comes first) (parts and labor) for non-commercial use.
- Cutter decks are warranted against cracking for a period of three (3) years. (parts and labor 1st and 2nd year; parts only 3rd year.) The repair or replacement of the cutter deck will be at the option of Scag Power Equipment. We reserve the right to request components for evaluation. This warranty does not cover any mower that has been subject to misuse, neglect, negligence, accident, or that has been operated in any way contrary to the operating instructions as specified in the Operator's Manual.
- Engines and electric starters are covered by the engine manufacturer's warranty period.
- Major drive system components are warranted for two (2) years (parts and labor) for commercial use or three (3) year / 500 hour (whichever comes first) (parts and labor) for non-commercial use by Scag Power Equipment. (commercial and non-commercial warranty excludes fittings, hoses, drive belts). The repair or replacement of the hydraulic axles will be at the option of Scag Power Equipment. This warranty does not cover any mower that has been subject to misuse, neglect, negligence, or accident, or that has been operated in any way contrary to the operating instructions as specified in the Operator's Manual.
- Electric clutches have a Limited Warranty for two (2) years (parts and labor) for commercial use or three (3) year / 500 hours (whichever comes first) (parts and labor) for non-commercial use.
- Spindle assemblies have a Limited Warranty for two (2) years (parts and labor 1st and 2nd year) for commercial use or three (3) years / 500 hours (whichever comes first) (First and second year of the warranty covers parts and labor. The third year covers parts only) for non-commercial use.
- Any Scag product used for rental purposes is covered by a 90 day warranty.

The Scag mower, including any defective part, must be returned to an Authorized Scag Service Dealer within the warranty period. The expense of delivering the mower to the dealer for warranty work and the expense of returning it to the owner after repair will be paid for by the owner. Scag's responsibility is limited to making the required repairs and no claim of breach of warranty shall be cause for cancellation or rescission of the contract of sale of any Scag mower. "Non-Commercial" use is defined as a single property owner, where the single property is the residence of the owner of the mower. If the mower is cutting more than the owners single property, it is deemed commercial use and the "non-commercial" warranty does not apply. Scag Power Equipment reserves the right to deny and / or void the non-commercial warranty if it believes it to be in commercial use.

This warranty does not cover any mower that has been subject to misuse, neglect, negligence, accident, or that has been operated in any way contrary to the operating instructions as specified in the Operator's Manual. The warranty does not apply to any damage to the mower that is the result of improper maintenance, or to any mower or parts that have not been assembled or installed as specified in the Operator's Manual. The warranty does not cover any mower that has been altered or modified, changing performance or durability. In addition, the warranty does not extend to repairs made necessary by normal wear, or by the use of parts or accessories which, in the reasonable judgment of Scag, are either incompatible with the Scag mower or adversely affect its operation, performance, or durability.

Scag Power Equipment reserves the right to change or improve the design of any mower without assuming any obligation to modify any mower previously manufactured. All other implied warranties are limited in duration to the two (2) year for commercial use, three (3) years / 500 hour for non-commercial use or ninety (90) days for mowers used for rental purpose. Accordingly, any such implied warranties including merchantability, fitness for a particular purpose, or otherwise are disclaimed in their entirety after the expiration of the appropriate two (2) year for commercial use, three (3) years / 500 hour for non-commercial use or ninety day warranty period. Scag's obligation under this warranty is strictly and exclusively limited to the repair or replacement of defective parts and Scag does not assume or authorize anyone to assume for them any other obligation. Some states do not allow limitations on how long an implied warranty lasts, so the above limitation may not apply to you.

Scag assumes no responsibility for incidental, consequential or other damages including, but not limited to: expense for fuel; expense of delivering the mower to an Authorized Scag Service Dealer and expense of returning the mower to the owner; mechanic's travel time; telephone or communication charges; rental of a like product during the time warranty repairs are being performed; travel, loss, or damage to personal property; loss of revenue; loss of use of the mower; loss of time; inconvenience. Some states do not allow the exclusion or limitation of incidental or consequential damages, so the above limitation or exclusion may not apply to you. This warranty gives you specific legal rights, and you may also have other rights which vary from state to state.

For additional questions regarding the warranty terms and conditions, contact Scag Power Equipment online at:

https://www.scag.com/company/contact-us/



Scag Power Equipment Headquarters
1000 Metalcraft Drive
Mayville, Wisconsin 53050
1.920.644.8100

Mailing Information
PO Box 152
Mayville, Wisconsin 53050

© 2027
Scag Power Equipment
Division of Metalcraft of Mayville, Inc.