SCAG POWER EQUIPMENT

ILLUSTRATED PARTS MANUAL

SWZ
Walk-Behind



© 2027
Scag Power Equipment
Division of Metalcraft of Mayville, Inc.

PART NO. 06440
PRINTED 10/2026
PRINTED IN USA

Congratulations on owning a Scag mower! This manual contains the illustrated parts list for your machine. Reading this manual can provide you with assistance in locating and identifying components during maintenance and repair procedures. Please read all the information enclosed in this manual before attempting to maintain or repair your machine.

The QR code on the front cover of this manual can be scanned with your mobile device to access manuals, parts lists, and other product information on the official Scag website.

This manual covers the illustrated parts list for:		
SWZ-36A-14FS	**with a serial number of**	**040D00001 to 040D99999**
SWZ-48V-15FSE	**with a serial number of**	**041D00001 to 041D99999**
SWZ-52V-18FSE	**with a serial number of**	**042D00001 to 042D99999**
SWZ-14FSE-16	**with a serial number of**	**043D00001 to 043D99999**
SWZ-15SE-16	**with a serial number of**	**044D00001 to 044D99999**
SWZL-52V-22FSE	**with a serial number of**	**045D00001 to 045D99999**
SWZL-61V-22FSE	**with a serial number of**	**046D00001 to 046D99999**
Always use the entire serial number listed on the serial number tag when referring to this product.		

Model Number:	Serial Number:

Please use the table provided above to record the model number and serial number located on your machine for future reference.

⚠ WARNING

YOUR MACHINE IS ONLY AS SAFE AS THE OPERATOR. HAZARD CONTROL AND ACCIDENT PREVENTION ARE DEPENDENT UPON THE AWARENESS, CONCERN, PRUDENCE, AND PROPER TRAINING OF THE PERSONNEL INVOLVED IN THE OPERATION, TRANSPORT, MAINTENANCE, AND STORAGE OF THE EQUIPMENT.

- **Carefully read and understand the safety and operating instructions described in this manual. Always keep a copy of this manual with the machine.**
- **Ensure every operator is properly trained and thoroughly familiar with all controls and procedures before operating the machine.**
- **Always follow OSHA-approved operating procedures when operating the machine.**
- **Keep all shields, guards, and plates in place when operating the machine. Do not remove the grass discharge chute while the machine is running.**
- **Stay two machine widths away from slopes, drop-offs, ditches, embankments, retaining walls, water, or other obstacles.**
- **Do not mow on wet grass. Wet grass reduces traction and steering control.**
- **Keep hands, feet, and clothing away from moving parts at all times.**
- **Do not carry passengers on the machine.**
- **Do not operate the machine when children or bystanders are present.**
- **If a mechanism becomes clogged during operation, stop the engine before cleaning.**
- **Before performing any maintenance or service, stop the machine and remove the ignition key.**

⚠ WARNING

CALIFORNIA PROPOSITION 65

The engine exhaust produced by this machine contains chemicals known to the State of California to cause cancer, birth defects, or other reproductive harm.

Battery posts, terminals, and related accessories for this machine contain lead and lead compounds, chemicals known to the State of California to cause cancer, birth defects, or other reproductive harm. Wash hands after handling components.

The use of this machine may expose the operator to chemicals known to the State of California to cause cancer, birth defects, or other reproductive harm.

NOTES

PAGE LEFT INTENTIONALLY BLANK

Table of Contents

SECTION 1 - ILLUSTRATED PARTS LIST 1

SCAG APPROVED ATTACHMENTS AND ACCESSORIES. 1
CASTER ASSEMBLY 3
36A CUTTER DECK 5
48V & 52V CUTTER DECKS 7
61V CUTTER DECK 9
ENGINE DECK - MANUAL START 11
ENGINE DECK - ELECTRIC START 13
DRIVE AND BRAKE COMPONENTS 15
HANDLE ASSEMBLY - RECOIL START 17
HANDLE ASSEMBLY - ELECTRIC START 19
SWZ FUEL SYSTEM 21
HYDRAULIC ASSEMBLY 23
HYDRAULIC PUMP ASSEMBLY 25
WIRE HARNESSES 27
SWZ ELECTRICAL SCHEMATIC - RECOIL START 28
SWZ ELECTRICAL SCHEMATIC - ELECTRIC START 29
REPLACEMENT DECALS 30

LIMITED WARRANTY - COMMERCIAL EQUIPMENT ..... INSIDE BACK COVER

NOTES

PAGE LEFT INTENTIONALLY BLANK

ILLUSTRATED PARTS LIST

8.1 SCAG APPROVED ATTACHMENTS AND ACCESSORIES.

Attachments and accessories manufactured by companies other than Scag Power Equipment are not approved for use on this machine.

Scag approved attachments and accessories:

Grass Catchers	P/N
GC-F4 (fabric grass catcher)	926Z

Mulching Accessories	P/N
Mulch Plate (36)	927U
Mulch Plate (48)	927V
Mulch Plate (52)	927W
Mulch Plate (61)	927X
Hurricane Mulch Kit (36)	927M
Hurricane Plus Mulch Kit (48)	927E
Hurricane Plus Mulch Kit (52)	927P
Hurricane Plus Mulch Kit (61)	927Q

Miscellaneous	P/N
Blade Buddy	9212
Chrome Wheel Cover (8")	920H
Turbo Baffle (48/52)	424677
Turbo Baffle (61)	424209

Scag Premium Lubricants	P/N
Chassis Grease	486257
Spindle Grease	486258
Hydraulic System Oil (1 gal)	486254
Hydraulic System Oil (1 qt)	486255

CASTER ASSEMBLY

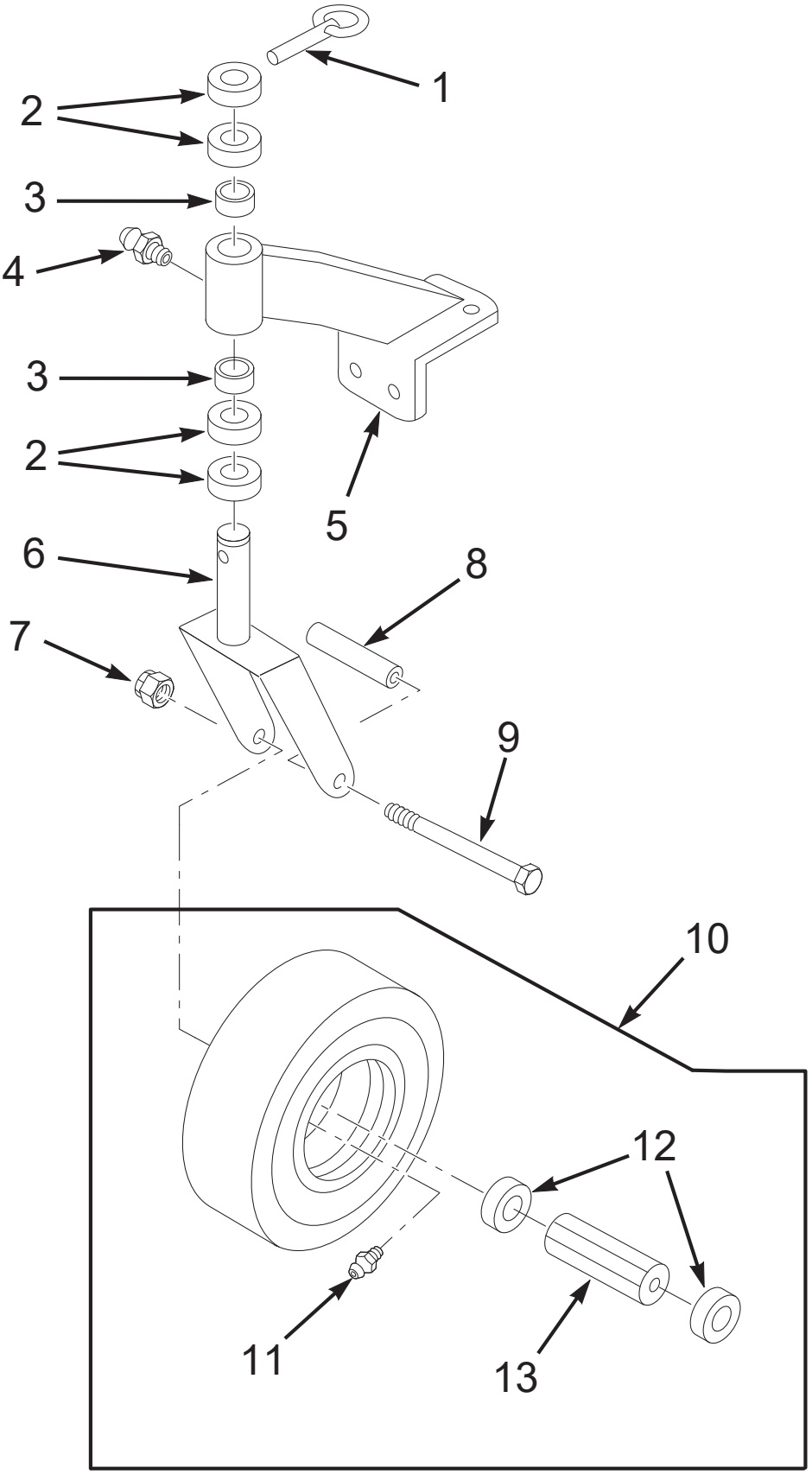

CASTER ASSEMBLY

Ref. No.	Part No.	Description
1	04066-01	Quick Pin
2	43037-01	Spacer, Spacer Yoke, 1/2" Long
3	48100-01	Bronze Bearing
4	48114-04	Greasing Fitting
5	46082	Support Assembly (Incl. #3 & #4)
6	45006	Caster Yoke
7	04021-07	Nut, Elastic Stop 1/2-13
8	43022	Sleeve, Caster Wheel Bearing
9	04001-37	Bolt, Hex Head 1/2-13 x 5-1/2"
10	9275	Flat-Free Tire Assy. (Incl. #11, #12, #13)
11	48114-03	Grease Fitting, 45 Degree 1/4-28
12	481770	Retainer, Caster Wheel Bearing
13	481769	Roller Bearing, Caster Wheel

36A CUTTER DECK

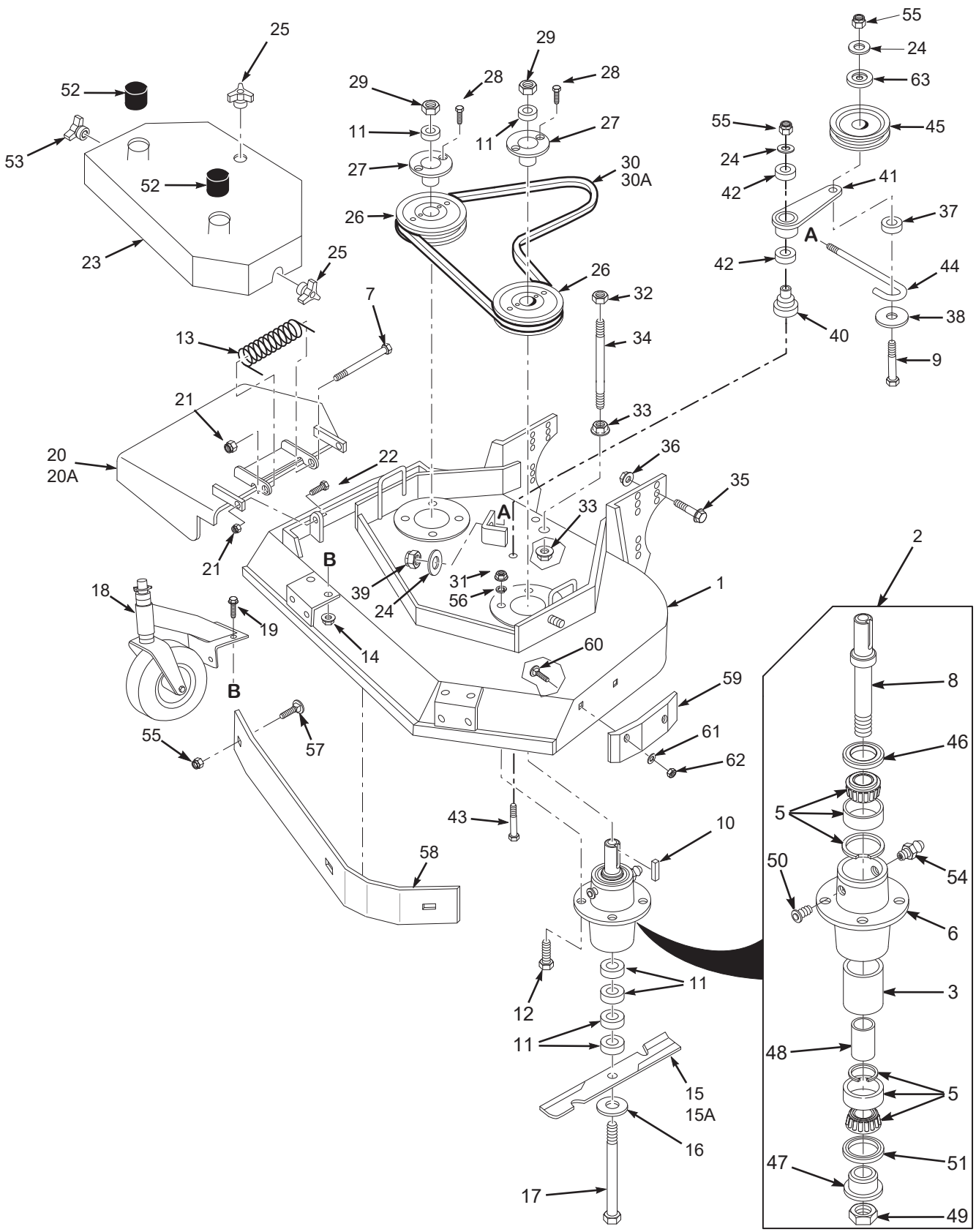

36A CUTTER DECK

Ref. No.	Part No.	Description	36
1	461848	Cutter Deck w/Decals	x
2	461663	Cutter Spindle Assembly	x
3	43312	Spacer, Outside	x
5	481022	Bearing, Tapered	x
6	43644	Spindle Housing	x
7	04001-154	Bolt, 5/16-18 x 4-3/4"	x
8	43589	Spindle Shaft	x
9	04001-51	Bolt, 3/8-16 x 3-3/4" Hex Head	x
10	04063-08	Key, 1/4 x 1/4 x 2"	x
11	43592	Spacer, Cutter Blade - Small	x
12	04001-175	Bolt, 5/16-18 x 1-1/2" Hex Head Grade 8	x
13	482245	Spring, Chute Return	x
14	04019-03	Nut 5/16-18 Serrated Flange	x
15	481707	Cutter Blade, 18"	x
15A	481711	Cutter Blade, 18 Hi-Lift	x
16	04043-06	Flatwasher, 5/8 W	x
17	04001-41	Hex Hd. Bolt, 5/8-11 x 9-1/2"	x
18	461023	Caster Assembly	x
19	04017-16	Cpscrw,5/16-18 x 3/4" Ser.Flg. Hex Head	x
20	461295	Discharge Chute	x
20A	*462469	CA Discharge Chute	x
	*425872	Turbo Baffle	x
21	04021-10	Hex Nut, 5/16-18 Elastic Stop	x
22	04001-09	Hex Hd Bolt, 5/16-18 x 1"	x
23	462393	Belt Cover Assy (Incl. Decal)	x
24	04043-04	Flat Washer, 3/8" Special	x
25	04029-03	Wing Nut, 3/8-16	x
26	482744	Pulley	x
27	48926	Tapered Hub	x
28	04001-172	Hex Hd. Bolt, 1/4-20 x 1"	x
29	04020-09	Hex Nut, 5/8-11	x
30	48204	Belt, Blade Drive	x
31	04021-22	Elastic Stop Nut, 5/16-18 Grade 8	x
32	04021-05	Hex Nut, 3/8-16 Center Locknut	x
33	04019-04	Nut, 3/8-16 Serrated Flange	x
34	04004-02	Support, Belt Cover	x
35	04017-37	Cpscrw, 1/2-13 x 1=1/4" Ser.Flg. HH	x
36	04117-04	Nut, 1/2-13 Flange Elastic Stop	x
37	43277	Spacer, J-Hook	x
38	04041-12	Flatwasher, 3/8 x 1-1/2 x 16 GA	x
39	04021-09	Elastic Stop Nut, 3/8-16	x
40	43681	Idler Pivot	x
41	461841	Idler Arm Assy. (Inc. 42)	x
42	48224	Bearing	x
43	04001-62	Cpscrw, 3/8-16 x 3-1/4" Hex Head	x
44	44078	J-Hook	x
45	483215	Idler Pulley, Belt Clutch	x
46	481024	Seal, Cutter Spindle	x
47	43297	Spindle Bushing	x
48	43296	Spacer, Inside	x
49	481035	Nut,1.06-18	x
50	48677	Relief Fitting, Cutter Spindle	x
51	481025	Seal, Cutter Spindle	x
52	484368	Cap, Spindle	x
53	04029-04	Wing Nut, 3/8-16 (Small) RH side	x
54	48114-04	Grease Fitting	x
55	04021-09	Nut, Hex Elastic Stop 3/8-16	x
56	04030-03	Lock Washer, 5/16"	x
57	04003-23	Bolt, Carriage 3/8-16 x 1"	x
58	423783	Baffle Weldment	x
59	483174	Pad, Deck Wear	x
60	04003-12	Bolt, Carriage 5/16-18 x 3/4"	x
61	04040-04	Flatwasher, 5/16"	x
62	04021-04	Hex Nut, 5/16-18 Center Locknut	x
63	424367	Dust Shield	x

* = California Models Only (not shown)

48V & 52V CUTTER DECKS

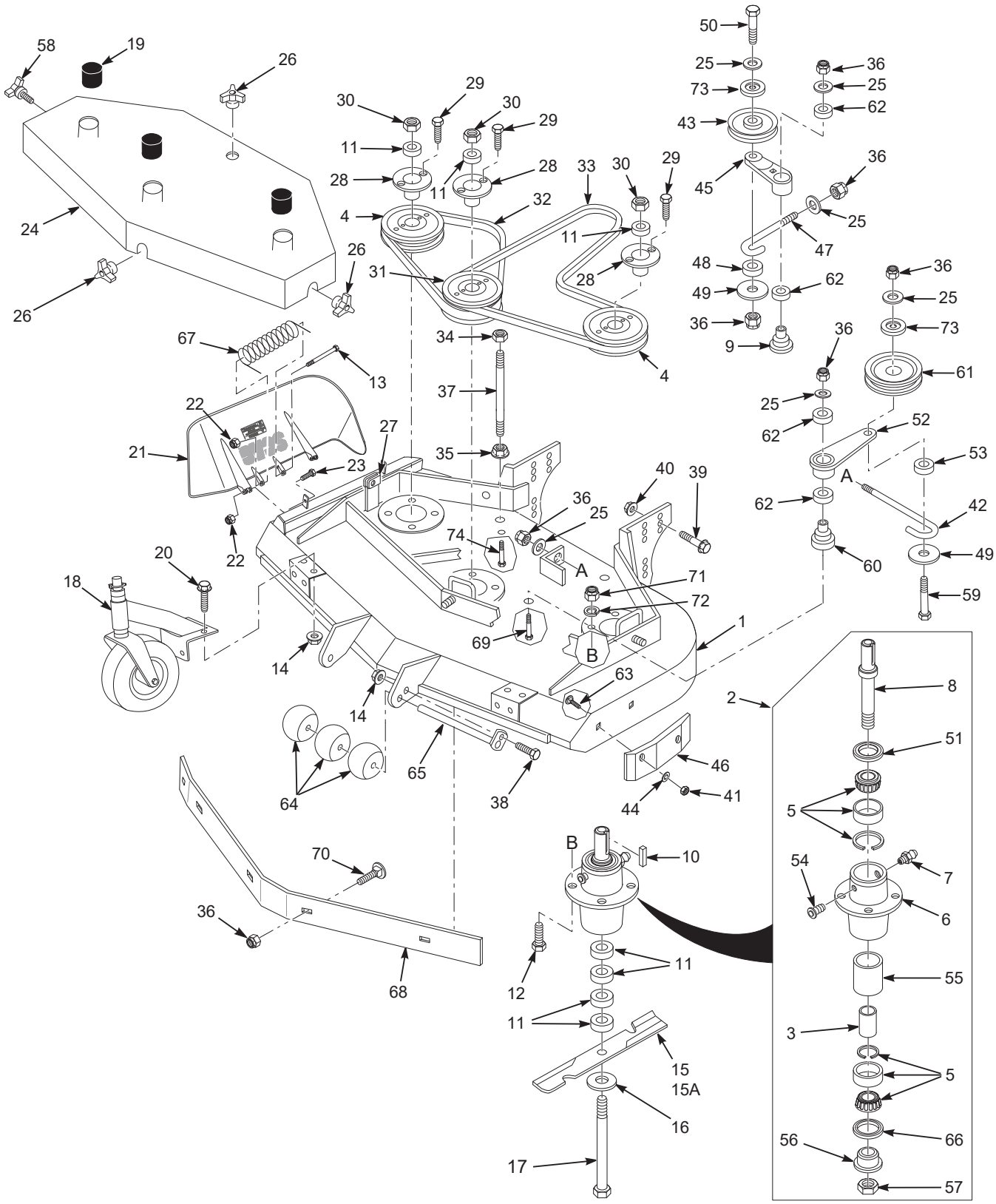

48V & 52V CUTTER DECKS

Ref. No.	Part No.	Description	48	52
1	461852	Cutter Deck w/Decals	x	
1*	461855	Cutter Deck w/Decals		x
1*	461992	Cutter Deck w/Decals		x
2	461663	Spindle Assembly	x	x
3	43296	Spacer, Inside	x	x
4	482744	Pulley	x	x
5	481022	Tapered Bearing	x	x
6	43644	Spindle Housing	x	x
7	48114-04	Grease Fitting Str. 5/16"	x	x
8	43589	Spindle Shaft	x	x
9	43682	Idler Pivot	x	x
10	04063-08	Key, 1/4 x 1/4 x 2"	x	x
11	43592	Spacer, Cutter Blade - Small	x	x
12	04001-175	Bolt, 5/16-18 x 1-1/2" Hex Head Gr. 8	x	x
13	04001-154	Bolt, 5/16-18 x 4-3/4" Hex Head	x	x
14	04019-03	Serr. Flange Nut, 5/16-18	x	x
15	481706	Cutter Blade 16-1/2"	x	
	481707	Cutter Blade 18"		x
15A	481710	Cutter Blade 16-1/2 Hi-Lift	x	
	481711	Cutter Blade 18 Hi-Lift		x
16	04043-06	Flatwasher,5/8" (.688 x 1.75 x .134)	x	x
17	04001-41	Hex Head Bolt, 5/8-11 x 9-1/2"	x	x
18	461023	Caster Assembly	x	x
19	484368	Cap, Spindle	x	x
20	04017-16	Capscrew, 5/16-18 x 3/4"	x	x
21	461844	Discharge Chute 48V	x	
	462473**	CA Discharge Chute, 48V	x	
	425619**	Turbo Baffle, 48V	x	
	461845	Discharge Chute 52V		x
	462475**	CA Discharge Chute, 52V		x
	424211**	Turbo Baffle, 52V		x
22	04021-10	Nut, 5/16-18 Elastic Elastic Stop	x	x
23	04001-11	Bolt, 5/16-18 x 1-1/2" Hex Head	x	x
24	462394	Belt Cover (Incl. decals)	x	
	462395	Belt Cover (Incl. decals)		x
25	04043-04	Flat Washer, 3/8" Special	x	x
26	04029-03	Wing Nut, 3/8-16 (Large)	x	x
27	04110-03	U-Nut, 3/8-16	x	x
28	48926	Tapered Hub		x
29	04001-172	Bolt, 1/4-20 x 1" Hex Head Grade 8	x	x
30	04020-09	Nut, 5/8-11 Hex	x	x
31	48923	Pulley, Double	x	x
32	48087	Belt, RH Blade Drive	x	
	48285	Belt, RH Blade Drive		x
33	48089	Belt, Blade Drive	x	
	483518	Belt, Blade Drive		x

Ref. No.	Part No.	Description	48	52
34	04021-05	Nut, 3/8-16, Nut Centerlock	x	x
35	04019-04	Nut, 3/8-16, Serrated Flange	x	x
36	04021-09	Nut, 3/8-16 Elastic Stop	x	x
37	04004-02	Bolt, 5/16-18 x 1" Hex Head	x	x
38	04001-09	Bolt, 5/16-18 x 1" Hex Head		x
39	04017-37	Cpscrw, 1/2-13 x 1-1/4" Ser. Flg. HH	x	x
40	04117-04	Nut, 1/2-13 Flange El. Stop	x	x
41	04021-04	Hex Nut, 5/16-18 Center Locknut	x	x
42	44078	J-Hook, 48V	x	
	43028	J-Hook, 52V		x
43	48181	Idler Pulley, “V” Groove	x	x
44	04040-04	Flatwasher, 5/16"	x	x
45	461091	Idler Arm Assy. (Incl. 62)	x	x
46	483176	Pad, Deck Wear	x	x
47	43028	J-Rod, Idler Pulley	x	x
48	43077	Spacer, J-Rod	x	x
49	04041-12	Washer, 3/8 x 1-1/2 x 16 ga.	x	x
50	04001-31	Bolt, 3/8-16 x 2-1/2" Hex Head	x	x
51	481024	Seal, Cutter Spindle	x	x
52	461841	Idler Arm Assy (Includes 62)	x	x
53	43277	Spacer, J-Rod	x	x
54	48677	Relief Fitting, Cutter Spindle	x	x
55	43312	Spacer, Outside, Cutter Spindle	x	x
56	43297	Spindle Bushing	x	x
57	481035	Nut, Cutter Spindle	x	x
58	481625-01	Knob, w/stud	x	x
59	04001-51	Bolt, 3/8-16 x 3-3/4" Hex Head	x	x
60	43681	Idler Pivot	x	x
61	483215	Idler Pulley, Belt Clutch	x	x
62	48224	Bearing	x	x
63	04003-12	Bolt, Carriage 5/16-18 x 3/4"	x	x
64	482295	Guide Roller	x	x
65	45944	Roller Shaft	x	x
66	481025	Seal, Cutter Spindle	x	x
67	483378	Spring, Chute Return	x	x
68	424839	Baffle Weldment 48V	x	
	424840	Baffle Weldment 52V		x
69	04001-62	Bolt, 3/8-16 x 3-1/4" Hex Head	x	x
70	04003-23	Bolt, Carriage 3/8-16 x 1"	x	x
71	04021-22	Nut, Hex Lock 5/16-18	x	x
72	04030-03	Lock Washer 5/16"	x	x
73	424367	Dust Shield	x	x
74	04001-22	Bolt, 3/8-16 x 2-3/4" Hex Head	x	x

*Measure the engine deck to determine frame size. 461855 is for small frame (16") & 461992 is for large frame (20")

**California Models Only (not shown)

61V CUTTER DECK

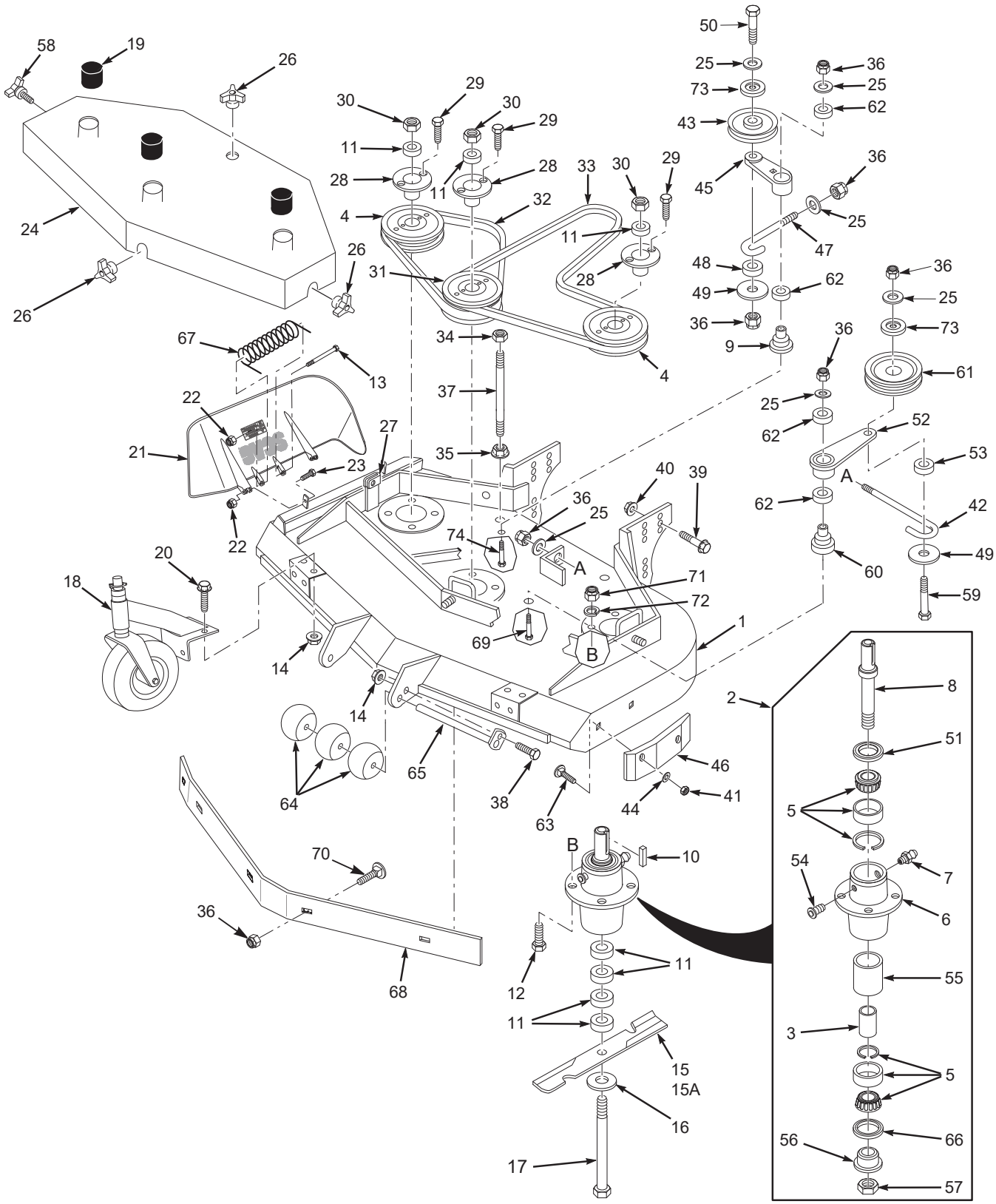

61V CUTTER DECK

Ref. No.	Part No.	Description
1	461860	Cutter Deck w/Decals
2	461663	Spindle Assembly
3	43296	Spacer, Inside
4	482745	Pulley
5	481022	Tapered Bearing
6	43644	Spindle Housing
7	48114-04	Grease Fitting Str. 5/16"
8	43589	Spindle Shaft
9	43682	Idler Pivot
10	04063-08	Key, 1/4 x 1/4 x 2"
11	43592	Spacer, Cutter Blade - Small
12	04001-175	Bolt, 5/16-18 x 1-1/2" Hex Head Gr. 8
13	04001-154	Bolt, 5/16-18 x 4-3/4" Hex Head
14	04019-03	Serr. Flange Nut, 5/16-18
15	481708	Cutter Blade 21"
15A	481712	Cutter Blade 21" Hi-Lift
16	04043-06	Flatwasher,5/8" (.688 x 1.75 x .134)
17	04001-41	Hex Head Bolt, 5/8-11 x 9-1/2"
18	461023	Caster Assembly
19	484368	Cap, Spindle
20	04017-16	Capscrew, 5/16-18 x 3/4"
21	461846	Discharge Chute 61V
22	04021-10	Nut, 5/16-18 Elastic Elastic Stop
23	04001-11	Bolt, 5/16-18 x 1-1/2" Hex Head
24	461868	Belt Cover (Incl. decals)
25	04043-04	Flat Washer, 3/8" Special
26	04029-03	Wing Nut, 3/8-16 (Large)
27	04110-03	U-Nut, 3/8-16
28	48926	Tapered Hub
29	04001-172	Bolt, 1/4-20 x 1" Hex Head Grade 8
30	04020-09	Nut, 5/8-11 Hex
31	48940	Pulley, Double
32	48265	Belt, RH Blade Drive
33	48088	Belt, Blade Drive
34	04021-05	Nut, 3/8-16, Nut Centerlock
35	04019-04	Nut, 3/8-16, Serrated Flange
36	04021-09	Nut, 3/8-16 Elastic Stop
37	04004-02	Bolt, 5/16-18 x 1" Hex Head
38	04001-09	Bolt, 5/16-18 x 1" Hex Head
39	04017-37	Cpscrw, 1/2-13 x 1-1/4" Ser.Flg. HH
40	04117-04	Nut, 1/2-13 Flange Elastic Stop
41	04021-04	Hex Nut, 5/16-18 Center Locknut
42	44078	J-Hook, 61V
43	48181	Idler Pulley, “V” Groove
44	04040-04	Flatwasher, 5/16"

Ref. No.	Part No.	Description
45	461091	Idler Arm Assy. (Incl. 62)
46	483176	Pad, Deck Wear
47	43028	J-Rod, Idler Pulley
48	43077	Spacer, J-Rod
49	04041-12	Washer, 3/8 x 1-1/2 x 16 ga.
50	04001-31	Bolt, 3/8-16 x 2-1/2" Hex Head
51	481024	Seal, Cutter Spindle
52	461841	Idler Arm Assy (Includes 62)
53	43277	Spacer, J-Rod
54	48677	Relief Fitting, Cutter Spindle
55	43312	Spacer, Outside, Cutter Spindle
56	43297	Spindle Bushing
57	481035	Nut, Cutter Spindle
58	481625-01	Knob, w/stud
59	04001-51	Bolt, 3/8-16 x 3-3/4" Hex Head
60	43681	Idler Pivot
61	483215	Idler Pulley, Belt Clutch
62	48224	Bearing
63	04003-12	Bolt, Carriage 5/16-18 x 3/4"
64	482295	Guide Roller
65	45944	Roller Shaft
66	481025	Seal, Cutter Spindle
67	483378	Spring, Chute Return
68	424841	Baffle Weldment 61V
69	04001-62	Bolt, 3/8-16 x 3-1/4" Hex Head
70	04003-23	Bolt, Carriage 3/8-16 x 1"
71	04021-22	Nut, Hex Lock 5/16-18
72	04030-03	Lock Washer 5/16"
73	424367	Dust Shield
74	04001-22	Bolt, 3/8-16 x 2-3/4" Hex Head

ENGINE DECK - MANUAL START

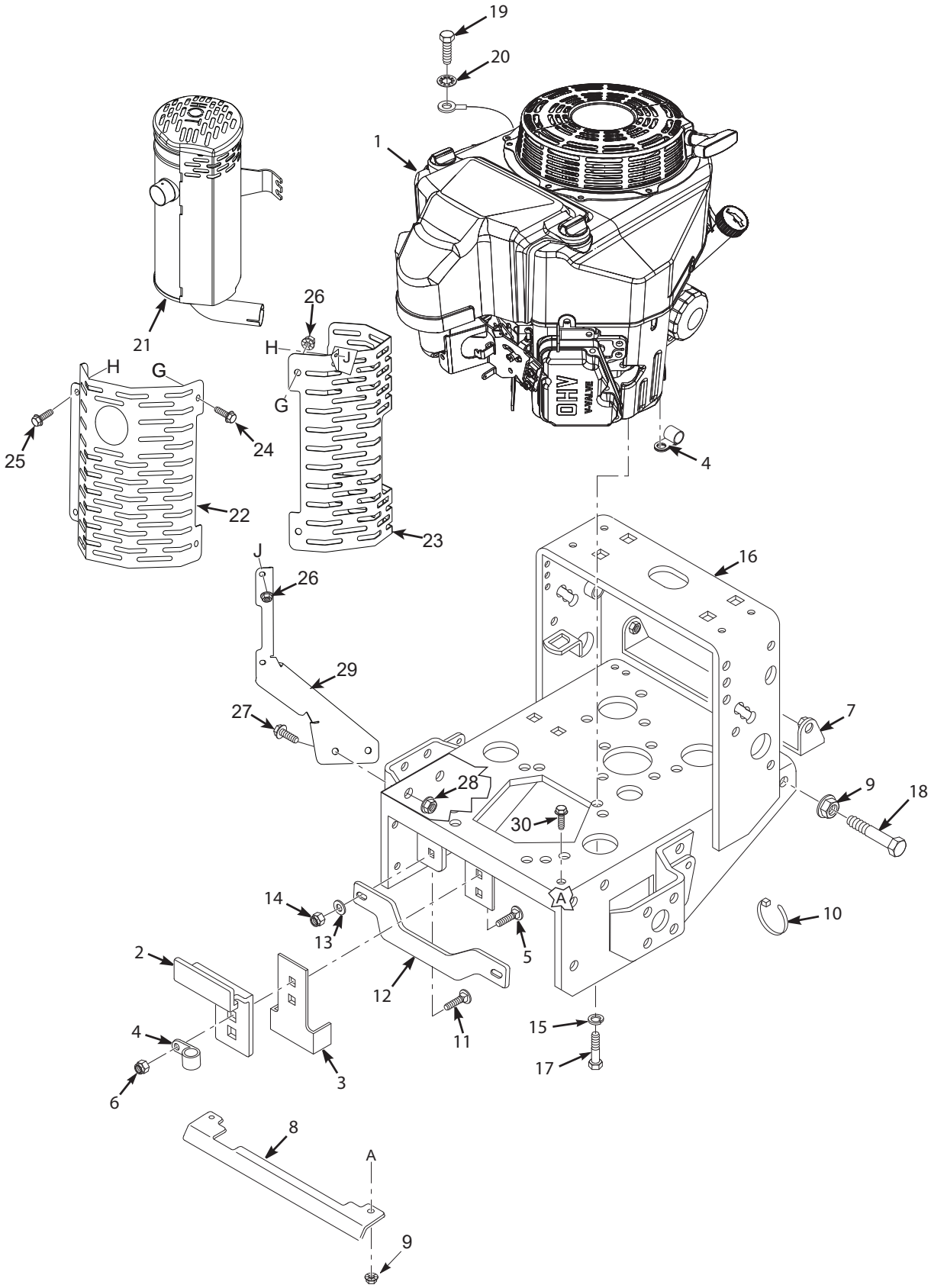

ENGINE DECK - MANUAL START

Ref. No.	Part No.	Description
1	*	Engine, Kawasaki 14FS (FS481V-FS18)
2	424620	Plate, Clutch Bracket
3	421370	Clutch Bracket
4	48030-09	Clamp
5	04003-04	Bolt, Carriage 5/16-18 x 1"
6	04021-10	Nut, 5/16-18 Elastic Stop
7	45418	Pulley Guard, 16" Small Frame
8	424661	Heatshield, 16" Small Frame
9	04019-03	Nut, 5/16-18 Serr. Flange
10	48028-05	Cable Tie
11	04003-11	Bolt, Carriage 3/8-16 x 1-1/4"
12	424002	Brace, 16" Small Frame
13	04043-04	Flatwasher, .391 x .938 x .105
14	04021-09	Nut, 3/8-16 Elastic Stop
15	04030-04	Lockwasher, 3/8"
16	462287	Engine Deck, 16" Wide w/Decals
17	04001-32	Bolt, Hex Head 3/8-16 x 1-1/4"
18	04001-17	Bolt, 5/16-18 x 2" Hex Head
19	04002-06	Bolt, Hex Head M8-1.25 x 16
20	04031-03	Lockwasher, 5/16" Ext. Tooth
21	484620	Muffler, Kawasaki FS/FX
22	4201134	Shield, Muffler Outer
23	4201133	Shield, Muffler Inner
24	04001-07	Bolt, 5/16-18 x .5" Hex Head
25	04001-08	Bolt, 5/16-18 x .75" Hex Head
26	04117-01	Lknut, 5/16-18 Elastic Stop w/Flange
27	04017-37	Bolt, 1/2-13 x 1.25" Serrated Flange HH
28	04117-04	Lknut, 1/2-13 Elastic Stop w/Flange
29	453755	Brkt, Muffler Guard Mtg.
30	04017-16	Cap Screw, 5/16-18 x .75 Serr. Flange HH

* Available through engine manufacturer.

ENGINE DECK - ELECTRIC START

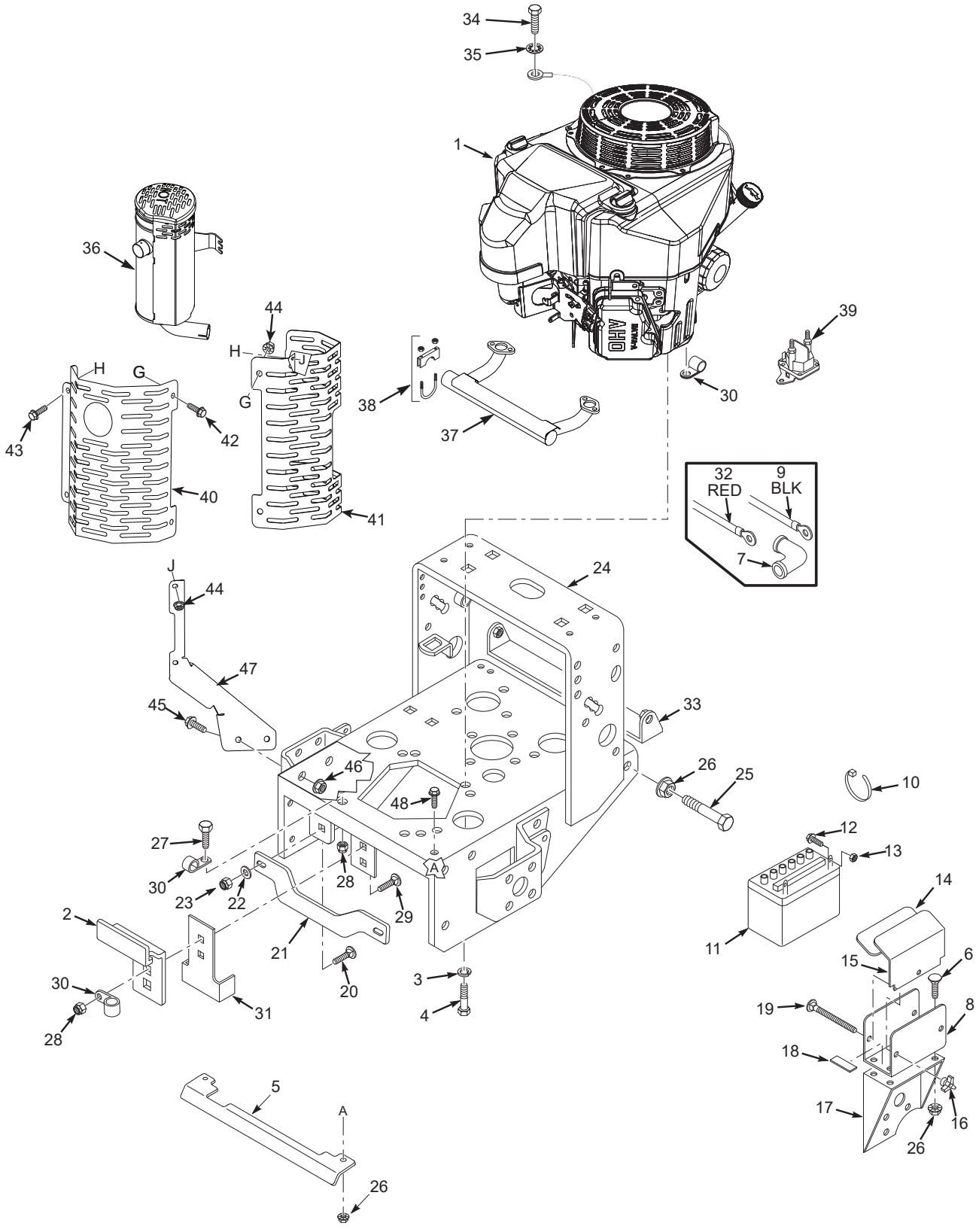

ENGINE DECK - ELECTRIC START

Ref. No.	Part No.	Description
1	*	Engine, Kawasaki FS15 (FS541V-AS41R)
	*	Engine, Kawasaki FS18 (FS600V-T12-R)
	*	Engine, Kawasaki FS22 (FS651V-DS10)
2	424620	Plate, Clutch Bracket
3	04030-04	Lock Washer 3/8"
4	04001-32	Bolt, Hex Head 3/8-16 x 1-1/4"
5	424661	Heatshield, 16" Small Frame
	424730	Heatshield, 20" Large Frame
6	04003-12	Carriage Bolt, 5/16-18 x .75"
7	48126	Rubber Boot
8	423308	Battery Box
9	48029-14	Battery Cable, 31.5" Black
10	48028-05	Cable Tie
11	**	Battery (Not Available Through Scag)
12	04001-44	Bolt, 1/4-20 x 1/2"
13	04020-02	Nut, 1/4-20
14	48099	Pad
15	42392	Battery Cover
16	04029-01	Wing Nut, 1/4-20
17	423746	Battery Support
18	48661	Pad, Rubber
19	04003-39	Bolt, 1/4-20 x 6" Carriage
20	04003-11	Carriage Bolt, 3/8-16 X 1-1/4"
21	424002	Brace, 16" Large Frame
	424009	Brace, 20" Large Frame
22	04043-04	Flat Washer .391 x .938 x .105
23	04021-09	Nut, 3/8-16 Elastic Stop
24	462287	Engine Deck, 16" Wide, w/decals
	462288	Engine Deck, 20" Wide, w/decals
25	04001-17	Bolt, 5/16-18 x 2" Hex Head
26	04019-03	Nut, 5/16-18 Serr. Flange
27	04001-08	Hex Head Bolt, 5/16-18 x .75"
28	04021-10	Nut, 5/16-18 Elastic Stop

Ref. No.	Part No.	Description
29	04003-04	Carriage Bolt, 5/16-18 x 1"
30	48030-09	Clamp
31	421370	Clutch Bracket
32	48029-13	Battery Cable, 25" Red
	48029-06	Battery Cable, 18" Red
33	45418	Pulley Guard, 16" Frame
	45419	Pulley Guard, 20" Frame
34	04002-06	Bolt, Hex Head M8-1.25 x 16
35	04031-03	Lockwasher, 5/16" Ext. Tooth
36	484620	Muffler - FS541V & FS600V
	485571	Muffler - FS651V
37	485327	Exhaust Manifold - FS541V, FS600V
	485572	Exhaust Manifold - FS651V
38	484334	Clamp, Muffler 1-1/8" Dia. - FS541V, FS600V
	481259	Clamp, Muffler 1-1/8" Dia. - FS651V
39	483278	Solenoid
40	4201134	Shield, Muffler Outer
	4201225	Shield, Muffler Outer (SWZL Only)
41	4201133	Shield, Muffler Inner
42	04001-07	Bolt, 5/16-18 x .5" Hex Head
43	04001-08	Bolt, 5/16-18 x .75" Hex Head
44	04117-01	Lknut, 5/16-18 Elastic Stop w/Flange
45	04017-37	Bolt, 1/2-13 x 1.25" Serrated Flange HH
46	04117-04	Lknut, 1/2-13 Elastic Stop w/Flange
47	453755	Brkt, Muffler Guard Mtg.
	453785	Brkt, Muffler Guard Mtg. (SWZL Only)
48	04017-16	Cap Screw, 5/16-18 x .75 Serrated Flange HH

* Available through engine manufacturer
** Not available through Scag

DRIVE AND BRAKE COMPONENTS

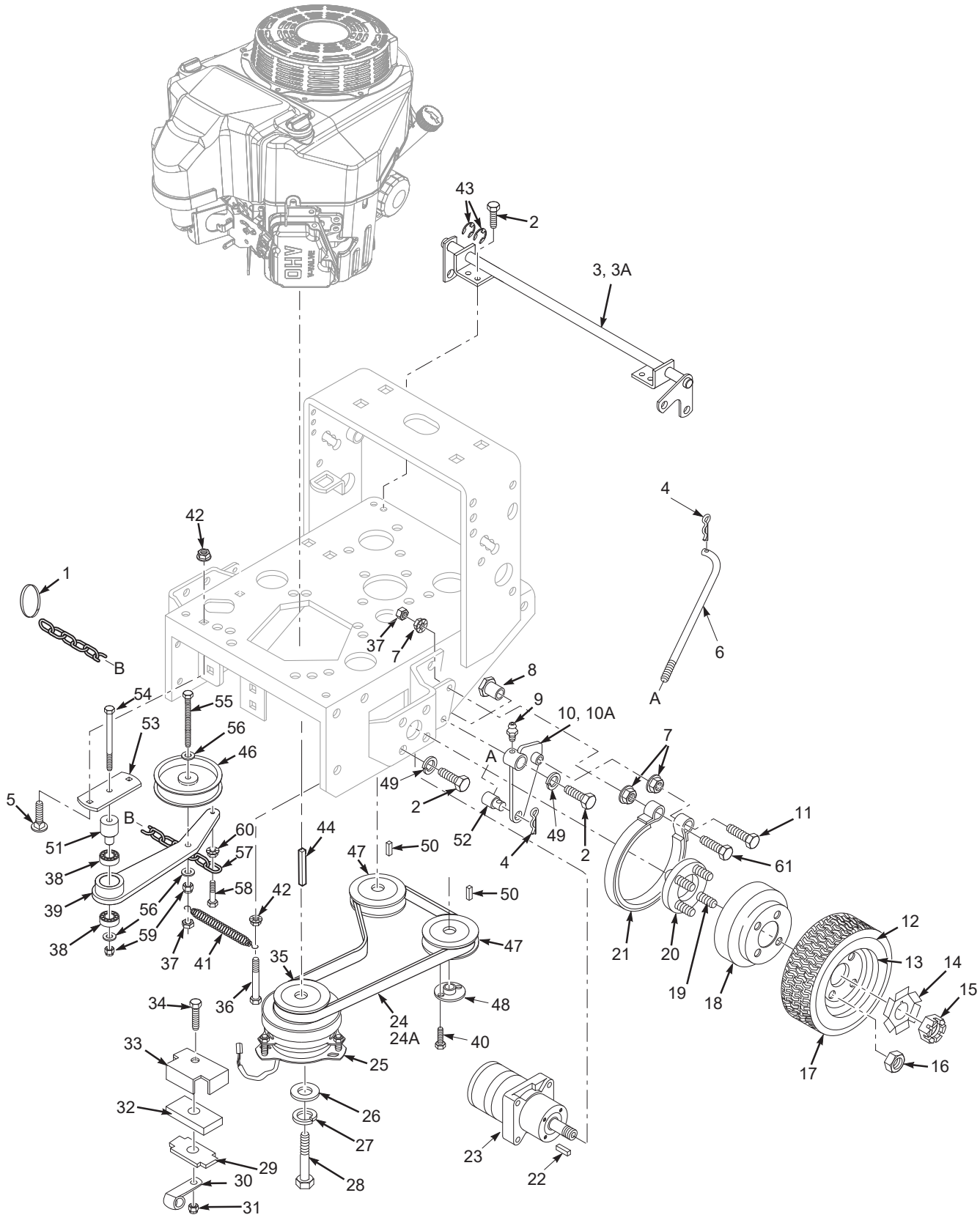

DRIVE AND BRAKE COMPONENTS

Ref. No.	Part No.	Description
1	481876	Ring, Split
2	04001-19	Bolt, 3/8-16 x 1" Hex Head
3	45842	Brake Shaft Assembly Weldment, 16" Small Frame
3A	45854	Brake Shaft Assembly Weldment, 20" Large Frame
4	04062-01	Hair Pin Cotter, .094 x 1.62
5	04003-12	Carrage Bolt, 5/16-18 x .75"
6	44126	Rod, Brake Lower
7	04019-04	Nut, 3/8-16 Serr. Flange
8	43415	Bushing, Brake
9	48114-05	Grease Fitting
10	45860	Brake Actuator Weldment-LH
10A	45861	Brake Actuator Weldment-RH
11	04001-46	Bolt, 3/8-16 x 2-1/4"
12	481618	Tire, 16 x 6.50, 4 ply
13	481890	Rim Assy
14	422214	Lock Washer, Wheel Motor
15	04027-01	Hex Castle Nut, 3/4-16 UNEF
16	04028-02	Nut, Lug
17	481502	Wheel Assy., (incl. 12,13)
18	422215	Brake Drum
19	04008-01	1/2-20 Serrated Bolt
20	46928	Hub, Wheel
21	481470	Brake Band, 7.5"
22	04063-07	Key, 3/16 X .75 Woodruff
23	481416	Wheel Motor
24	48553	Belt, Pump Drive, 16" Small Frame
24A	48587	Belt, Pump Drive, 20" Large Frame
25	461397	Electric Clutch
26	04041-28	Flat Washer .469 x 1.75 x .25
27	04030-05	Lock Washer, 7/16"
28	04102-05	Hex Head Bolt, 7/16-20 x 2-3/4"
29	422534	Plate, Backing
30	48030-09	Clamp
31	04021-10	Nut, 5/16-18 Elastic Stop
32	481716	Rubber Pad, Clutch Stop
33	422533	Retainer, Clutch Stop
34	04001-12	Hex Head Bolt, 5/16-18 x 1.75"
35	482755	Pulley, Pump Drive Engine
36	04001-77	Hex Head Bolt, 3/8-16 x 3.50"
37	04021-05	Nut, 3/8-16 Center Lock
38	48224	Ball Bearings
39	461783	Idler Arm Weldment, Pump (incl. 38)
40	04001-172	Bolt, Hex Head 1/4-20 x 1" Grd 8
41	483526	Spring, Pump Belt Idler
42	04019-03	Nut, 5/16-18 Serr. Flange
43	04050-02	Retaining Ring, 3/4" Ext. "E"
44	04063-29	Key, 1/4x1/4 x 3.75"
45	04041-07	Flat Washer, 3/8"
46	483213	Pulley, Idler 4.5"
47	482649	Pulley, Pump Shaft
48	482085	Tapered Hub
49	04030-04	Lockwasher, 3/8"
50	04063-14	Key, 5.0 x 5.0 x 25mm
51	43504	Pivot, Idler (Long)
52	43032	Swivel Joint
53	422713	Base, Idler Pivot
54	04001-54	Bolt, Hex Head 3/8-16 x 3"
55	04001-161	Bolt, Hex Head 3/8-16 x 2.75"
56	04043-04	Flatwasher 3/8"
57	481873	Chain
58	04001-59	Bolt, Hex Head 1/4-20 x 1.25"
59	04021-09	Nut, Hex Elastic Stop 3/8-16
60	04019-02	Nut, Serrated Flange 1/4-20
61	04001-151	Bolt, Hex Head 3/8-16 x 2.63"

HANDLE ASSEMBLY - RECOIL START

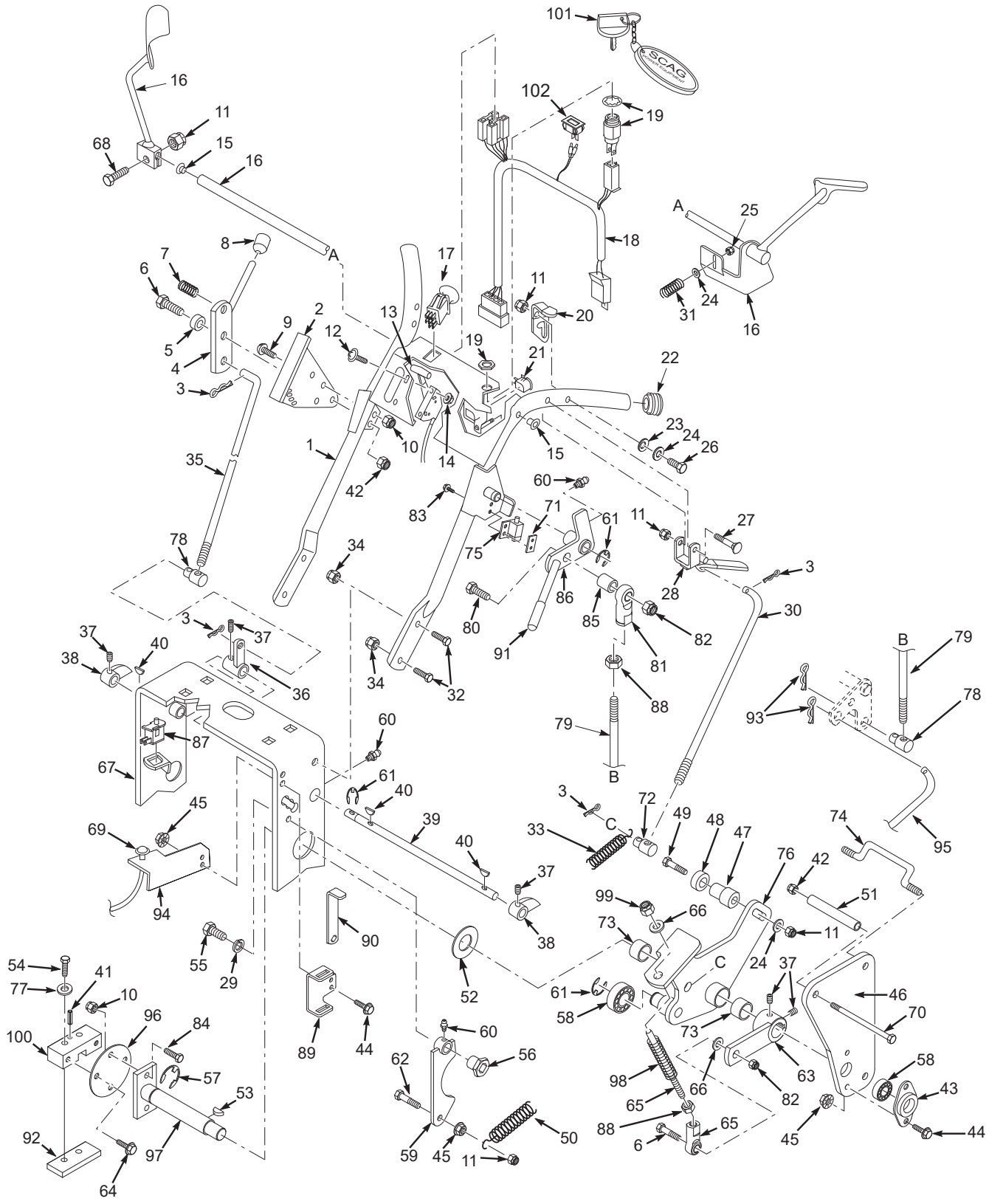

HANDLE ASSEMBLY - RECOIL START

Ref. No.	Part No.	Description
1	463098	Upper Handle Wlmt. W/Decals
2	42675	Quadrant, Speed Control
3	04062-02	Hairpin, .094 x 1.19
4	45282	Lever, Speed Adjustment
5	43086	Bushing, Speed Adjustment Lever
6	04001-20	Hex Head Bolt, 3/8-16 x 1.5"
7	48493-01	Ball Plunger
8	48092	Knob, Speed Adjustment
9	04014-01	Capscrew, 1/4-20 x 3/4" FHHS
10	04021-08	Nut, 1/4-20 Elastic Stop
11	04021-10	Nut, 5/16-18 Elastic Stop
12	04003-43	Bolt, Carriage #10-24 x 1/2”
13	48946	Throttle Control
14	04021-26	Locknut, #10-24
15	483142	Bushing
16	451917	Handle, Oper. Presence-RH
	451915	Handle, Oper. Presence-LH
17	485833	Switch, Electric Clutch Engage
18	486119	Wire Harness, Manual Start
19	48609	Key Switch, Manual Srt. (inc. Hdw)
20	422880	Neutral Latch-RH
	422879	Neutral Latch-LH
21	48717	Switch, Neutral Interlock
22	483161	Plug, Handlebar
23	04032-01	Washer, Curved Spring
24	04040-15	Flat Washer
25	04021-10	Nut, 5/16-18 Elastic Stop
26	04001-17	Hex Head Bolt, 5/16-18 x 2"
27	04001-53	Hex Hd. Bolt, 5/16-18 x 2.5"
28	483160	Lever, Steering Control
29	04030-04	Lockwasher, 3/8 Spring
30	44141	Rod, Steering Control
31	483040	Spring, Operator Presence
32	04017-27	Capscr., 3/8-16 x 1" Ser. Flange
33	483470	Spring
34	04019-04	Nut, 3/8-16 Serr. Flange
35	44142	Rod Speed Control
36	43887	Bellcrank, Speed Control
37	04012-02	Setscrew, 1/4-28 x .25"
38	46335	Cam, Speed Control (incl. 37)
39	43166	Jackshaft, Speed Control
40	04063-13	Key, 1/8 x 1/2" Woodruff
41	04060-06	Roll Pin, 3/16-.75
42	04021-10	Nut, Elastic Stop 3/8-16
43	48223	Flange, Bearing
44	04017-17	Capscrew, 5/16-18 x 1" Serr. Flg.
45	04019-03	Nut, 5/16-18 Serrated Flange
46	422795	Plate, Side
47	43536	Spacer, Neutral Bearing
48	48409	Bearing, Speed Ctrl. Bellcrank
49	04001-69	Hex Head Bolt, 5/16-18 x 1-3/4"
50	48494-02	Spring, Return
51	43522	Spacer, Side Plate
52	04041-08	Flatwasher, .766 x 1.25 x .035

Ref. No.	Part No.	Description
53	04063-07	Key, Woodruff, 3/16 x .75
54	04001-59	Bolt, Hex Head, 1/4-20 x 1.25"
55	04001-19	Bolt, Hex Head, 3/8-16 x 1"
56	43415	Bushing, Brake
57	04050-02	Clip, Retaining .750 diameter
58	48224	Bearing, Ball Neutral Return
59	46747	Cam, Neutral (incl. grease ftng.)
60	48114-05	Grease Fitting, 1/4-28 UNF
61	04050-01	Retaining Ring, 5/8"
62	04001-09	Hex Head Bolt, 5/16-18 x 1"
63	483414	Lever, Speed Control
64	04017-05	Bolt, Hex Head 1/4-20 x.75"
65	482431	Linkage Assembly
66	04041-07	Flat Wshr., 15/16 x .3906 x 12 ga
67	462287	Deck, Engine 16" Wide
68	04001-10	Hex Head Bolt, 5/16-18 x 1.25"
69	482314	Choke Control
70	04001-152	Bolt, Hex Head 3/8-16 x 4.25"
71	422373	Plate, Threaded
72	43520	Swivel Joint, Steering Rod
73	48100-06	Bushing
74	44144	Rod, Offset
75	481545	Switch, Parking Brake
76	461964	Control, LH (inc. bush. & decal)
	461965	Control, RH (inc. bush. & decal)
77	04030-02	Lockwasher, 1/4"
78	43032	Swivel Joint
79	44143	Rod, Brake Lever
80	04001-45	Hex Hd. Bolt, 3/8-16 x 2"
81	48464	Ball Joint, RH Thread
82	04021-09	Nut, 3/8-16 Elastic Stop
83	04010-12	Screw #10-32 Sltd Hex Wshr Hd
84	04001-01	Bolt, 1/4-20 x .75"
85	43286	Spacer
86	462746	Parking Brake Lever w/Grip & Grease Fitting
87	48717	Switch, Safety
88	04020-14	Nut, 3/8-24
89	423876	Mounting Bracket, Wrench
90	423875	Wrench
91	48342	Grip, Parking Brake
92	421203	Plate, Threaded
93	04062-01	Hairpin, .094 x 1.62"
94	424113	Bracket, Choke Mtg.
95	44126	Rod, Lower Brake
96	422273	Plate, Coupler
97	451113	Shaft, Pump Control
98	481879	Spring
99	04021-09	Nut, 3/8-16 Elastic Stop
100	48829	Block, Pump Control
101	462069	Key Chain with Keys
	483609	Key with Shroud
102	484565	Hourmeter

HANDLE ASSEMBLY - ELECTRIC START

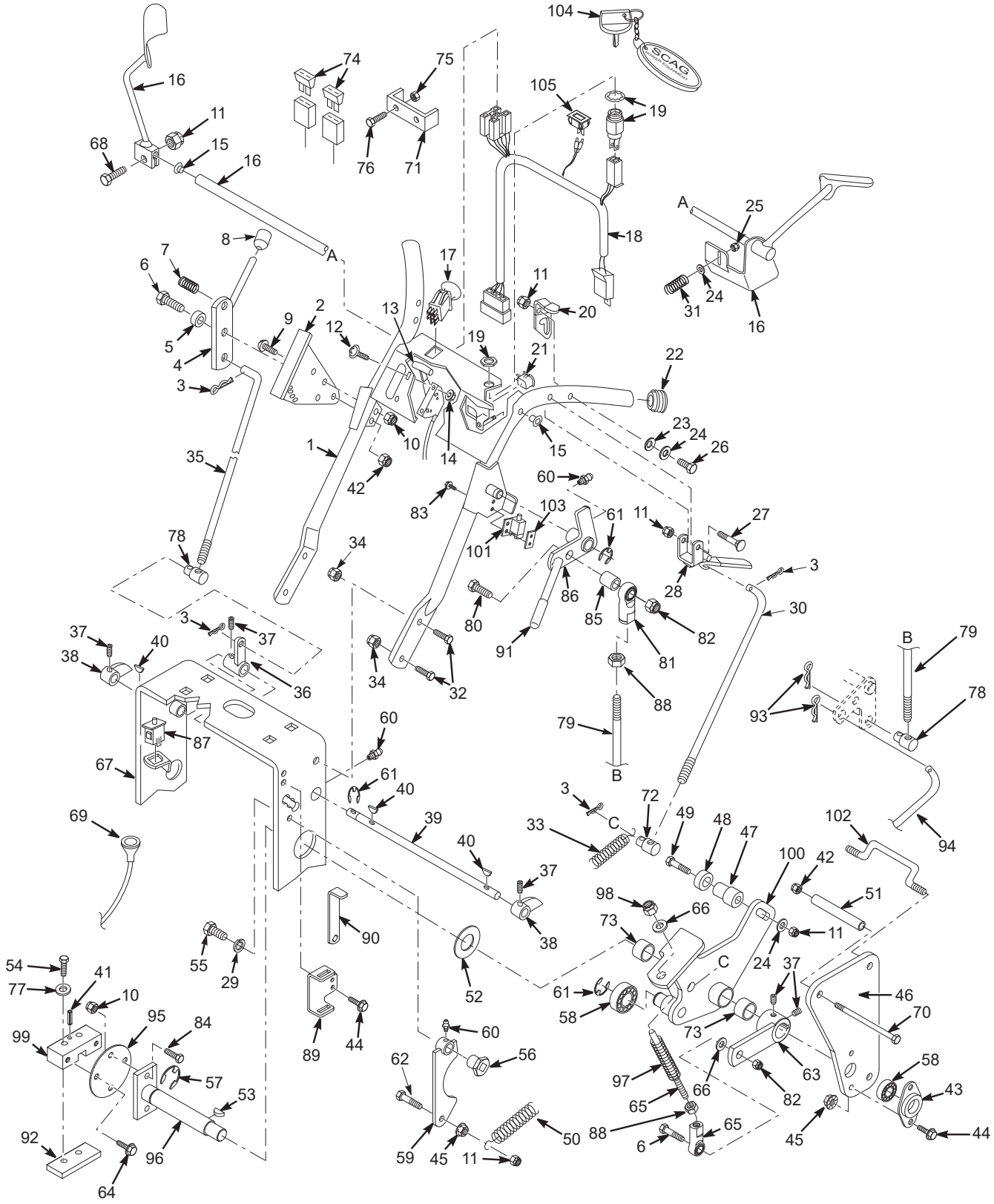

HANDLE ASSEMBLY - ELECTRIC START

Ref. No.	Part No.	Description
1	463098	Upper Handle Wlmt, 16" Wide w/Decals
	463099	Upper Handle Wlmt, 20" Wide w/Decals
2	42675	Quadrant, Speed Control
3	04062-02	Hairpin, .094 x 1.19
4	45282	Lever, Speed Adjustment
5	43086	Bushing, Speed Adjustment Lever
6	04001-20	Hex Head Bolt, 3/8-16 x 1.5"
7	48493-01	Ball Plunger
8	48092	Knob, Speed Adjustment
9	04014-01	Capscrew, 1/4-20 x 3/4" FHHS
10	04021-08	Nut, 1/4-20 Elastic Stop
11	04021-10	Nut, 5/16-18 Elastic Stop
12	04003-43	Bolt, Carriage 1/4-20 x 1/2”
13	48946	Throttle Control
14	04021-26	Lock Nut, #10-24
15	483142	Bushing
16	451917	Handle, Oper. Presence-RH
	451915	Handle, Oper. Presence-LH, 16" Frame
	451916	Handle, Oper. Presence-LH, 20" Frame
17	485833	Switch, Electric Clutch Engage
18	487329	Wire Harness, Electric Start
19	48798	Key Switch, Electric Srt. (inc. Hdw)
20	422880	Neutral Latch-RH
	422879	Neutral Latch-LH
21	48717	Switch, Neutral Interlock
22	483161	Plug, Handlebar
23	04032-01	Washer, Curved Spring
24	04040-15	Flat Washer
25	04021-10	Nut, 5/16-18 Elastic Stop
26	04001-17	Hex Head Bolt, 5/16-18 x 2"
27	04001-53	Hex Hd. Bolt, 5/16-18 x 2.5"
28	483160	Lever, Steering Control
29	04030-04	Lockwasher, 3/8 Spring
30	44141	Rod, Steering Control
31	483040	Spring, Operator Presence
32	04017-27	Capscr., 3/8-16 x 1" Ser. Flange
33	483470	Spring
34	04019-04	Nut, 3/8-16 Serr. Flange
35	44142	Rod Speed Control
36	43887	Bellcrank, Speed Control
37	04012-0	Setscrew, 1/4-28 x .25"
38	46335	Cam, Speed Control (incl. 37)
39	43166	Jackshaft, Speed Control, 16" Frame
	43155	Jackshaft, Speed Control, 20" Frame
40	04063-13	Key, 1/8 x 1/2" Woodruff
41	04060-06	Roll Pin, 3/16-.75
42	04021-10	Nut, Elastic Stop 3/8-16
43	48223	Flange, Bearing
44	04017-17	Capscrew, 5/16-18 x 1" Serr. Flg.
45	04019-03	Nut, 5/16-18 Serrated Flange
46	422795	Plate, Side
47	43536	Spacer, Neutral Bearing
48	48409	Bearing, Speed Ctrl. Bellcrank
49	04001-69	Hex Head Bolt, 5/16-18 x 1-3/4"
50	48494-02	Spring, Return
51	43522	Spacer, Side Plate
52	04041-08	Flatwasher, .766 x 1.25 x .035

Ref. No.	Part No.	Description
53	04063-07	Key, Woodruff, 3/16 x .75
54	04001-59	Bolt, Hex Head, 1/4-20 x 1.25"
55	04001-19	Bolt, Hex Head, 3/8-16 x 1"
56	43415	Bushing, Brake
57	04050-02	Clip, Retaining .750 diameter
58	48224	Bearing, Ball Neutral Return
59	46747	Cam, Neutral (incl. grease ftng.)
60	48114-05	Grease Fitting, 1/4-28 UNF
61	04050-01	Retaining Ring, 5/8"
62	04001-09	Hex Head Bolt, 5/16-18 x 1"
63	483414	Lever, Speed Control
64	04017-05	Bolt, Hex Head 1/4-20 x.75"
65	482431	Linkage Assembly
66	04041-07	Flat Wshr., 15/16 x .3906 x 12 ga
67	462287	Deck, Engine 16" Wide
	462288	Deck, Engine 20" Wide
68	04001-10	Hex Head Bolt, 5/16-18 x 1.25"
69	482314	Choke Control
70	04001-152	Bolt, Hex Head 3/8-16 x 4.25"
71	42413	Bracket, Fuse Holder - 22FSE
72	43520	Swivel Joint, Steering Rod
73	48100-06	Bushing
74	48298	Blade Fuse, 20A
75	04021-01	Nut, #10-32 Elastic Stop - 2FSE
76	04010-03	Screw, #10-32 x 1.5" Phillips - 22FSE
77	04030-02	Lockwasher, 1/4"
78	43032	Swivel Joint
79	44143	Rod, Brake Lever
80	04001-45	Hex Hd. Bolt, 3/8-16 x 2"
81	48464	Ball Joint, RH Thread
82	04021-09	Nut, 3/8-16 Elastic Stop
83	04010-12	Screw #10-32 Sltd Hex Wshr Hd
84	04001-01	Bolt, 1/4-20 x .75"
85	43286	Spacer
86	462746	Parking Brake Lever w/Grip & Grease Fitting
87	487327	Switch, Safety
88	04020-14	Nut, 3/8-24
89	423876	Mounting Bracket, Wrench
90	423875	Wrench
91	48342	Grip, Parking Brake
92	421203	Plate, Threaded
93	04062-01	Hairpin, .094 x 1.62"
94	44126	Rod, Lower Brake
95	422273	Plate, Coupler
96	451113	Shaft, Pump Control
97	481879	Spring
98	04021-09	Nut, 3/8-16 Elastic Stop
99	48829	Block, Pump Control
100	461964	Control, LH (inc. bush. & decal)
	461965	Control, RH (inc. bush. & decal)
101	481545	Switch, Parking Brake
102	44144	Rod, Offset
103	422373	Plate, Threaded
104	462069	Key Chain with Keys
	483609	Key with Shroud
105	484565	Hourmeter

SWZ FUEL SYSTEM

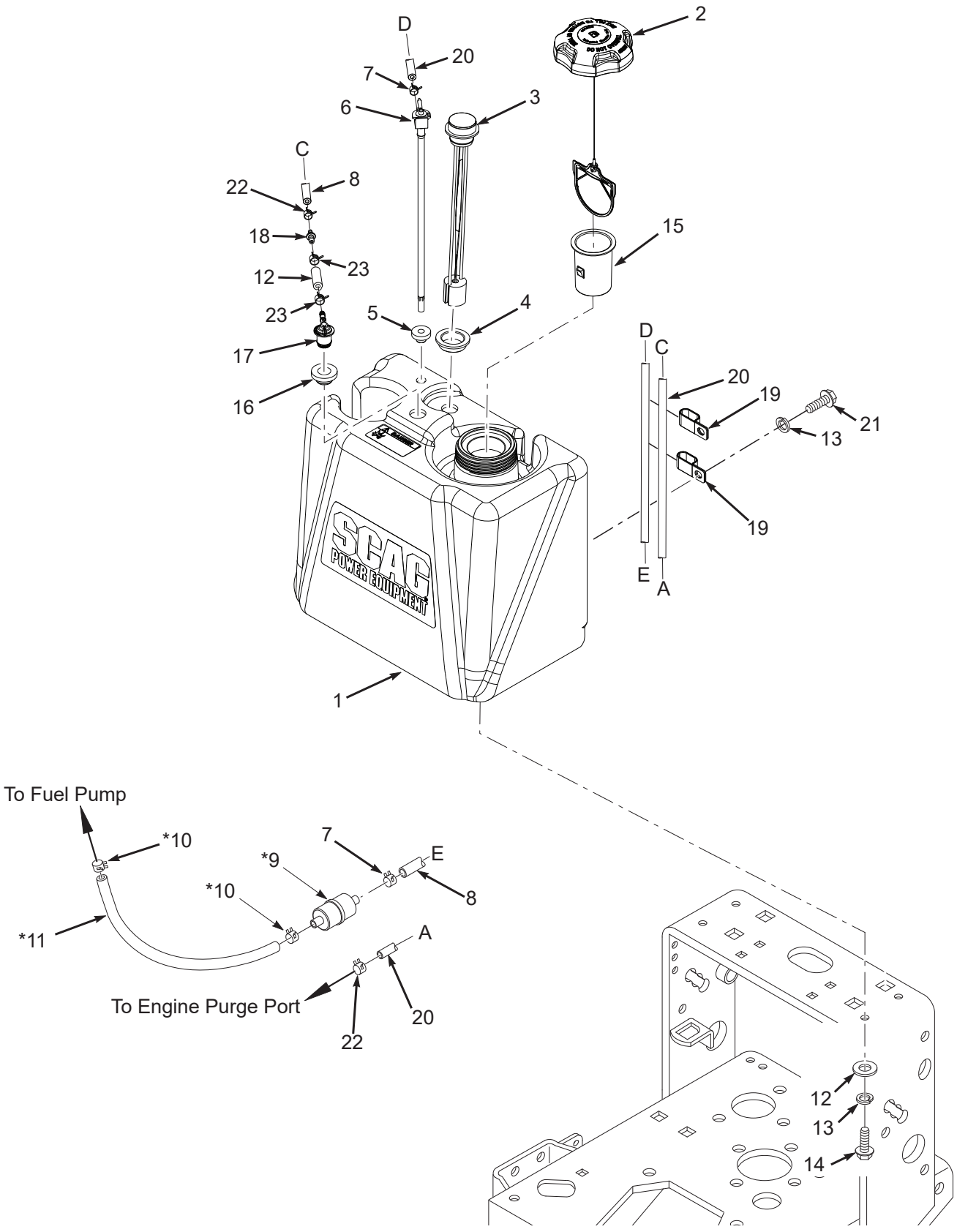

SWZ FUEL SYSTEM

Ref. No.	Part No.	Description
1	463282	Fuel Tank Assembly (incl. #3, 4, 5, 6, 16, 17)
2	484286	Fuel Cap w/ Tether
	484297	Fuel Cap w/Tethered - California Models Only (not shown)
3	484243	Fuel Gauge Assembly (incl. #4)
4	484242	Seal, Fuel Gauge
5	482571	Bushing, .56 Dia. Viton
6	486181	Valve, Fuel Shutoff w/Screen
7	48059-01	Clamp, Fuel Hose
8	483617	Fuel Hose, 1/4" ID (order by inch)
9	*	Fuel Filter
10	*	Clamp, Fuel Hose
11	*	Fuel Hose
12	484347	Hose, Vapor Recovery 1/4" (order by inch)
13	04030-03	Lockwasher, 5/16" Spring
14	04001-09	Bolt, Hex Head 5/16-18 x 1"
15	484279-01	Tube, Fuel Tank Insert - 4"
16	484285	Grommet, Viton,
17	484333	Fitting, Remote Vent
18	484343-01	Mender, 1/4 x 3/16 w/.02 Hole
19	48030-11	Clamp, 5/8" Double
20	484345	Hose, Vapor Recovery 3/16" (order by inch)
21	04001-08	Bolt, Hex Head 5/16-18 x 3/4"
22	48059-05	Clamp, Vapor Recovery Hose 3/16"
23	48059-02	Clamp, Fuel Hose 7/32" ID

* = Available through engine manufacturer only.

HYDRAULIC ASSEMBLY

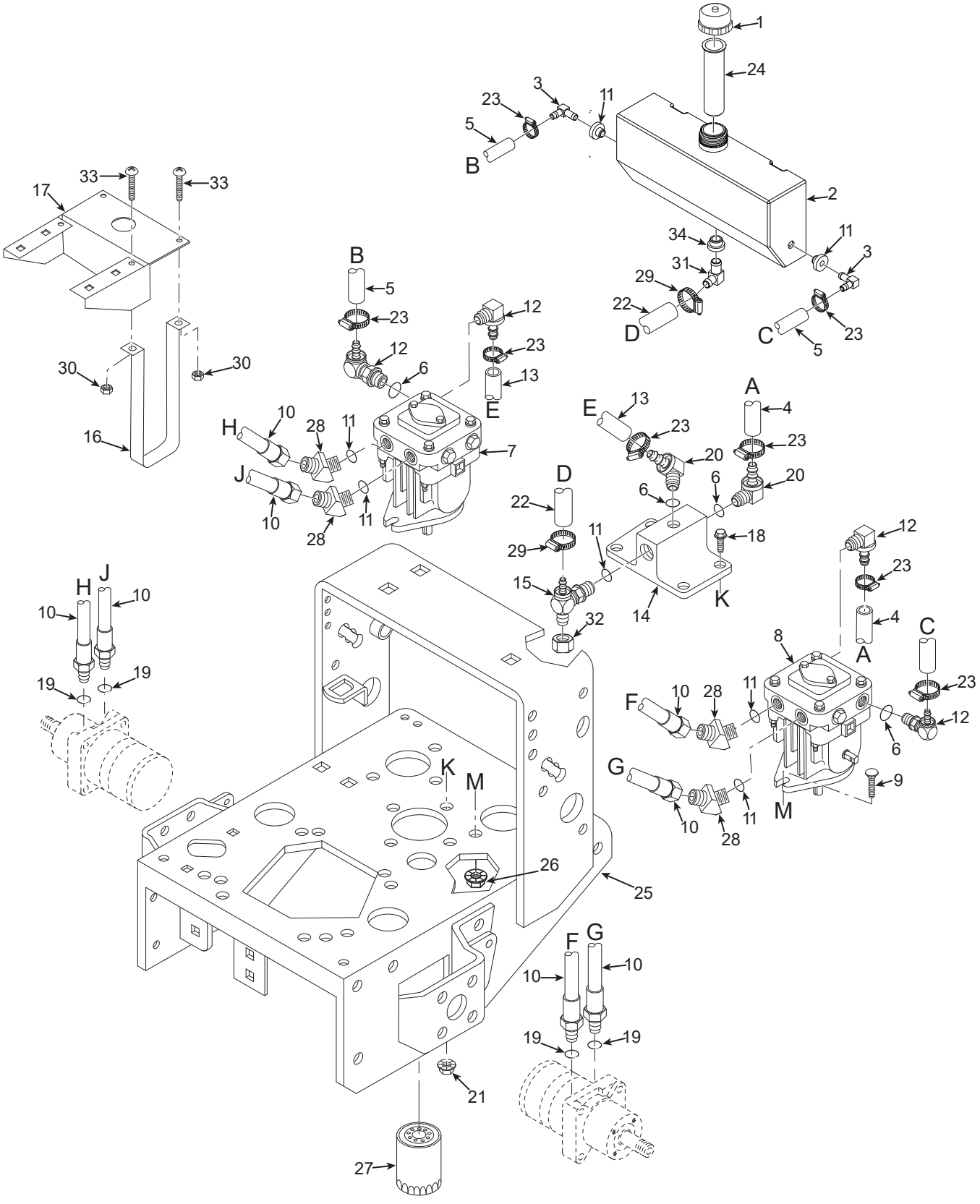

HYDRAULIC ASSEMBLY

Ref. No.	Part No.	Description
1	481164	Cap, Oil Reservoir
2	462773	Oil Reservoir (With Fittings)
3	482572	Fitting, 90 Degree - 3/8" Hose
4	48811	Hose, 3/8" ID - 10-1/4" Long (Order By The Inch)
5	48811	Hose, 3/8" ID - 7" Long (Order By The Inch)
6	48603-06	O-Ring
7	483097	Pump, PG-1JQQ-DY1X-XXXX (R.H.)
8	483098	Pump, PG-1GQQ-DY1X-XXXX (L.H.)
9	04003-11	Bolt, Carriage, 3/8-16 x 1.25"
10	481265	Hose, Pump to Wheel Motor
11	482571	Bushing, .56 Dia. Viton
12	482266-03	Elbow, 7/16-20 O-Ring x 3/8" Hose
13	48811	Hose, 3/8" ID - 11" Long (Order By The Inch)
14	482417	Oil Filter Base
15	482477	Tee, 3/8 O-Ring x JIC x 1/2" Hose
16	422794	Strap, Hydraulic Tank
17	422793	Bracket, Hydraulic Tank
18	04017-16	Capscrew, 5/16-18 x .75" Serr. Flange
19	48603-04	O-Ring
20	482266-01	Elbow, 9/16 O-Ring x 3/8" Hose
21	04019-03	Nut, 5/16-18 Serr. Flange
22	482305	Hose, Formed 1/2" ID
23	48136-13	Clamp, .69 max dia.
24	481507	Tube, Filler Neck
25	462287	Engine Deck (16" Wide) with Decals - Small Frame
	462288	Engine Deck (20" Wide) with Decals - Large Frame
26	04019-04	Nut, 3/8-16 Serr. Flange
27	48462-01	Oil Filter
28	48485-01	Elbow, 45 Deg.-3/4-16 JIC Male x Male 3/4-16 O-Ring
29	48136-05	Clamp, .87 max di.
30	04021-08	Nut, 1/4-20
31	482574	Fitting, 90 Degree - 1/2" Hose
32	48571-02	Cap, 3/4-16
33	04010-10	Screw, 1/4-20 x 2.0" Round Head Phillips
34	482573	Bushing, .78 Dia. Viton

HYDRAULIC PUMP ASSEMBLY

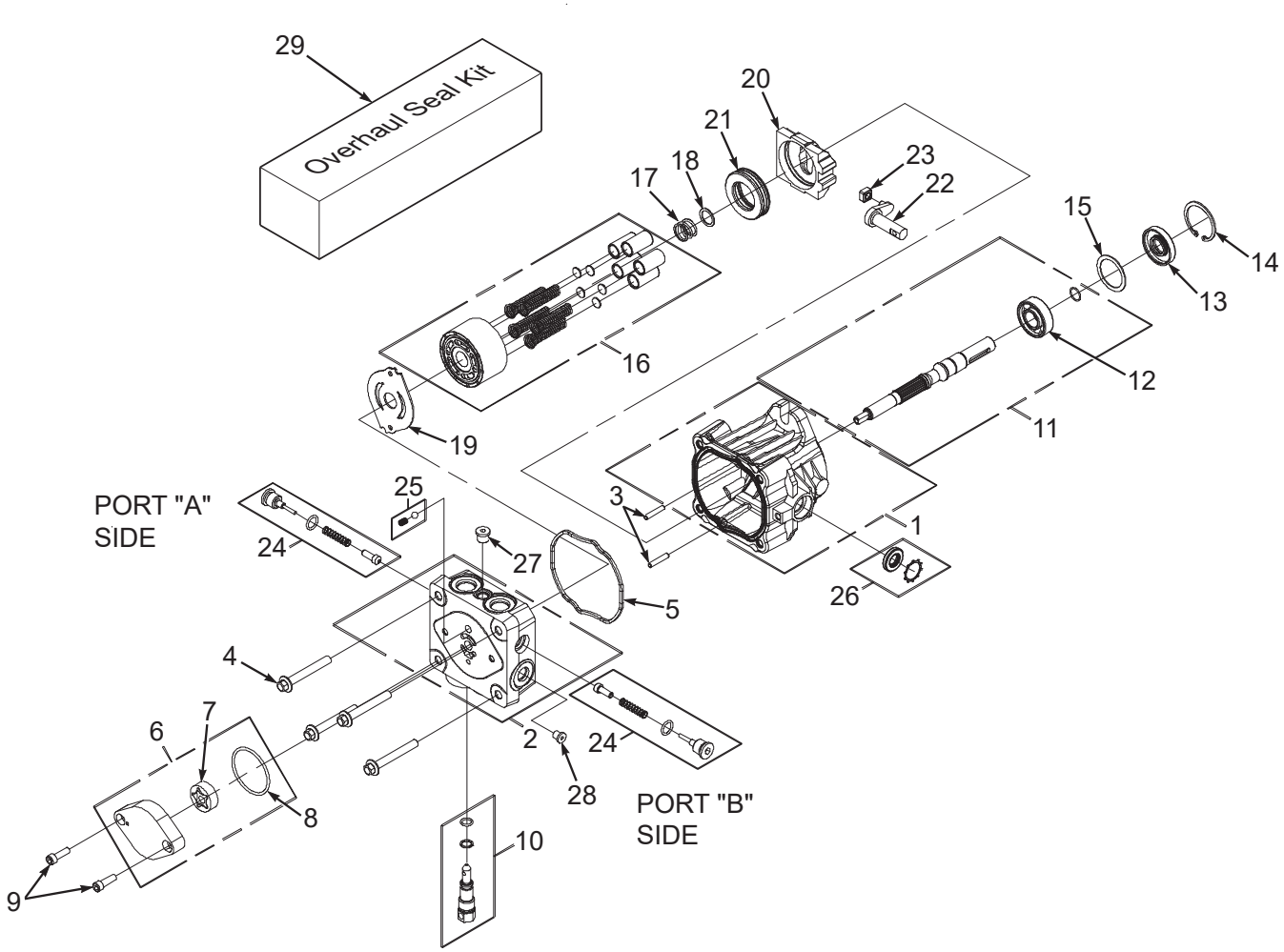

HYDRAULIC PUMP ASSEMBLY

Ref. No.	Part No.	Description
1	HG 70516	Housing Kit
2	HG 70517	End Cap Kit
3	HG 50641	Straight Headless Pin
4	HG 50969	Hex Flange Bolt, M8-1.25 x 60mm
5	HG 52629	Housing O-Ring
6	HG 2513027	Charge Pump Kit
7	HG 50273	Gerotor Assembly
8	HG 9004101-1340	O-Ring
9	HG 50095	Socket Head Screw, M6 x 1.0-20mm
10	HG 2513030	Bypass Valve Kit
11	HG 70521	Pumpshaft Kit
12	HG 50315	Ball Bearing, 17 x 40 x 12
13	HG 51161	Lip Seal
14	HG 50329	Retaining Ring
15	HG 50951	Spacer
16	HG 70331	Cylinder Block Kit
17	HG 2003014	Block Spring
18	HG 2003017	Block Thrust Washer
19	HG 51444	Valve Plate
20	HG 2003087	Swash Plate
21	HG 50551	Ball Thrust Bearing
22	HG 2003005	Trunnion Arm
23	HG 2000015	Slot Guide
24	HG 2510062	Check Valve Kit (.024” Orfice) port “A” on Left Hand Pump, port “B” on Right Hand Pump
25	HG 70403	Charge Relief Kit
26	HG 2513043	Trunnion Seal with Retainer
27	HG 9005110-4400	Straight Thread Plug
28	HG 50408	Straight Headless Pin
29	HG 70525	Overhaul Seal Kit

WIRE HARNESSES

ENGINE DECK WIRE HARNESS
PART NO. 484302

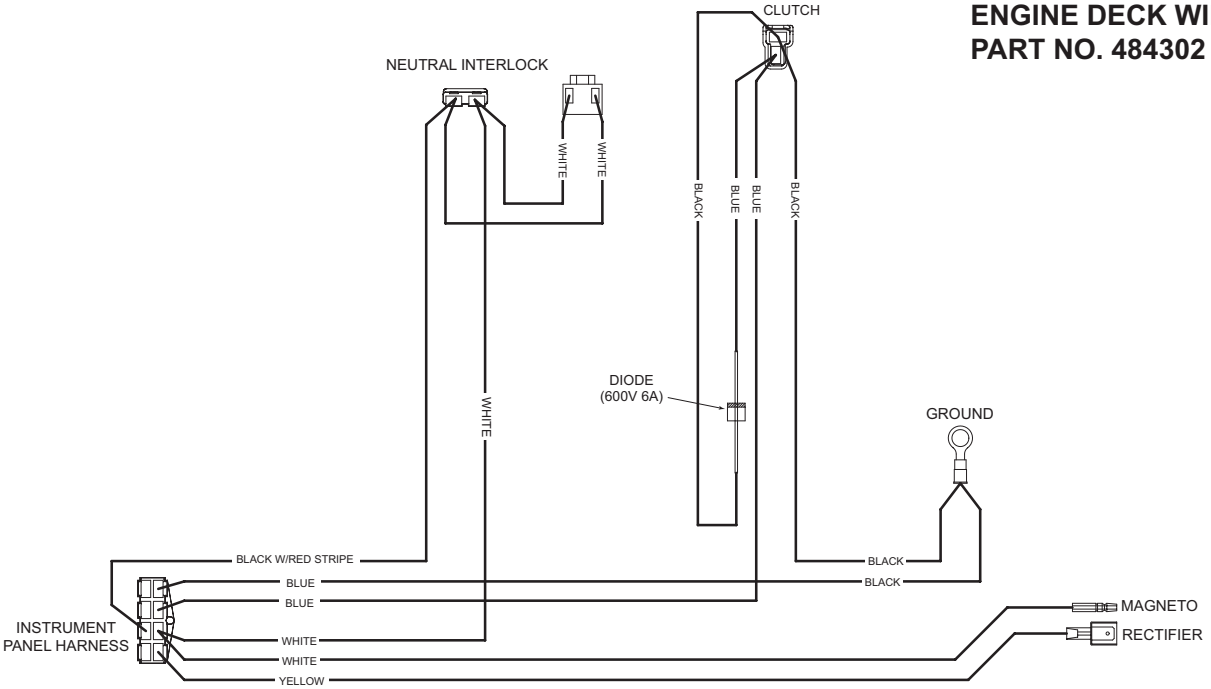

HANDLE WIRE HARNESS - MANUAL START
PART NO. 486119

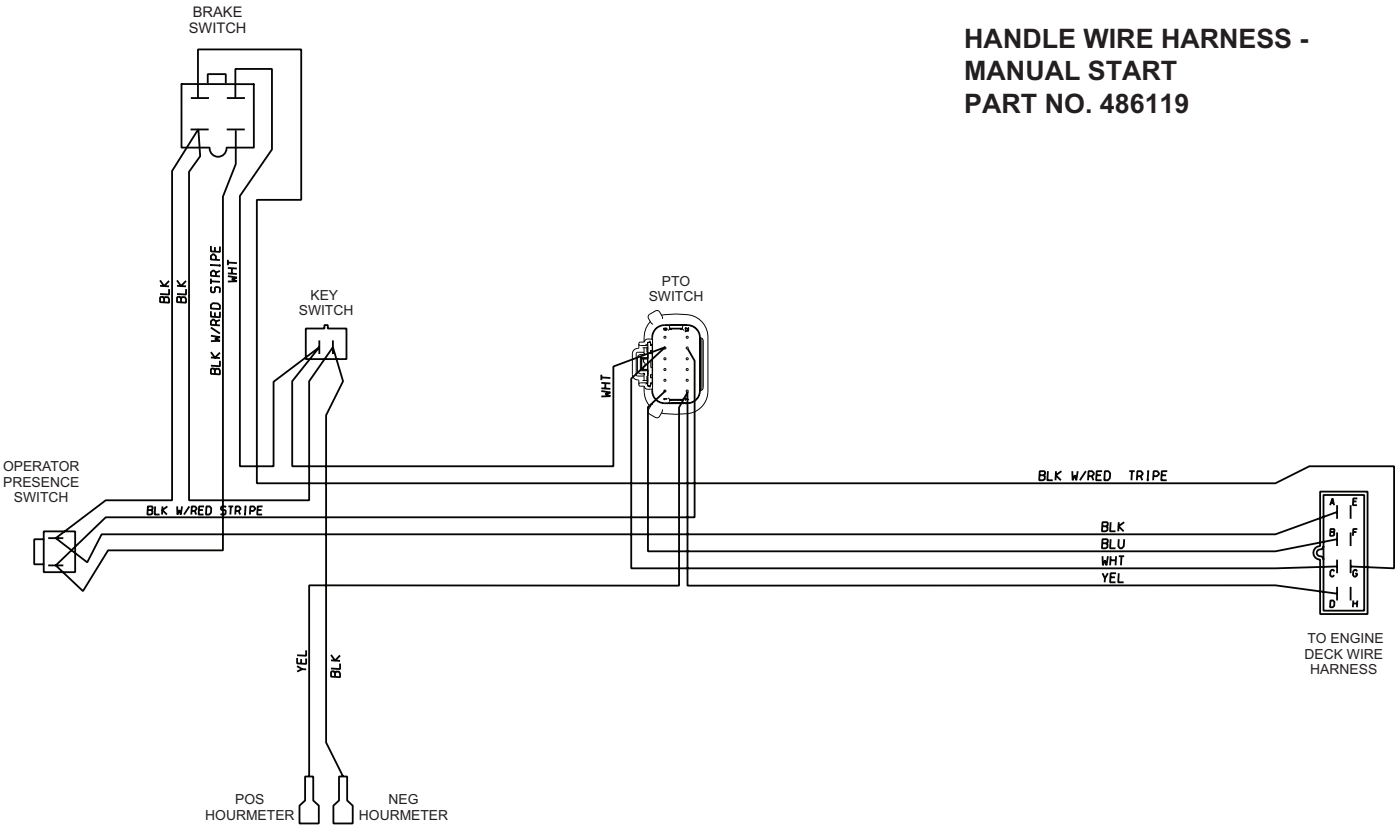

WIRE HARNESSES

ENGINE DECK WIRE HARNESS
ELECTRIC START
PART NO. 487329

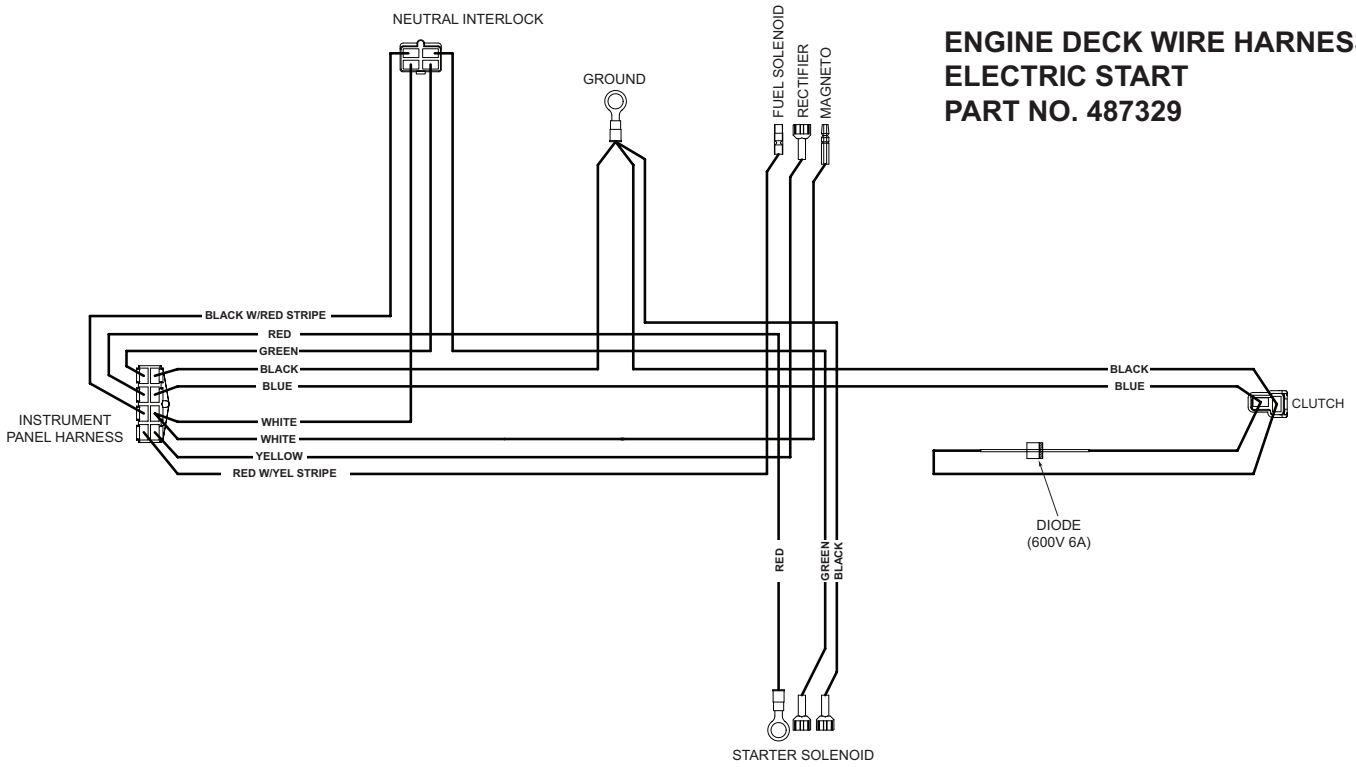

HANDLE WIRING HARNESS
KAWASAKI ELECTRIC START
PART NO. 486120

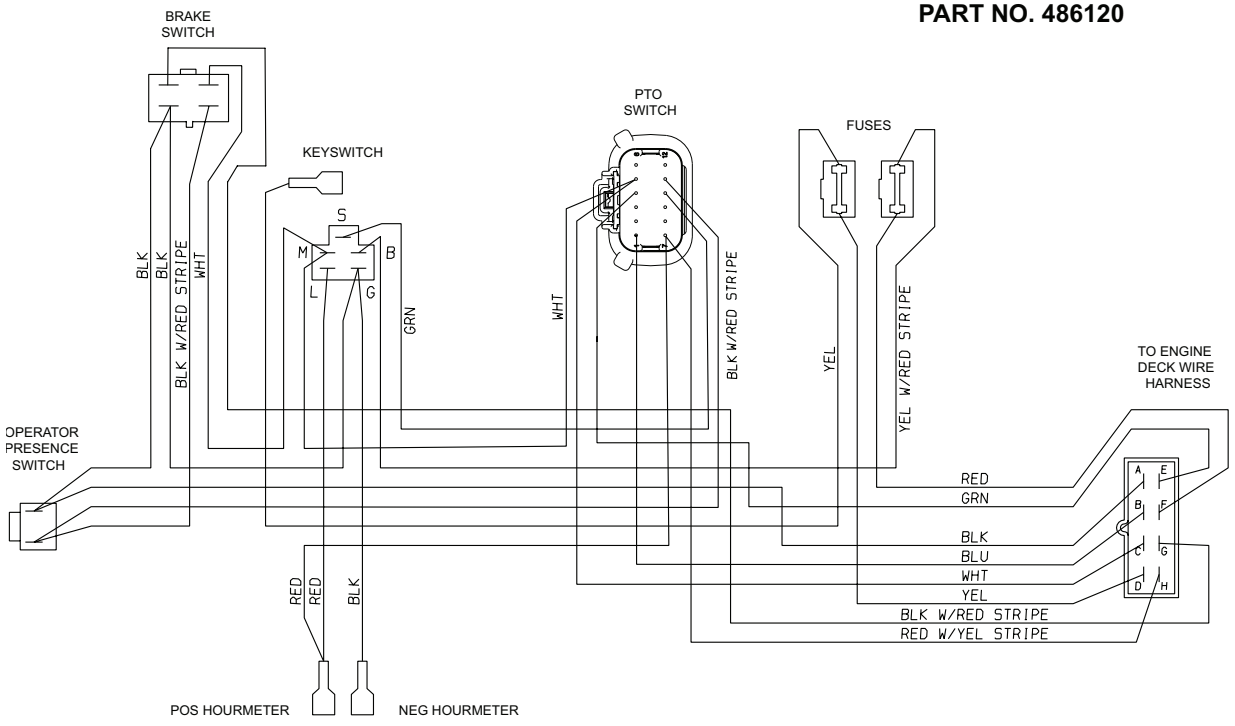

SWZ ELECTRICAL SCHEMATIC - RECOIL START

(shown with Key off, PTO Off, Speed Control Lever in Neutral, OPC Disengaged)

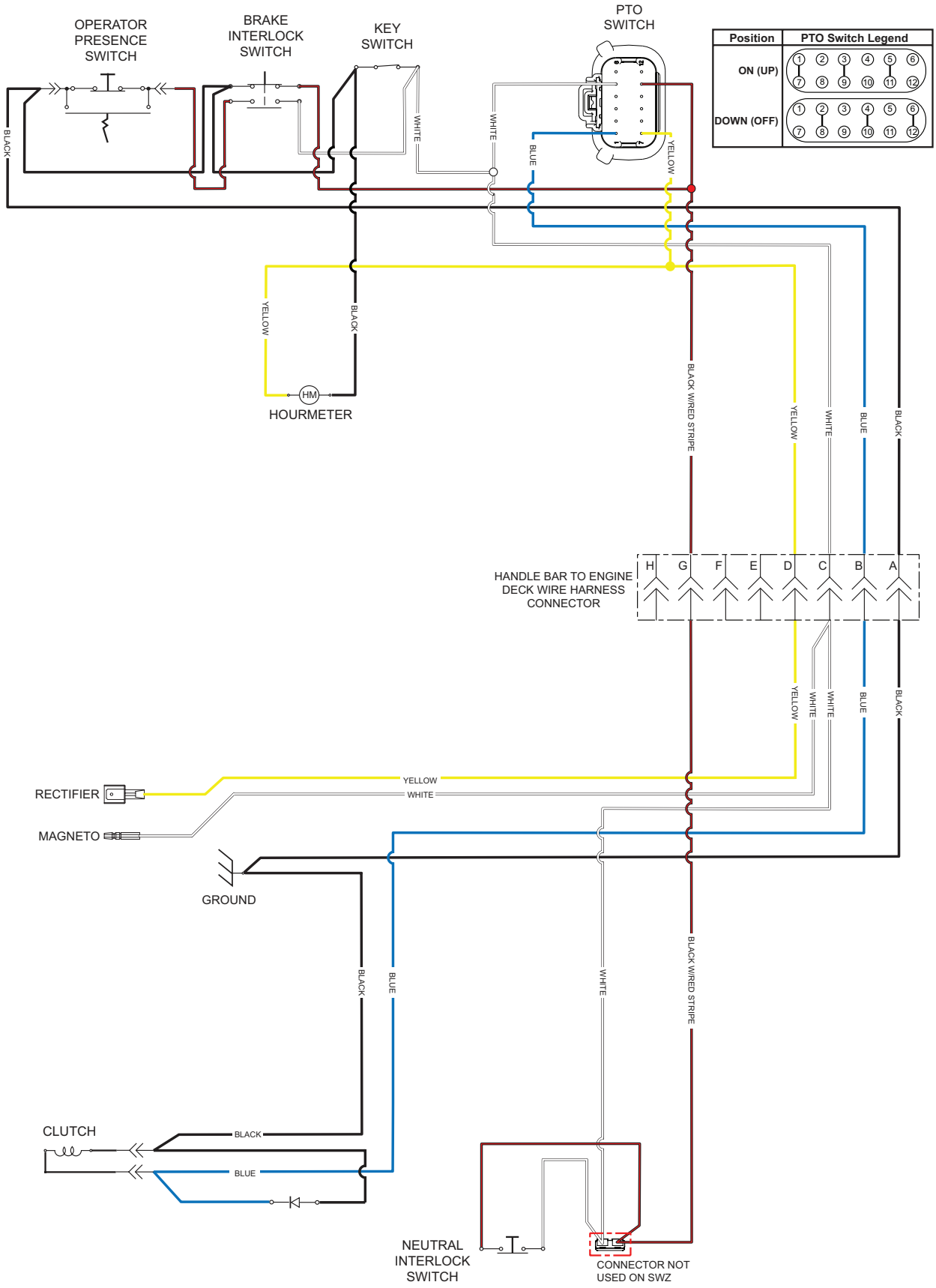

SWZ ELECTRICAL SCHEMATIC - ELECTRIC START

(shown with Key off, PTO Off, Speed Control Lever in Neutral, OPC Disengaged)

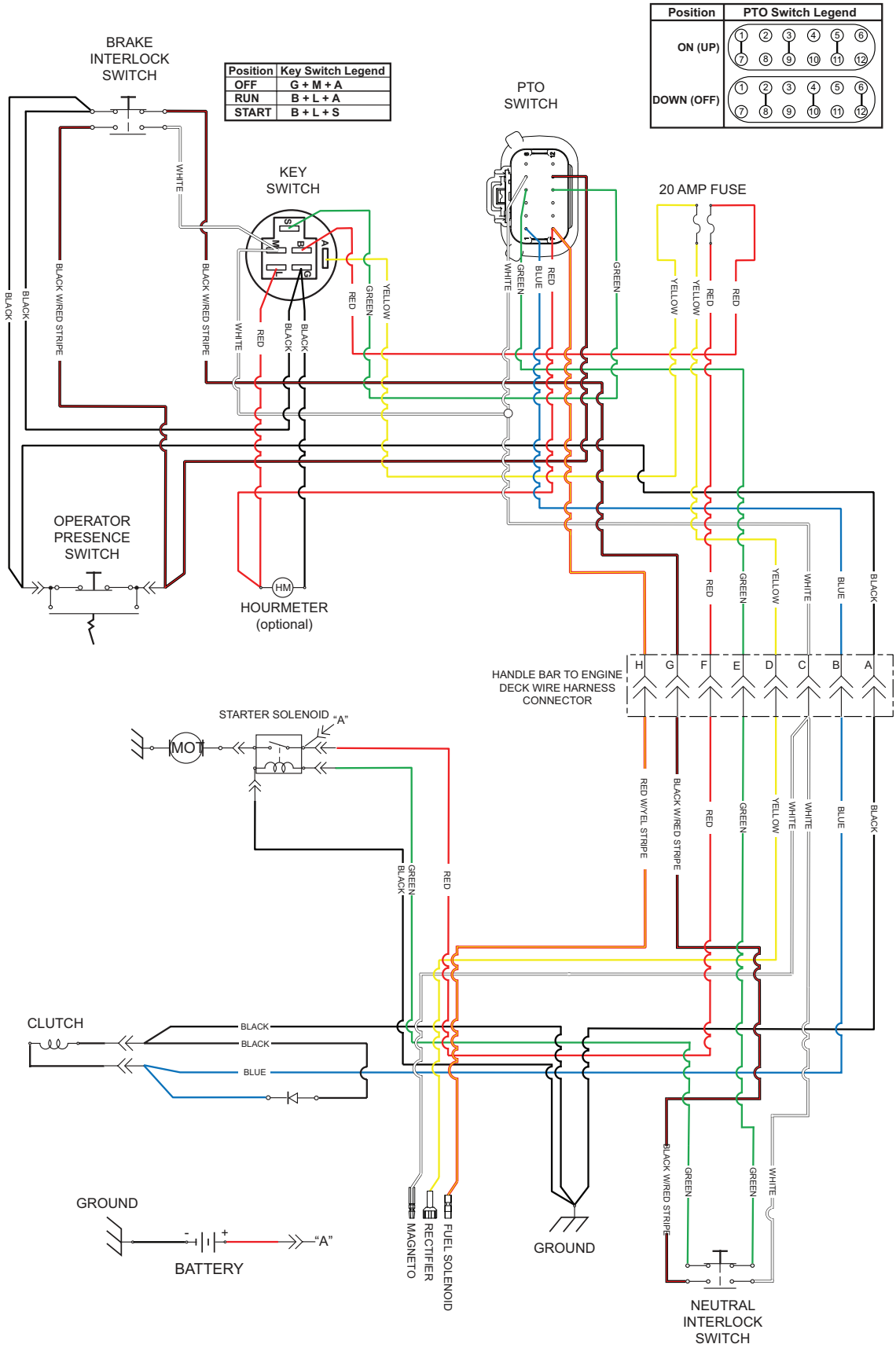

REPLACEMENT DECALS

WARNING

DO NOT OPERATE WITHOUT DISCHARGE CHUTE, MULCHING KIT, OR ENTIRE GRASS CATCHER INSTALLED

1

SCAG

2

DANGER

SPINNING BLADES

KEEP CLEAR

BLADE CONTACT & THROWN OBJECTS CAN INJURE

3

WARNING

ROTATING BLADES AND BELTS

* Keep hands, feet & clothing clear
* Keep all guards in place
* Shut off engine & disengage blade clutch before servicing
* Use caution in directing discharge
* Read instruction manual before operating

DO NOT OPERATE UNLESS GRASS CATCHER, MULCHING KIT OR DISCHARGE CHUTE IS INSTALLED

4

482816

CUTTING HEIGHT ADJUSTMENT

DECK MOUNTING HOLE POSITION

NUMBER OF CASTER SPACERS (BELOW SUPPORT)

		NUMBER OF SPACERS ABOVE CUTTER BLADES					
		0	1	2	3	4	5
TOP	0	-	-	2-3/8	2-1/8	1-7/8	1-5/8
MIDDLE	0	-	-	2-5/8	2-3/8	2-1/8	1-7/8
MIDDLE	1	-	-	2-3/4	2-1/2	2-1/4	2
BOTTOM	2	-	-	-	-	2-7/8	2-5/8
BOTTOM	3	-	4	3-3/4	3-1/2	3-1/4	3
BOTTOM	4	4-3/8	4-1/8	3-7/8	3-5/8	3-3/8	3-1/8

5

SCAG POWER EQUIPMENT
MAYVILLE
WEST BEND
BEAVER DAM, WI
USA
ISO 9001 Registered
METALCRAFT OF MAYVILLE

6

SCAG POWER EQUIPMENT

ON OFF

WARNING

BEFORE OPERATING

Read operator's manual
Solicite etiquetas en espanol a un distribuidor Scag
Make sure guards, shields & safety devices are in place & working
Clear area of children, bystanders & debris
Mow across face of slopes
Trained operators only

MOWER DECK
PULL OUT TO ENGAGE

PUSH IN TO DISENGAGE

486117

7

MOUNT RIDING ATTACHMENT HERE

WARNING

FALLING HAZARD
USE ONLY SCAG APPROVED RIDING ATTACHMENTS
SEE OPERATOR'S MANUAL

8

WARNING

INSTALL BELT COVER BEFORE OPERATING MACHINE

READ OPERATOR'S MANUAL

9

SCAG Zero-Turn

10

REPLACEMENT DECALS

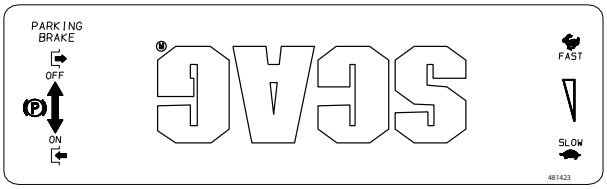

11

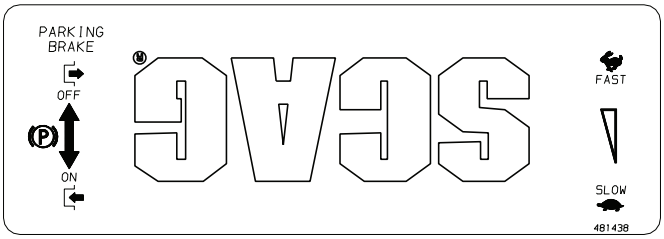

12



13

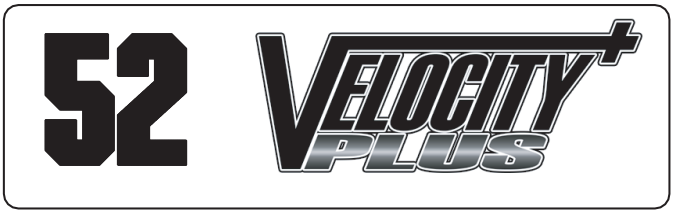

14



15

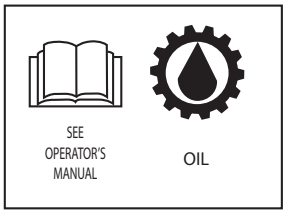

16



19

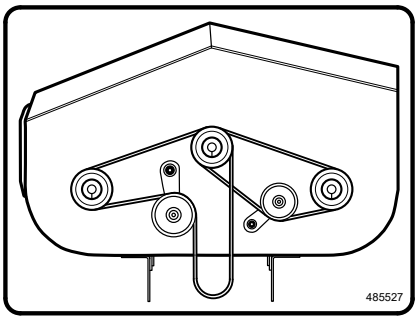

17

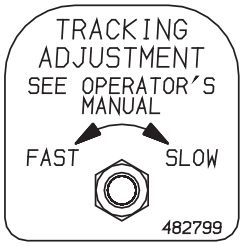

18

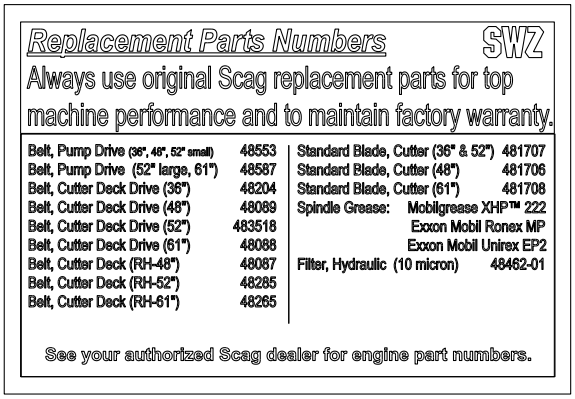

20



21

REPLACEMENT DECALS

Ref. No.	Part No.	Description
1	483405	Decal, Discharge Chute
2	48314	Decal, Scag Logo
3	483505	Decal, Danger-Spinning Blades
4	483406	Decal, Warning-Rotating Blades
5	482816	Decal, Height of Cut
6	485403	Decal, Metalcraft - USA
7	487212	Decal, Belt Cover
8	483404	Decal, Sulky Attachment
9	486117	Decal, Instrument Panel - Rear
10	481942	Decal, Scag Zero Turn
11	481423	Decal, Instrument Panel - Front (SWZ-18FS & SWZ-22FSE only)
12	481483	Decal, Instrument Panel - Front
13	482297	Decal, 36 Advantage
14	483199	Decal, 48 Velocity Plus
	483200	Decal, 52 Velocity Plus
	483201	Decal, 61 Velocity Plus
15	481971	Decal, Heavy Duty Commercial
16	481425	Decal, Oil
17	485526	Decal, Belt Routing - 36A
	485527	Decal, Belt Routing - 48V, 52V & 61V
18	482799	Decal, Tracking Adjustment
19	481124	Decal, Speed Control
20	485369	Decal, SWZ Replacement Parts
**	461986	Spanish Decal Kit, Walk-Behinds (Not Shown)
**	483900	Decal, Warning Spark Arrest (Not Shown) - California Models Only
21	486136	Decal. Scag Logo - Fuel Tank

LIMITED WARRANTY - COMMERCIAL EQUIPMENT

Any part of the Scag commercial mower manufactured by Scag Power Equipment and found, in the reasonable judgment of Scag, to be defective in materials or workmanship, will be repaired or replaced by an Authorized Scag Service Dealer without charge for parts and labor during the periods specified below. This warranty is limited to the original purchaser provided the product was purchased from an Authorized Scag Power Equipment Dealer and is not transferable. Proof of purchase will be required by the dealer to substantiate any warranty claims. All warranty work must be performed by an Authorized Scag Service Dealer.

This warranty is limited to the following specified periods from the date of the original retail purchase for defects in materials or workmanship:

- Wear items including drive belts, blades, hydraulic hoses and tires are warranted for ninety (90) days.
- Batteries are covered for ninety (90) days.
- Frame and structural components including oil reservoir and oil coolers are warranted for two (2) years (parts and labor) for commercial use or three (3) years / 500 hours (whichever comes first) (parts and labor) for non-commercial use.
- Cutter decks are warranted against cracking for a period of three (3) years. (parts and labor 1st and 2nd year; parts only 3rd year.) The repair or replacement of the cutter deck will be at the option of Scag Power Equipment. We reserve the right to request components for evaluation. This warranty does not cover any mower that has been subject to misuse, neglect, negligence, or accident, or that has been operated in any way contrary to the operating instructions as specified in the Operator's Manual.
- Engines and electric starters are covered by the engine manufacturer's warranty period.
- Major drive system components are warranted for two (2) years (parts and labor) for commercial use or three (3) year / 500 hour (whichever comes first) (parts and labor) for non-commercial use by Scag Power Equipment. (commercial and non-commercial warranty excludes fittings, hoses, drive belts). The repair or replacement of the hydraulic pump or hydraulic motor will be at the option of Scag Power Equipment. This warranty does not cover any mower that has been subject to misuse, neglect, negligence, or accident, or that has been operated in any way contrary to the operating instructions as specified in the Operator's Manual.
- Electric clutches have a Limited Warranty for two (2) years (parts and labor) for commercial use or three (3) year / 500 hours (whichever comes first) (parts and labor) for non-commercial use.
- Spindle assemblies have a Limited Warranty for three years (parts and labor 1st year and 2nd; parts only 3rd year).
- Any Scag product used for rental purposes is covered by a 90 day warranty.

The Scag mower, including any defective part must be returned to an Authorized Scag Service Dealer within the warranty period. The expense of delivering the mower to the dealer for warranty work and the expense of returning it to the owner after repair will be paid for by the owner. Scag's responsibility is limited to making the required repairs and no claim of breach of warranty shall be cause for cancellation or rescission of the contract of sale of any Scag mower. "Non-Commercial" use is defined as a single property owner, where the single property is the residence of the owner of the mower. If the mower is cutting more than the owners single property, it is deemed commercial use and the "non-commercial" warranty does not apply. Scag Power Equipment reserves the right to deny and / or void the non-commercial warranty if it believes it to be in commercial use.

This warranty does not cover any mower that has been subject to misuse, neglect, negligence, or accident, or that has been operated in any way contrary to the operating instructions as specified in the Operator's Manual. The warranty does not apply to any damage to the mower that is the result of improper maintenance, or to any mower or parts that have not been assembled or installed as specified in the Operator's Manual and Assembly Manual. The warranty does not cover any mower that has been altered or modified, changing performance or durability. In addition, the warranty does not extend to repairs made necessary by normal wear, or by the use of parts or accessories which, in the reasonable judgment of Scag, are either incompatible with the Scag mower or adversely affect its operation, performance or durability.

Scag Power Equipment reserves the right to change or improve the design of any mower without assuming any obligation to modify any mower previously manufactured. All other implied warranties are limited in duration to the two (2) year for commercial use, three (3) years / 500 hour for non-commercial use or ninety (90) days for mowers used for rental purpose. Accordingly, any such implied warranties including merchantability, fitness for a particular purpose, or otherwise, are disclaimed in their entirety after the expiration of the appropriate two year, three year / 500 hour or ninety day warranty period. Scag's obligation under this warranty is strictly and exclusively limited to the repair or replacement of defective parts and Scag does not assume or authorize anyone to assume for them any other obligation. Some states do not allow limitations on how long an implied warranty lasts, so the above limitation may not apply to you.

Scag assumes no responsibility for incidental, consequential or other damages including, but not limited to, expense for gasoline, expense of delivering the mower to an Authorized Scag Service Dealer and expense of returning it to the owner, mechanic's travel time, telephone or telegram charges, rental of a like product during the time warranty repairs are being performed, travel, loss or damage to personal property, loss of revenue, loss of use of the mower, loss of time or inconvenience. Some states do not allow the exclusion or limitation of incidental or consequential damages, so the above limitation or exclusion may not apply to you. This warranty gives you specific legal rights, and you may also have other rights which vary from state to state.



Scag Power Equipment Headquarters
1000 Metalcraft Drive
Mayville, Wisconsin 53050
1.920.644.8100

Mailing Information
PO Box 152
Mayville, Wisconsin 53050

© 2027
Scag Power Equipment
Division of Metalcraft of Mayville, Inc.