SCAG POWER EQUIPMENT

ILLUSTRATED PARTS MANUAL

SW
Walk-Behind



© 2027
Scag Power Equipment
Division of Metalcraft of Mayville, Inc.

PART NO. 06439
PRINTED 10/2026
PRINTED IN USA

Congratulations on owning a Scag mower! This manual contains the illustrated parts list for your machine. Reading this manual can provide you with assistance in locating and identifying components during maintenance and repair procedures. Please read all the information enclosed in this manual before attempting to maintain or repair your machine.

The QR code on the front cover of this manual can be scanned with your mobile device to access manuals, parts lists, and other product information on the official Scag website.

This manual covers the illustrated parts list for:		
SW-32-14FS	**with a serial number of**	**036D00001 to 036D99999**
SW-36A-14FS	**with a serial number of**	**037D00001 to 037D99999**
SW-48V-14FS	**with a serial number of**	**038D00001 to 038D99999**
SW-52V-15FS	**with a serial number of**	**039D00001 to 039D99999**
Always use the entire serial number listed on the serial number tag when referring to this product.		

Model Number:	**Serial Number:**

Please use the table provided above to record the model number and serial number located on your machine for future reference.

⚠ WARNING

YOUR MACHINE IS ONLY AS SAFE AS THE OPERATOR. HAZARD CONTROL AND ACCIDENT PREVENTION ARE DEPENDENT UPON THE AWARENESS, CONCERN, PRUDENCE, AND PROPER TRAINING OF THE PERSONNEL INVOLVED IN THE OPERATION, TRANSPORT, MAINTENANCE, AND STORAGE OF THE EQUIPMENT.

- **Carefully read and understand the safety and operating instructions described in this manual. Always keep a copy of this manual with the machine.**
- **Ensure every operator is properly trained and thoroughly familiar with all controls and procedures before operating the machine.**
- **Always follow OSHA-approved operating procedures when operating the machine.**
- **Keep all shields, guards, and plates in place when operating the machine. Do not remove the grass discharge chute while the machine is running.**
- **Stay two machine widths away from slopes, drop-offs, ditches, embankments, retaining walls, water, or other obstacles.**
- **Do not mow on wet grass. Wet grass reduces traction and steering control.**
- **Keep hands, feet, and clothing away from moving parts at all times.**
- **Do not carry passengers on the machine.**
- **Do not operate the machine when children or bystanders are present.**
- **If a mechanism becomes clogged during operation, stop the engine before cleaning.**
- **Before performing any maintenance or service, stop the machine and remove the ignition key.**

⚠ WARNING

CALIFORNIA PROPOSITION 65

The engine exhaust produced by this machine contains chemicals known to the State of California to cause cancer, birth defects, or other reproductive harm.

Battery posts, terminals, and related accessories for this machine contain lead and lead compounds, chemicals known to the State of California to cause cancer, birth defects, or other reproductive harm. Wash hands after handling components.

The use of this machine may expose the operator to chemicals known to the State of California to cause cancer, birth defects, or other reproductive harm.

NOTES

PAGE LEFT INTENTIONALLY BLANK

Table of Contents

SECTION 1 - ILLUSTRATED PARTS LIST 1

SCAG APPROVED ATTACHMENTS AND ACCESSORIES. 1
32" & 36A CUTTER DECKS 3
48V & 52V CUTTER DECKS 5
CASTER ASSEMBLY 7
ENGINE DECK 9
HANDLE ASSEMBLY 11
SW FUEL SYSTEM 13
INSTRUMENT PANEL 15
PEERLESS TRANSMISSION 700-070 17
WIRE HARNESSES 18
SW ELECTRICAL SCHEMATIC - RECOIL START 19
REPLACEMENT DECALS AND INFORMATION PLATES 21

LIMITED WARRANTY - COMMERCIAL EQUIPMENT ..... INSIDE BACK COVER

NOTES

PAGE LEFT INTENTIONALLY BLANK

ILLUSTRATED PARTS LIST

8.1 SCAG APPROVED ATTACHMENTS AND ACCESSORIES.

Attachments and accessories manufactured by companies other than Scag Power Equipment are not approved for use on this machine.

Scag approved attachments and accessories:

Accessories	P/N
Grass Catchers	
GC-F4 (fabric grass catcher)	926Z
Mulching Accessories	
Mulch Plate (36)	927U
Mulch Plate (48)	927V
Mulch Plate (52)	927W
Hurricane Mulch Kit (36)	927M
Hurricane Plus Mulch Kit (48)	927E
Hurricane Plus Mulch Kit (52)	927P
Miscellaneous	
Blade Buddy	9212
Turbo Baffle (48/52)	424677

Accessories	P/N
Scag Premium Lubricants	
Chassis Grease	486257
Spindle Grease	486258
Hydraulic System Oil (1 gal)	486254
Hydraulic System Oil (1 qt)	486255

32" & 36A CUTTER DECKS

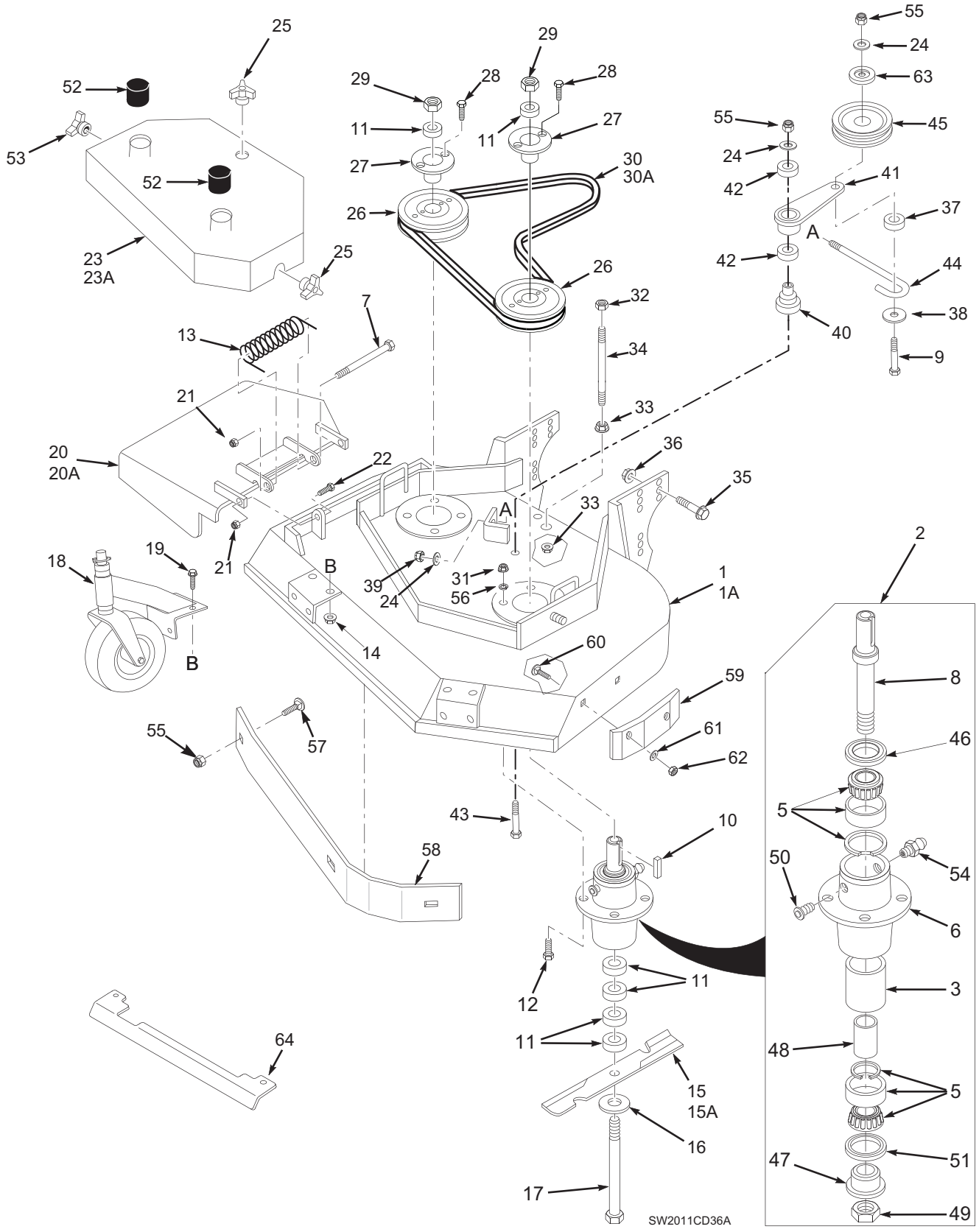

32" & 36A CUTTER DECKS

Ref. No.	Part No.	Description	32	36
1	461847	Cutter Deck w/Decals	x	
1A	461848	Cutter Deck w/Decals		x
2	461663	Cutter Spindle Assembly	x	x
3	43312	Spacer, Outside	x	x
5	481022	Bearing, Tapered	x	x
6	43644	Spindle Housing	x	x
7	04001-154	Bolt, 5/16-18 x 4-3/4"	x	x
8	43589	Spindle Shaft	x	x
9	04001-51	Bolt, 3/8-16 x 3-3/4" Hex Head	x	x
10	04063-08	Key, 1/4 x 1/4 x 2"	x	x
11	43592	Spacer, Cutter Blade - Small	x	x
12	04001-175	Bolt, 5/16-18 x 1-1/2" Hex Head Grade 8	x	x
13	482245	Spring, Chute Return	x	x
14	04019-03	Nut 5/16-18 Serrated Flange	x	x
15	481706	Cutter Blade, 16-1/2"	x	
	481707	Cutter Blade, 18"		x
15A	481710	Cutter Blade 16-1/2 Hi-Lift	x	
	481711	Cutter Blade, 18 Hi-Lift		x
16	04043-06	Flatwasher, 5/8 W	x	x
17	04001-41	Hex Hd. Bolt, 5/8-11 x 9-1/2"	x	x
18	461023	Caster Assembly	x	x
19	04017-16	Cpscrw,5/16-18 x 3/4" Ser. Flg. Hex Head	x	x
20	461355	Discharge Chute	x	
20A	461356	Discharge Chute		x
	*462469	CA Discharge Chute		x
	*425872	Turbo Baffle		x
21	04021-10	Hex Nut, 5/16-18 Elastic Stop	x	x
22	04001-09	Hex Hd Bolt, 5/16-18 x 1"	x	x
23	462392	Belt Cover Assy (Incl. Decal)	x	
23A	462393	Belt Cover Assy (Incl. Decal)		x
24	04043-04	Flat Washer, 3/8" Special	x	x
25	04029-03	Wing Nut, 3/8-16	x	x
26	482744	Pulley	x	x
27	48926	Tapered Hub	x	x
28	04001-172	Hex Hd. Bolt, 1/4-20 x 1"	x	x
29	04020-09	Hex Nut, 5/8-11	x	x
30	48278	Belt, Blade Drive	x	
30A	48204	Belt, Blade Drive		x
31	04021-22	Elastic Stop Nut, 5/16-18 Grade 8	x	x
32	04021-05	Hex Nut, 3/8-16 Center Locknut	x	x
33	04019-04	Nut, 3/8-16 Serrated Flange	x	x
34	04004-02	Support, Belt Cover	x	x
35	04017-37	Cpscrw, 1/2-13 x 1-1/4" Ser. Flg. HH	x	x
36	04117-04	Nut, 1/2-13 Flange El. Stop	x	x
37	43277	Spacer, J-Hook	x	x
38	04041-12	Flatwasher, 3/8 x 1-1/2 x 16 GA	x	x
39	04021-09	Elastic Stop Nut, 3/8-16	x	x
40	43681	Idler Pivot	x	x
41	461841	Idler Arm Assy. (Inc. 42)	x	x
42	48224	Bearing	x	x
43	04001-62	Cpscrw, 3/8-16 x 3-1/4" Hex Head	x	x
44	44078	J-Hook	x	x
45	483215	Idler Pulley, Belt Clutch	x	x
46	481024	Seal, Cutter Spindle	x	x
47	43297	Spindle Bushing	x	x
48	43296	Spacer, Inside	x	x
49	481035	Nut,1.06-18	x	x
50	48677	Relief Fitting, Cutter Spindle	x	x
51	481025	Seal, Cutter Spindle	x	x
52	484368	Spindle Shield	x	x
53	04029-04	Wing Nut, 3/8-16 (Small) RH side	x	x
54	48114-04	Grease Fitting	x	x
55	04021-09	Nut, Hex Elastic Stop 3/8-16	x	x
56	04030-03	Lock Washer, 5/16"	x	x
57	04003-23	Bolt, Carriage 3/8-16 x 1"	x	x
58	423783	Baffle Weldment		x
59	483174	Pad, Deck Wear	x	x
60	04003-12	Bolt, Carriage 5/16-18 x 3/4"	x	x
61	04040-04	Flatwasher, 5/16"	x	x
62	04021-04	Hex Nut, 5/16-18 Center Locknut	x	x
63	424367	Dust Shield	x	x
64	424661	Heatshield	x	x

* = California Models Only (not shown)

48V & 52V CUTTER DECKS

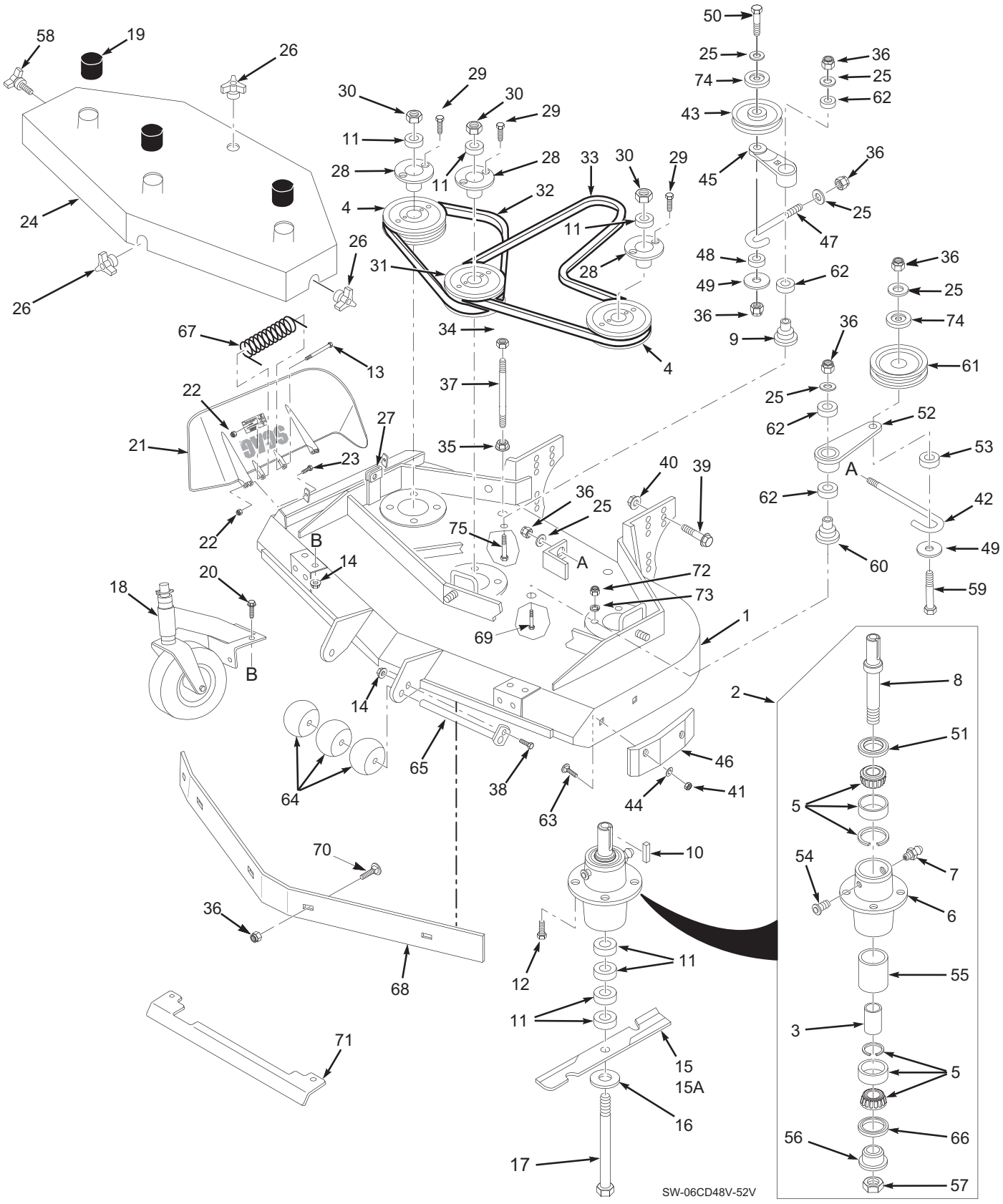

48V & 52V CUTTER DECKS

Ref. No.	Part No.	Description	48	52
1	461852	Cutter Deck w/Decals	x	
	461855	Cutter Deck w/Decals		x
2	461663	Spindle Assembly	x	x
3	43296	Spacer, Inside	x	x
4	482744	Pulley	x	x
5	481022	Tapered Bearing	x	x
6	43644	Spindle Housing	x	x
7	48114-04	Grease Fitting Str. 5/16"	x	x
8	43589	Spindle Shaft	x	x
9	43682	Idler Pivot	x	x
10	04063-08	Key, 1/4 x 1/4 x 2"	x	x
11	43592	Spacer, Cutter Blade - Small	x	x
12	04001-175	Bolt, 5/16-18 x 1-1/2" Hex Head Gr. 8	x	x
13	04001-154	Bolt, 5/16-18 x 4-3/4" Hex Head	x	x
14	04019-03	Serr. Flange Nut, 5/16-18	x	x
15	481706	Cutter Blade 16-1/2"	x	
	481707	Cutter Blade 18"		x
15A	481710	Cutter Blade 16-1/2 Hi-Lift	x	
	481711	Cutter Blade 18 Hi-Lift		x
16	04043-06	Flatwasher,5/8" (.688 x 1.75 x .134)	x	x
17	04001-41	Hex Head Bolt, 5/8-11 x 9-1/2"	x	x
18	461023	Caster Assembly	x	x
19	484368	Cap, Spindle	x	x
20	04017-16	Capscrew, 5/16-18 x 3/4"	x	x
21	461844	Discharge Chute 48V	x	
	*462473	CA Discharge Chute, 48V	x	
	*425619	Turbo Baffle, 48V	x	
	461845	Discharge Chute 52V		x
	*462475	CA Discharge Chute, 52V		x
	*424211	Turbo Baffle, 52V		x
22	04021-10	Nut, 5/16-18 Elastic Elastic Stop	x	x
23	04001-11	Bolt, 5/16-18 x 1-1/2" Hex Head	x	x
24	462394	Belt Cover (Incl. decals)	x	
	462395	Belt Cover (Incl. decals)	x	x
25	04043-04	Flat Washer, 3/8" Special	x	x
26	04029-03	Wing Nut, 3/8-16 (Large)	x	x
27	04110-03	U-Nut, 3/8-16	x	x
28	48926	Tapered Hub		x
29	04001-172	Bolt, 1/4-20 x 1" Hex Head Grade 8	x	x
30	04020-09	Nut, 5/8-11 Hex	x	x
31	482748	Pulley, Double		x
32	48087	Belt, RH Blade Drive	x	
	48285	Belt, RH Blade Drive		x
33	48089	Belt, Blade Drive	x	
	483518	Belt, Blade Drive		x
34	04021-05	Nut, 3/8-16, Nut Centerlock	x	x
35	04019-04	Nut, 3/8-16, Serrated Flange	x	x
36	04021-09	Nut, 3/8-16 Elastic Stop	x	x
37	04004-02	Bolt, 5/16-18 x 1" Hex Head	x	x
38	04001-09	Bolt, 5/16-18 x 1" Hex Head		x
39	04017-37	Cpscrw, 1/2-13 x 1-1/4" Ser. Flg. HH	x	x
40	04117-04	Nut, 1/2-13 Flange El. Stop	x	x
41	04021-04	Hex Nut, 5/16-18 Center Locknut	x	x
42	44078	J-Hook, 48V	x	
	43028	J-Hook, 52V		x
43	48181	Idler Pulley, “V” Groove	x	x
44	04040-04	Flatwasher, 5/16"	x	x
45	461091	Idler Arm Assy. (Incl. 62)	x	x
46	483176	Pad, Deck Wear	x	x
47	43028	J-Rod, Idler Pulley	x	x
48	43077	Spacer, J-Rod	x	x
49	04041-12	Washer, 3/8 x 1-1/2 x 16 ga.	x	x
50	04001-31	Bolt, 3/8-16 x 2-1/2" Hex Head	x	x
51	481024	Seal, Cutter Spindle	x	x
52	461841	Idler Arm Assy (Includes 62)	x	x
53	43277	Spacer, J-Rod	x	x
54	48677	Reiief Fitting, Cutter Spindle	x	x
55	43312	Spacer, Outside, Cutter Spindle	x	x
56	43297	Spindle Bushing	x	x
57	481035	Nut, Cutter Spindle	x	x
58	481625-01	Knob, w/stud	x	x
59	04001-51	Bolt, 3/8-16 x 3-3/4" Hex Head	x	x
60	43681	Idler Pivot	x	x
61	483215	Idler Pulley, Belt Clutch	x	x
62	48224	Bearing	x	x
63	04003-12	Bolt, Carriage 5/16-18 x 3/4"	x	x
64	482295	Guide Roller	x	x
65	45944	Roller Shaft	x	x
66	481025	Seal, Cutter Spindle	x	x
67	483378	Spring, Chute Return	x	x
68	424839	Baffle Weldment 48V	x	
	424840	Baffle Weldment 52V		x
69	04001-62	Bolt, 3/8-16 x 3-1/4" Hex Head	x	x
70	04003-23	Bolt, Carriage 3/8-16 x 1"	x	x
71	424661	Heatshield	x	x
72	04021-22	Nut, Hex Lock 5/16-18	x	x
73	04030-03	Lock Washer 5/16"	x	x
74	424367	Dust Shield	x	x
75	04001-22	Bolt, 3/8-16 x 2-3/4" Hex Head	x	x

* = California Models Only (not shown)

CASTER ASSEMBLY

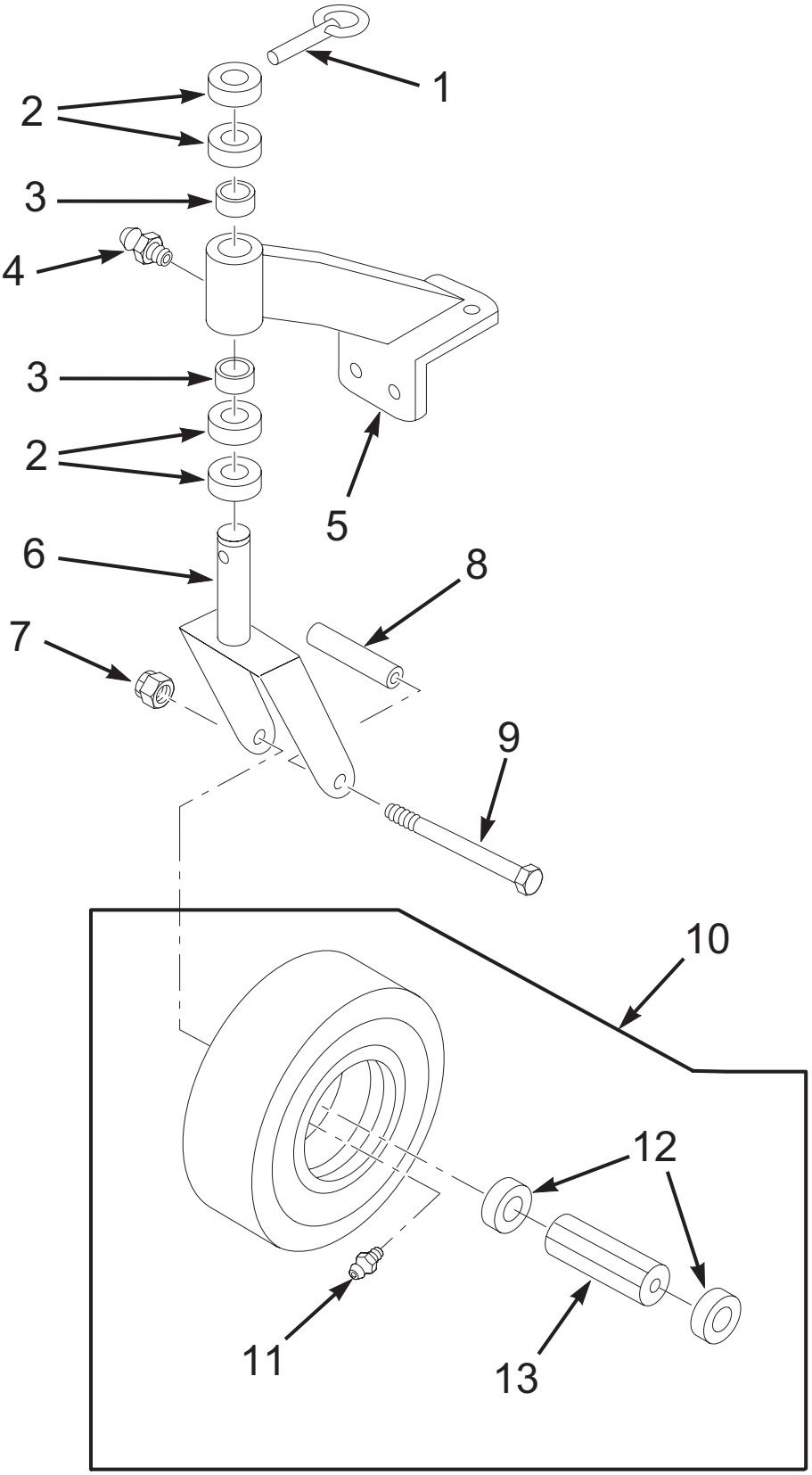

CASTER ASSEMBLY

Ref. No.	Part No.	Description
1	04066-01	Quick Pin
2	43037-01	Spacer, Spacer Yoke, 1/2" Long
3	48100-01	Bronze Bearing
4	48114-04	Greasing Fitting
5	45101	Support Assembly
6	45006	Caster Yoke
7	04021-07	Nut, Elastic Stop 1/2-13
8	43022	Sleeve, Caster Wheel Bearing
9	04001-37	Bolt, Hex Head 1/2-13 x 5-1/2"
10	483047	Caster Wheel Assy. (Incl. #11, #12, #13)
11	48114-03	Grease Fitting, 45 Degree 1/4-28
12	481770	Retainer, Caster Wheel Bearing
13	481769	Roller Bearing, Caster Wheel

ENGINE DECK

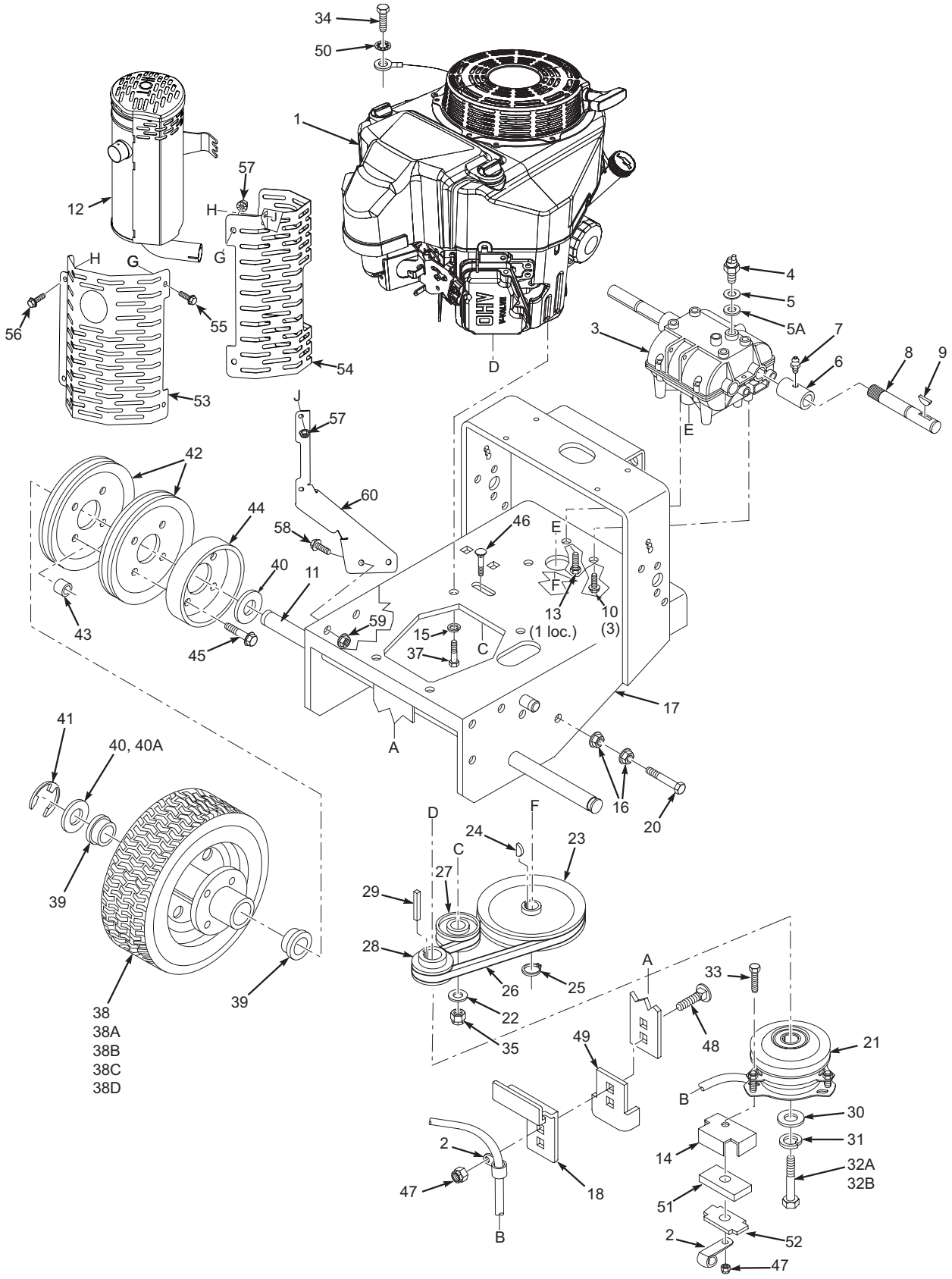
34
50
1
12
57
H
J
G
56
55
54
53
4
5
5A
3
7
6
8
9
D
E
J
57
60
58
42
44
40
11
43
45
59
46
E
F
13
10
(3)
15
37
C
(1 loc.)
17
A
16
20
41
40, 40A
39
38
38A
38B
38C
38D
24
23
27
29
28
26
25
22
35
F
D
C
A
33
48
49
21
B
30
31
14
32A
32B
51
2
52
47
18

ENGINE DECK

Ref. No.	Part No.	Description
1	*	Engine, Kawasaki 14FS (FS481V-FS18)
	*	Engine, Kawasaki 15FS (FS541V-FS19)
2	48030-09	Cable Clamp
3	481580	Transmission, 5-speed (Peerless 700-070, 9 tooth spline)
4	48231	Neutral Safety Switch
5	48122-01	Fibre Washer, thin
5A	48122-02	Fibre Washer, thick
6	481581	Coupler, Jackshaft
7	48114-05	Grease Fitting, straight 1/4-28
8	481582	Jackshaft (fits SW32,36,48& 52)
9	04063-09	Key, Hi-Pro #9
10	04017-16	Bolt, 5/16-18 X 3/4" Hex Head
11	43085**	Wheel Axle (SW36,48 & 52)
	43104**	Wheel Axle (SW 32)
12	484620	Muffler - Kawasaki
13	04001-08	Bolt, 5/16-18 X 3/4" Hex Head
14	422533	Backing Plate
15	04030-04	Lock Wshr. 3/8"
16	04019-04	Nut, 3/8-16 Serrated Flange
17	462285	Engine Deck (fits SW32)
	462286	Engine Deck (fits SW36,48 & 52)
18	424620	Plate, Clutch Bracket
19	04019-03	Nut, 5/16-18 Serrated Flange
20	04001-51	Bolt, 3/8-16 x 3-3/4" Hex Head
21	461397	Electric Clutch (Ogura)
22	04041-07	Washer, 3/8" (.391 x .938 x .105)
23	48197	Pulley, Transmission Input
24	04063-07	Key, Woodruff #9
25	04050-09	Retaining Ring, 5/8" Ext, Basic
26	48203	Belt, Transmission Drive
27	483208	Idler Pulley, Transmission
28	481666	Pulley, Traction Drive
29	04063-19	Key, 1/4 x 1/4 x 3/4"
30	04041-28	Flat Washer, 7/16" Special
31	04030-05	Lock Washer, 7/16"
32A	04102-04	Bolt, 7/16-20 x 2-1/2" Hex Head
32B	04103-03	Cpsrw, M10-1.5 x55 Metric Hex Hd

Ref. No.	Part No.	Description
33	04001-12	Bolt, 5/16-18 x 1-3/4" Hex Head
34	04002-06	Bolt, M8-1.25 x 16
35	04021-09	Nut, 3/8-16 Elastic Stop
36	04040-15	Flat Washer, 5/16"
37	040001-32	Bolt, Hex Head 3/8-16 x 1-1/4"
38	48192	Wheel Assembly (incl. 38A-38B) (fits SW36,48,52)
	48253	Wheel Assembly (Incl. 38C - 38D) (SW32)
38A	481860	Tire, 13 x 6.50-6, 2-ply (fits SW36,48,52)
38B	481859	Rim & Bearing Assembly (incl. 39)
38C	481861	Tire, 13 x 5.00-6 2-ply (SW32 only)
38D	481862	Rim Assembly (incl. 39) (SW32 only)
39	481858	Wheel Bearing
40	04042-05	Washer, 1-1/16 x 1-3/4 x 12 ga
40A	04041-14	Washer, 1-1/16 x 1-1/2 x 18 ga
41	04050-08	Retaining Ring, 1" Ext.- "E"
42	48200	Pulley, Wheel Drive
43	43088	Spacer, Wheel Pulley
44	48209	Brake Drum
45	04017-19	Bolt, 5/16-18 x 1-1/2" Serrated Flange
46	04003-03	Bolt, 3/8-16 x 2" Carriage
47	04021-10	Nut, 5/16-18 Elastic Stop
48	04003-04	Bolt, 5/16-18 x 1" Carriage
49	421370	Anti Rotation Bracket
50	04031-03	Lock Washer External Tooth
51	481716	Rubber Pad, Clutch Stop
52	422534	Plate, Backing
53	4201134	Shield, Muffler Outter
54	4201133	Shield, Muffler Inner
55	04001-07	Bolt, 5/16-18 x .5" Hex Head
56	04001-08	Bolt, 5/16-18 x .75" Hex Head
57	04117-01	Lknut, 5/16-18 Elastic Stop w/Flange
58	04017-37	Bolt, 1/2-13 x 1.25" Serrated Flange HH
59	04117-04	Lknut, 1/2-13 Elastic Stop w/Flange
60	453755	Brkt, Muffler Guard Mtg.

* Available through engine manufacturer
** = Requires welding onto chassis.

HANDLE ASSEMBLY

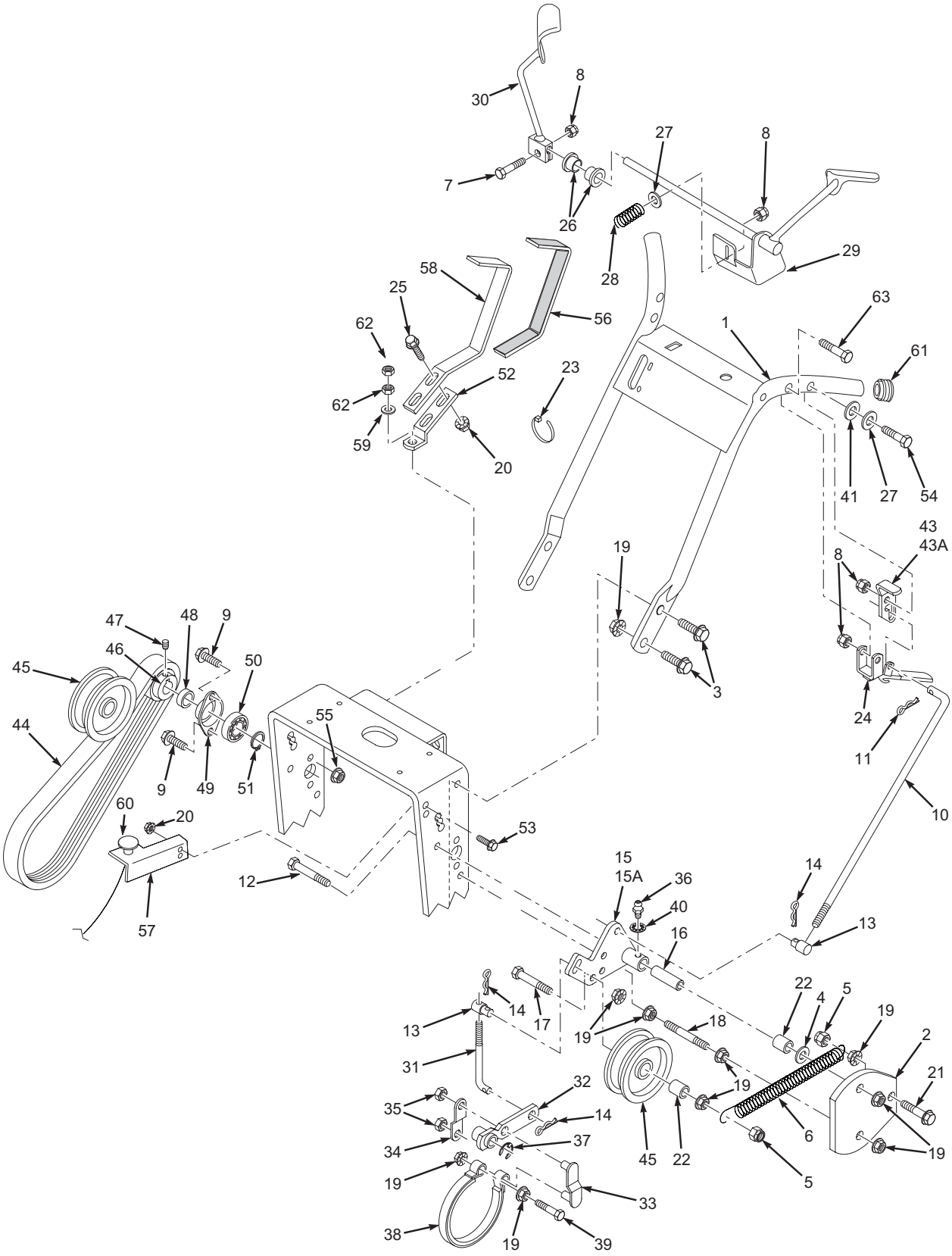

HANDLE ASSEMBLY

Ref. No.	Part No.	Description
1	463097	Handle Assembly
2	421360	Belt Guard
3	04017-27	Capscrw, 3/8-16 x 1" Serr. Flg.
4	04041-07	Washer, 3/8" (.391 x .938 x .105)
5	04021-09	Nut, 3/8-16 Elastic Stop
6	48755	Spring, Idler
7	04001-10	Bolt, 5/16-18 x 1-1/4" Hex Head
8	04021-10	Nut, 5/16-18 Elastic Stop
9	04017-05	Capscrew, 1/4-20 x 3/4" Hex Head
10	44140	Control Rod, Steering
11	04062-02	Hair Pin, Small
12	04001-23	Bolt, 3/8-16 x 4-1/2" Hex Head
13	43032	Swivel Joint
14	04062-01	Hair Pin, Large .094 Dia.
15	45847	Idler Bracket, RH
15A	45846	Idler Bracket, LH
16	43092	Idler Sleeve
17	04001-62	Bolt, 3/8-16 x 3/4" Hex Head
18	04004-17	Stud, 3/8-16 x 5"
19	04019-04	Nut, 3/8-16 Serrated Flange
20	04019-03	Nut, 5/16-18 Serrated Flange
21	04017-28	Cpscrw, 3/16-18 x 1-1/4" Serr. Flg
22	43286	Spacer
23	48028-05	Cable Tie
24	483160	Steering Lever
25	04017-17	Capscrew, 5/16-18 x 1" Serr. Flg.
26	483142	Bushing
27	04040-15	Washer, 5/16 (.375 x .875 x .083)
28	483040	Spring, Operator Presence
29	451915	Operator Presence Lever, LH
30	451917	Operator Presence Lever, RH
31	44005	Brake Rod
32	45092	Brake Lever
33	45093	Brake Link
34	42254	Brake Link Plate
35	04024-01	Nut, 3/8 Push-on
36	48114-05	Grease Fitting, Straight 1/4-28
37	04050-01	Retaining Ring, 5/8 Ext. "E"
38	48210	Brake Band
39	04001-45	Bolt, 3/8-16 x 2" Hex Head
40	04031-08	1/4" Internal Tooth Lockwasher
41	04032-01	Socket Head Capscrew #8-32 x 1/2"
42	04015-13	Socket Head Capscrew #8-32 x 1/2"
43	422880	Neutral Latch, RH
43A	422879	Neutral Latch, LH
44	48202A	Belt, Wheel Drive
45	483211	Idler Pulley, Wheel Drive

Ref. No.	Part No.	Description
46	482645	Pulley, Jackshaft (Inc. 47)
47	04012-04	Setscrew, Hex Socket Knurl Cup Pt. 5/16-18
48	43098	Spacer, Jackshaft Pulley
49	48223	Flange, Jackshaft Bearing
50	48224	Bearing, Jackshaft
51	04050-09	Retaining Ring, 5/8 Ext. Basic
52	422279	Shift Lever
53	04017-16	Capscrew, 5/16-18 x 3/4" Serr. Flg.
54	04001-17	Bolt, 5/16-18 x 2" Hex Head
55	04019-02	Nut, 1/4-20 Serrated Flange
56	481839	Grip, Shift Handle
57	424113	Bracket, Choke Mounting
58	461163	Shift Lever Extention (incl. 56)
59	04041-07	Washer, 3/8 (.391x .938 x .105)
60	482314	Choke Control
61	483161	Plug, Handlebar
62	04020-14	Nut, 3/8-24 UNF
63	04001-53	Bolt, 5/16-18 x 2-1/2"

SW FUEL SYSTEM

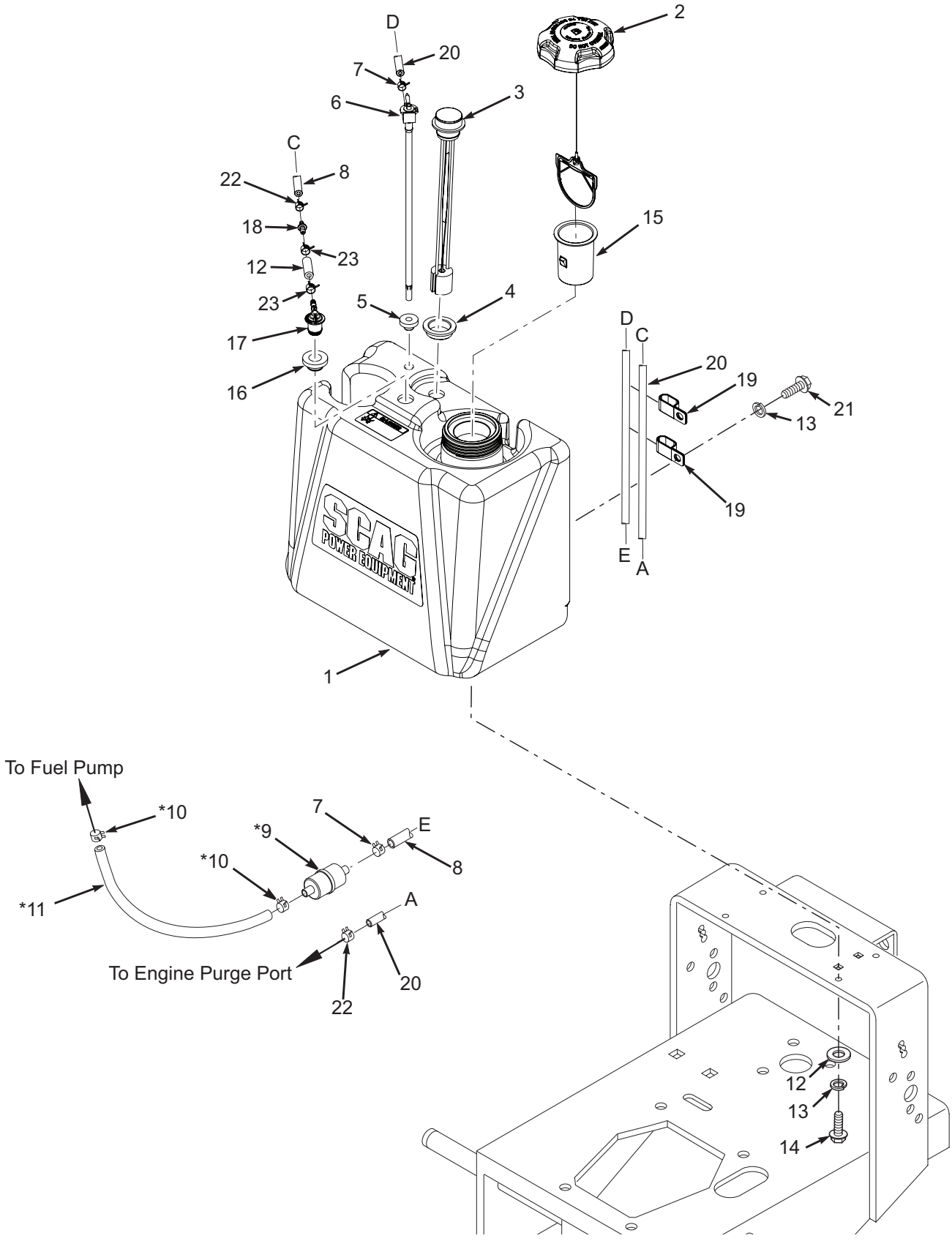

SW FUEL SYSTEM

Ref. No.	Part No.	Description
1	463283	Fuel Tank Assembly (incl. #3, 4, 5, 6, 16, 17)
2	484286	Fuel Cap w/ Tether
	484297	Fuel Cap w/Tethered - California Models Only (not shown)
3	484243	Fuel Gauge Assembly (incl. #4)
4	484242	Seal, Fuel Gauge
5	482571	Bushing, .56 Dia. Viton
6	486181	Valve, Fuel Shutoff w/Screen
7	48059-01	Clamp, Fuel Hose
8	483617	Fuel Hose, 1/4" ID (order by inch)
9	*	Fuel Filter
10	*	Clamp, Fuel Hose
11	*	Fuel Hose
12	484347	Hose, Vapor Recovery 1/4" (order by inch)
13	04030-03	Lockwasher, 5/16" Spring
14	04001-09	Bolt, Hex Head 5/16-18 x 1"
15	484279-01	Tube, Fuel Tank Insert - 4"
16	484285	Grommet, Viton,
17	484333	Fitting, Remote Vent
18	484343-01	Mender, 1/4 x 3/16 w/.02 Hole
19	48030-11	Clamp, 5/8" Double
20	484345	Hose, Vapor Recovery 3/16" (order by inch)
21	04001-08	Bolt, Hex Head 5/16-18 x 3/4"
22	48059-05	Clamp, Vapor Recovery Hose 3/16"
23	48059-02	Clamp, Fuel Hose 7/32" ID

* = Available through engine manufacturer only.

INSTRUMENT PANEL

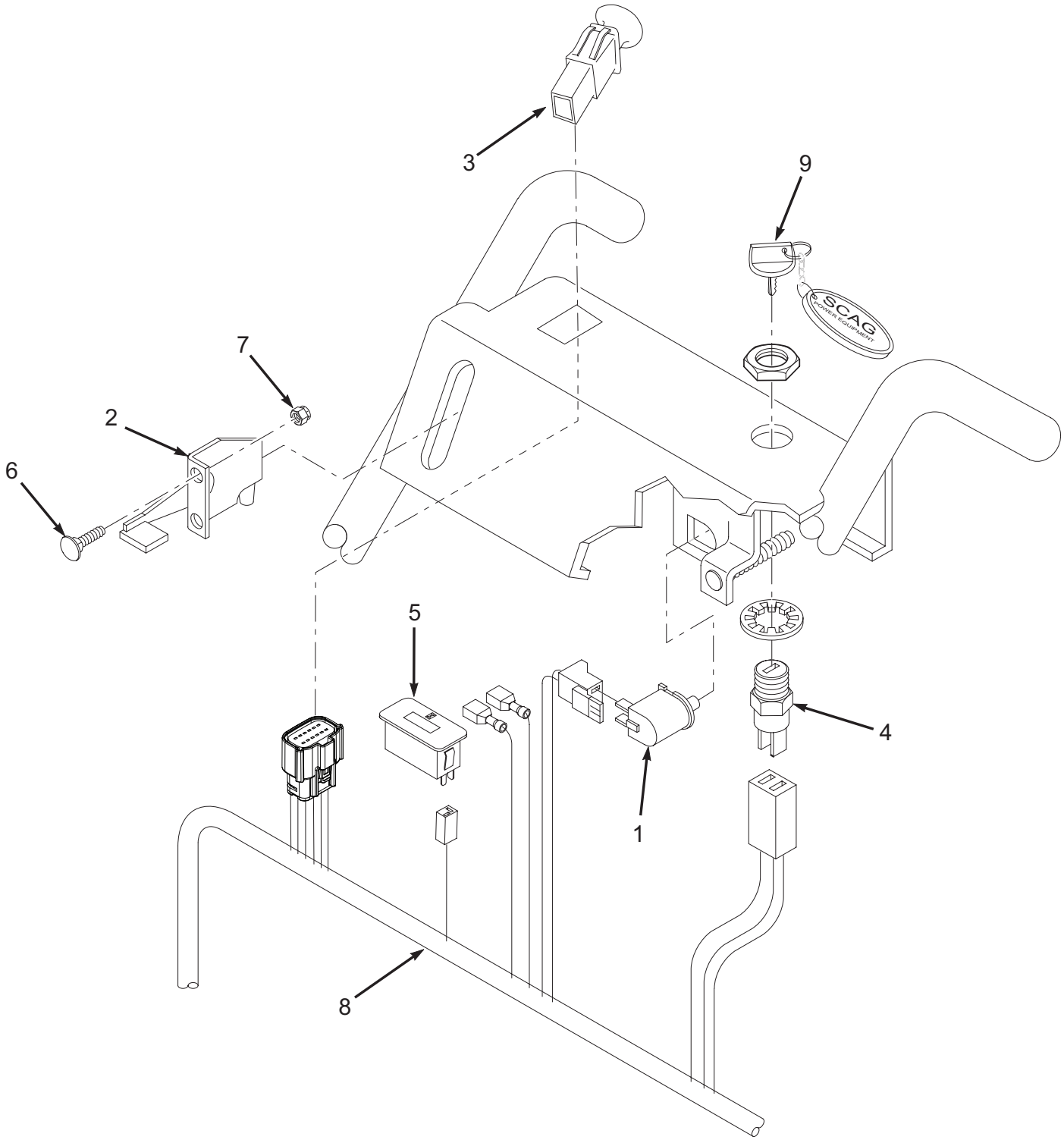

INSTRUMENT PANEL

Ref. No.	Part No.	Description
1	48717	Switch, Neutral Lock
2	48946	Throttle Control - Kawasaki
3	485833	Engagement Switch, Electric Clutch
4	48609	Key Switch
5	484565	Hour Meter
6	04003-43	Bolt, Carriage #10-32 x 1/2"
7	04021-26	Nut, #10-32 Elastic Stop
8	486118	Handle Wire Harness, Manual Start
9	462069	Key Chain w/Keys
	483609	Key w/Shroud
*	48030-09	Clamp, Wire Harness

* Not Shown

PEERLESS TRANSMISSION 700-070

FOR REFERENCE ONLY - ORDER PARTS FROM PEERLESS / TECUMSEH

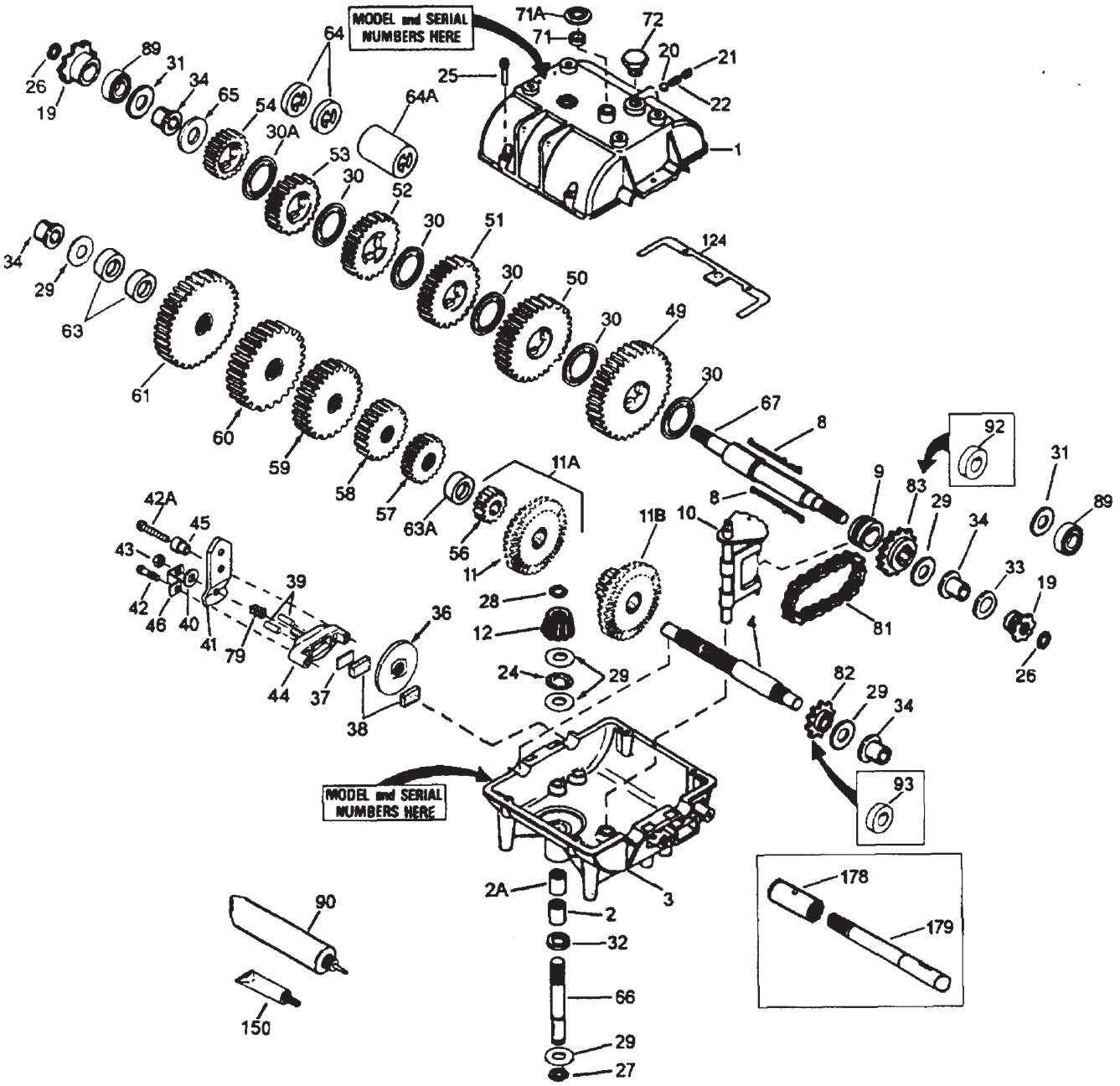

PEERLESS TRANSMISSION 700-070

FOR REFERENCE ONLY - ORDER PARTS FROM PEERLESS / TECUMSEH

Ref. No.	Part No.	Description
1	772083A	Case, Transmisson
2	780086A	Needle Bearing Grease Spec
2A	780142	Needle Bearing
3	770061A	Case, Transmission
8	792089A	Shift Key
9	784266	Shift Collar
10	784376	Shift Rod & Fork
11	778154	Bevel Gear (42 teeth)
12	778176	Bevel Pinion (14 teeth-steel)
20	792077	Steel Ball, 5/16" dia.
21	792078	Set Screw, 3/8-16 x 3/8"
22	792079	Spring
24	780071	Thrust Bearing
25	792073	Screw, 1/4-20 x 1-1/4" (6)
27	792035	Retaining Ring
28	788040	Retaining Ring
29	780072	Washer (6)
30	780108	Washer (5)
32	792001	"O" Ring
34	780105A	Flanged Bushing
49	778146A	Spur Gear (37 teeth)

REF. NO.	PART NO.	DESCRIPTION
50	778125	Spur Rear (35 teeth)
51	778239A	Spur Gear (32 teeth-steel)
52	778124A	Spur Gear (30 teeth)
53	778123A	Spur Gear (25 teeth)
56	778145	Spur Gear (12 teeth-steel)
57	778151	Spur Gear (15 teeth)
58	778240	Spur Gear (18 teeth-steel)
59	778126A	Spur Gear (20 teeth)
60	778127A	Spur Gear (25 teeth)
65	780139	Washer
66	776135	Input Shaft (3-11/16" long)
67	776402	Shifter & Brake Shaft
71	788069	Square Cut Ring
72	792074	Threaded Plug (Shipping only, not used)
81	786081	Roller Chain (No. 41 chain, 24 links)
82	786082	Sprocket (9 teeth)
83	786083	Sprocket (18 teeth)
90	788067B	Grease (32 oz. bottle Bentonite grease)
150	510334	Gasket Eliminator (Loctite #515)
178	*	Coupling (See page 26-27 for part number)
179	*	Connector Shaft (See page 26-27 for part number)

WIRE HARNESSES

ENGINE DECK
WIRE HARNESS
PART NO. 484302

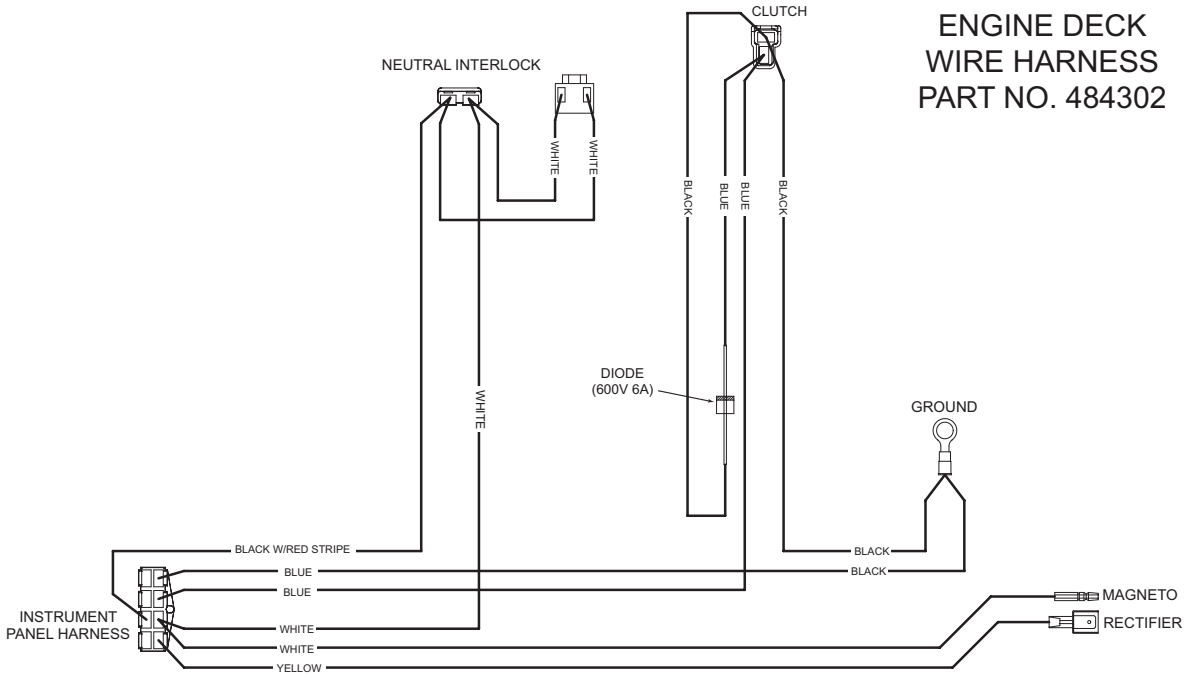

HANDLE WIRE HARNESS
Part No. 486118

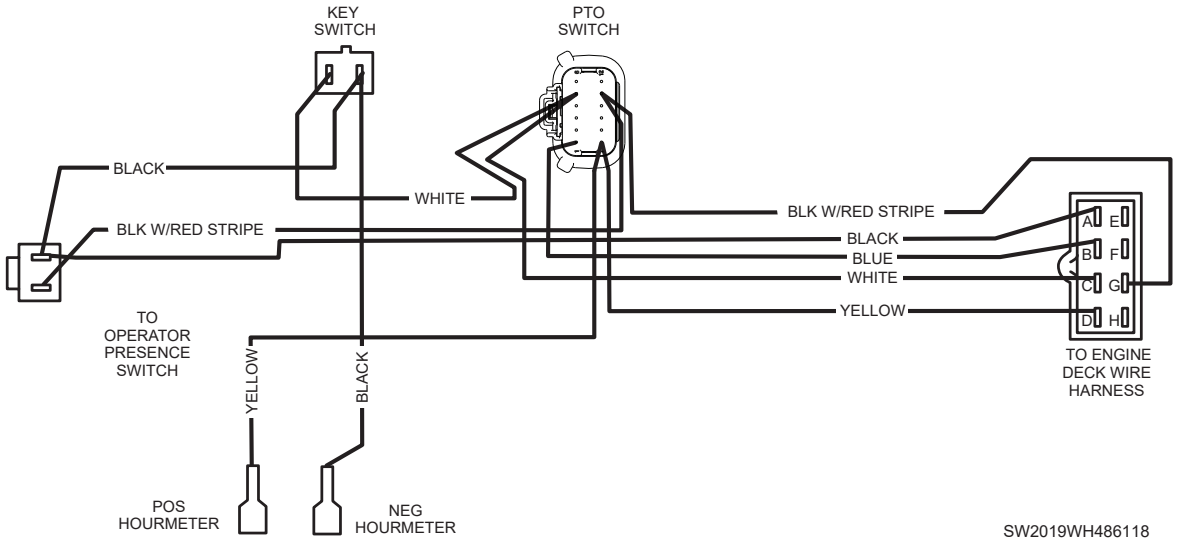

SW ELECTRICAL SCHEMATIC - RECOIL START

(shown with Key off, PTO Off, Shift Lever in Neutral, OPC Disengaged)

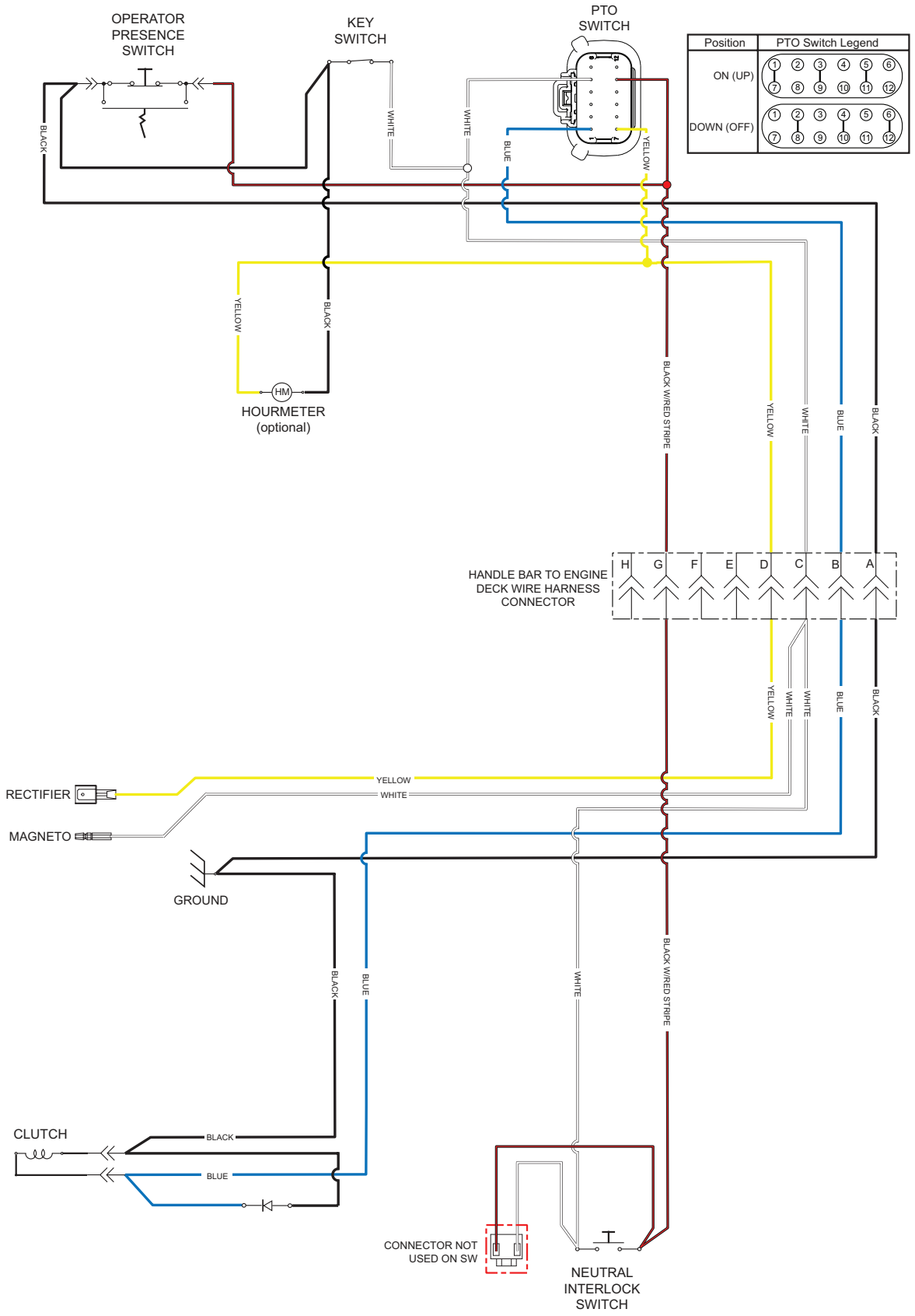

REPLACEMENT DECALS AND INFORMATION PLATES



1



2

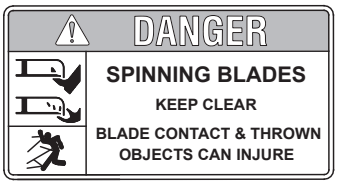

3

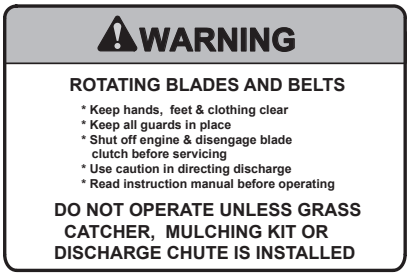

4



5



6

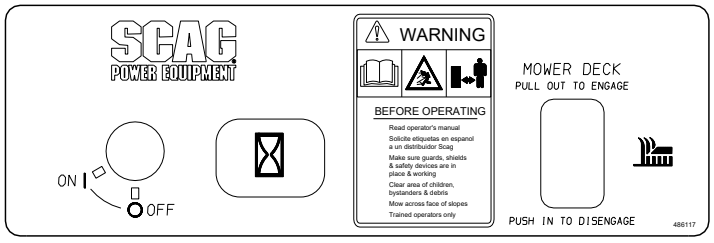

7



8

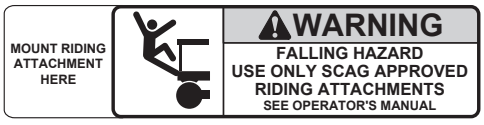

9



10

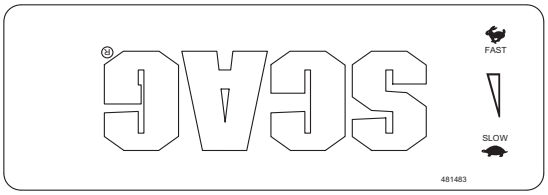

11

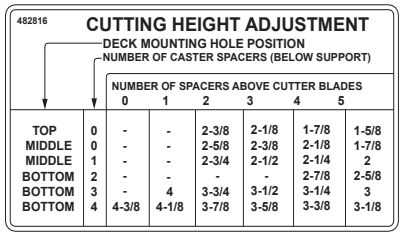

12

REPLACEMENT DECALS AND INFORMATION PLATES

Ref. No.	Part No.	Description
1	483405	Decal, Discharge Chute
2	48314	Decal, Scag Logo
3	483505	Decal, Danger-Spinning Blades
4	483406	Decal, Warning-Rotating Blades
5	481971	Decal, Heavy Duty Commercial
6	48332	Decal, Shift Index
7	486117	Decal, Instrument Panel - Rear
8	485403	Decal, Metalcraft - USA
9	483404	Decal, Sulky Attachment
10	487212	Decal, Belt Cover
11	481483	Decal, Instrument Panel - Front
12	482816	Decal, Height of Cut
13	48315	Decal, 32
	482297	Decal, 36 Advantage
14	483199	Decal, 48 Velocity Plus
	483200	Decal, 52 Velocity Plus
15	485368	Decal, SW Replacement Parts
16	485526	Decal, Belt Routing - 32 & 36A
	485527	Decal, Belt Routing - 48V & 52V
17	486136	Decal, Scag Power Equipment (Fuel Tank)
**	461986	Spanish Decal Kit, Walk-Behinds (Not Shown)
**	483900	Decal, Warning Spark Arrest (Not Shown) - California Models Only



13

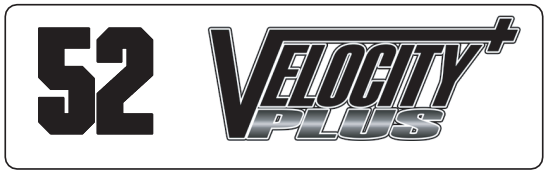

14

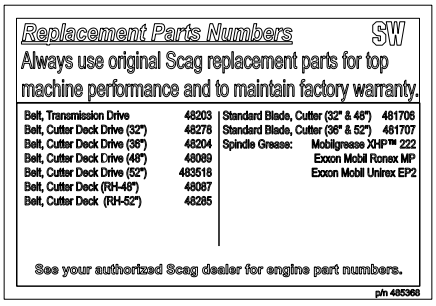

15

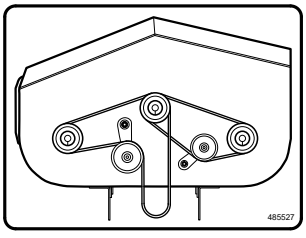

16

SCAG POWER EQUIPMENT®

17

NOTES

PAGE LEFT INTENTIONALLY BLANK

LIMITED WARRANTY - COMMERCIAL EQUIPMENT

Any part of the Scag commercial mower manufactured by Scag Power Equipment and found, in the reasonable judgment of Scag, to be defective in materials or workmanship, will be repaired or replaced by an Authorized Scag Service Dealer without charge for parts and labor during the periods specified below. This warranty is limited to the original purchaser provided the product was purchased from an Authorized Scag Power Equipment Dealer and is not transferable. Proof of purchase will be required by the dealer to substantiate any warranty claims. All warranty work must be performed by an Authorized Scag Service Dealer.

This warranty is limited to the following specified periods from the date of the original retail purchase for defects in materials or workmanship:

- Wear items including drive belts, blades, hydraulic hoses and tires are warranted for ninety (90) days.
- Batteries are covered for ninety (90) days.
- Frame and structural components including oil reservoir and oil coolers are warranted for two (2) years (parts and labor) for commercial use or three (3) years / 500 hours (whichever comes first) (parts and labor) for non-commercial use.
- Cutter decks are warranted against cracking for a period of three (3) years. (parts and labor 1st and 2nd year; parts only 3rd year.) The repair or replacement of the cutter deck will be at the option of Scag Power Equipment. We reserve the right to request components for evaluation. This warranty does not cover any mower that has been subject to misuse, neglect, negligence, or accident, or that has been operated in any way contrary to the operating instructions as specified in the Operator's Manual.
- Engines and electric starters are covered by the engine manufacturer's warranty period.
- Major drive system components are warranted for two (2) years (parts and labor) for commercial use or three (3) year / 500 hour (whichever comes first) (parts and labor) for non-commercial use by Scag Power Equipment. (commercial and non-commercial warranty excludes fittings, hoses, drive belts). The repair or replacement of the hydraulic pump or hydraulic motor will be at the option of Scag Power Equipment. This warranty does not cover any mower that has been subject to misuse, neglect, negligence, or accident, or that has been operated in any way contrary to the operating instructions as specified in the Operator's Manual.
- Electric clutches have a Limited Warranty for two (2) years (parts and labor) for commercial use or three (3) year / 500 hours (whichever comes first) (parts and labor) for non-commercial use.
- Spindle assemblies have a Limited Warranty for three years (parts and labor 1st year and 2nd; parts only 3rd year).
- Any Scag product used for rental purposes is covered by a 90 day warranty.

The Scag mower, including any defective part must be returned to an Authorized Scag Service Dealer within the warranty period. The expense of delivering the mower to the dealer for warranty work and the expense of returning it to the owner after repair will be paid for by the owner. Scag's responsibility is limited to making the required repairs and no claim of breach of warranty shall be cause for cancellation or rescission of the contract of sale of any Scag mower. "Non-Commercial" use is defined as a single property owner, where the single property is the residence of the owner of the mower. If the mower is cutting more than the owners single property, it is deemed commercial use and the "non-commercial" warranty does not apply. Scag Power Equipment reserves the right to deny and / or void the non-commercial warranty if it believes it to be in commercial use.

This warranty does not cover any mower that has been subject to misuse, neglect, negligence, or accident, or that has been operated in any way contrary to the operating instructions as specified in the Operator's Manual. The warranty does not apply to any damage to the mower that is the result of improper maintenance, or to any mower or parts that have not been assembled or installed as specified in the Operator's Manual and Assembly Manual. The warranty does not cover any mower that has been altered or modified, changing performance or durability. In addition, the warranty does not extend to repairs made necessary by normal wear, or by the use of parts or accessories which, in the reasonable judgment of Scag, are either incompatible with the Scag mower or adversely affect its operation, performance or durability.

Scag Power Equipment reserves the right to change or improve the design of any mower without assuming any obligation to modify any mower previously manufactured. All other implied warranties are limited in duration to the two (2) year for commercial use, three (3) years / 500 hour for non-commercial use or ninety (90) days for mowers used for rental purpose. Accordingly, any such implied warranties including merchantability, fitness for a particular purpose, or otherwise, are disclaimed in their entirety after the expiration of the appropriate two year, three year / 500 hour or ninety day warranty period. Scag's obligation under this warranty is strictly and exclusively limited to the repair or replacement of defective parts and Scag does not assume or authorize anyone to assume for them any other obligation. Some states do not allow limitations on how long an implied warranty lasts, so the above limitation may not apply to you.

Scag assumes no responsibility for incidental, consequential or other damages including, but not limited to, expense for gasoline, expense of delivering the mower to an Authorized Scag Service Dealer and expense of returning it to the owner, mechanic's travel time, telephone or telegram charges, rental of a like product during the time warranty repairs are being performed, travel, loss or damage to personal property, loss of revenue, loss of use of the mower, loss of time or inconvenience. Some states do not allow the exclusion or limitation of incidental or consequential damages, so the above limitation or exclusion may not apply to you. This warranty gives you specific legal rights, and you may also have other rights which vary from state to state.



Scag Power Equipment Headquarters
1000 Metalcraft Drive
Mayville, Wisconsin 53050
1.920.644.8100

Mailing Information
PO Box 152
Mayville, Wisconsin 53050

© 2027
Scag Power Equipment
Division of Metalcraft of Mayville, Inc.