SCAG POWER EQUIPMENT

OPERATOR'S MANUAL

V-RIDE LS



© 2027
Scag Power Equipment
Division of Metalcraft of Mayville, Inc.

PART NO. 03641
PRINTED 10/2026
PRINTED IN USA

Congratulations on owning a Scag V-Ride LS mower! This manual contains the operating instructions, safety information, and illustrated parts list for your machine. Reading this manual can provide you with assistance in maintenance and adjustment procedures to keep your machine performing at maximum efficiency. Please read all the information enclosed in this manual before operating your machine.

The QR code on the front cover of this manual can be scanned with your mobile device to access manuals, parts lists, and other product information on the official Scag website.

This manual covers the operating instructions and illustrated parts list for:		
SVLS-36H-18FSE	**with a serial number of**	**206D00001 to 206D99999**
SVLS-42H-18FSE	**with a serial number of**	**207D00001 to 207D99999**
SVLS-48H-22FSE	**with a serial number of**	**208D00001 to 208D99999**
SVLS-48H-25CX	**with a serial number of**	**209D00001 to 209D99999**
SVLS-52H-22FSE	**with a serial number of**	**210D00001 to 210D99999**
SVLS-52H-25CX	**with a serial number of**	**211D00001 to 211D99999**
SVLS-36H-20CX	**with a serial number of**	**215D00001 to 215D99999**
SVLS-42H-20CX	**with a serial number of**	**216D00001 to 216D99999**
Always use the entire serial number listed on the serial number tag when referring to this product.		

Model Number:	**Serial Number:**

Please use the table provided above to record the model number and serial number located on your machine for future reference.

⚠ WARNING

YOUR MACHINE IS ONLY AS SAFE AS THE OPERATOR. HAZARD CONTROL AND ACCIDENT PREVENTION ARE DEPENDENT UPON THE AWARENESS, CONCERN, PRUDENCE, AND PROPER TRAINING OF THE PERSONNEL INVOLVED IN THE OPERATION, TRANSPORT, MAINTENANCE, AND STORAGE OF THE EQUIPMENT.

- **Carefully read and understand the safety and operating instructions described in this manual. Always keep a copy of this manual with the machine.**
- **Ensure every operator is properly trained and thoroughly familiar with all controls and procedures before operating the machine.**
- **Always follow OSHA-approved operating procedures when operating the machine.**
- **Keep all shields, guards, and plates in place when operating the machine. Do not remove the grass discharge chute while the machine is running.**
- **Stay two machine widths away from slopes, drop-offs, ditches, embankments, retaining walls, water, or other obstacles.**
- **Do not mow on wet grass. Wet grass reduces traction and steering control.**
- **Under no circumstances should the machine be operated on slopes greater than 20 degrees. Do not reverse down slopes or ramps.**
- **Keep hands, feet, and clothing away from moving parts at all times.**
- **Do not carry passengers on the machine.**
- **Do not operate the machine when children or bystanders are present.**
- **If a mechanism becomes clogged during operation, stop the engine before cleaning.**
- **Before performing any maintenance or service, stop the machine and remove the ignition key.**

⚠ WARNING

CALIFORNIA PROPOSITION 65

The engine exhaust produced by this machine contains chemicals known to the State of California to cause cancer, birth defects, or other reproductive harm.

Battery posts, terminals, and related accessories for this machine contain lead and lead compounds, chemicals known to the State of California to cause cancer, birth defects, or other reproductive harm. Wash hands after handling components.

The use of this machine may expose the operator to chemicals known to the State of California to cause cancer, birth defects, or other reproductive harm.

NOTES

PAGE LEFT INTENTIONALLY BLANK

Table of Contents

SECTION 1 - INTRODUCTION 1
1.1 GENERAL INFORMATION 1
1.2 MANUAL CONVENTIONS 1
DIRECTIONAL REFERENCES 1
SAFETY ALERTS 1
1.3 SERVICING YOUR MACHINE 2
AUTHORIZED SCAG DEALERS 2
ENGINE AND DRIVETRAIN COMPONENTS 2
ATTACHMENTS AND ACCESSORIES 2
1.4 SYMBOLS 3

SECTION 2 - SAFETY INFORMATION 4
2.1 INTRODUCTION 4
2.2 BEFORE OPERATION SAFETY 4
GENERAL CONSIDERATIONS 4
PROTECTING CHILDREN 5
FUEL & FLUID SAFETY 5
SAFETY INTERLOCK SYSTEM 6
POWER TAKE-OFF (PTO) SYSTEM 6
2.3 DURING OPERATION SAFETY 7
GENERAL CONSIDERATIONS 7
SLOPE OPERATION 8
2.4 AFTER OPERATION SAFETY 9
GENERAL CONSIDERATIONS 9
MAINTENANCE SAFETY 9
STORAGE & TRANSPORTATION SAFETY 9
2.5 SPARK IGNITION SYSTEM 10
2.6 USE OF A SPARK ARRESTOR 10
2.7 SAFETY AND INSTRUCTIONAL DECAL DETAILS 11
2.8 SLOPE ANGLE GRAPH 12

SECTION 3 - SPECIFICATIONS 13
3.1 ENGINE 13
3.2 ELECTRICAL 13
3.3 DRIVE SYSTEM 13
3.4 HYDRAULIC SYSTEM 14
3.5 CUTTER DECK 14
3.6 WEIGHTS AND DIMENSIONS 14
3.7 PRODUCTIVITY 14

SECTION 4 - OPERATING INSTRUCTIONS 15
4.1 CONTROLS AND INSTRUMENTS 15
4.2 SAFETY INTERLOCK SYSTEM 17
4.3 INITIAL RUN-IN PROCEDURES 17
FIRST DAY OR 20 HOURS OF USE 17
4.4 STARTING THE ENGINE 17
4.5 GROUND TRAVEL AND STEERING 18
FORWARD TRAVEL 18
REVERSE TRAVEL 19
SLOPE OPERATION 19
4.6 OPERATING THE CUTTER DECK 20
4.7 PARKING THE MACHINE 20
4.8 POST-OPERATION PROCEDURES 21
REMOVING CLOGGED MATERIAL 21
4.9 MOVING A NON-RUNNING MOWER 21
4.10 ADJUSTING THE CUTTING HEIGHT 21
4.11 MOWING RECOMMENDATIONS 22

SECTION 5 - TROUBLESHOOTING CUTTING CONDITIONS 23

SECTION 6 - ADJUSTMENTS 26
6.1 PARKING BRAKE ADJUSTMENT 26
6.2 TRAVEL ADJUSTMENT 26
NEUTRAL ADJUSTMENT 26
TRACKING ADJUSTMENT 27
6.3 THROTTLE & CHOKE ADJUSTMENT 27
6.4 BELT ADJUSTMENTS 28
6.5 CUTTER DECK ADJUSTMENTS 28
CUTTER DECK LEVEL 28
CUTTER DECK PITCH 28
CUTTER DECK HEIGHT 29
6.6 ELECTRIC CLUTCH ADJUSTMENT 30
6.7 OPERATOR PLATFORM ADJUSTMENT 31
6.8 ACCESSING INTERNAL COMPONENTS 31
REMOVING THE OPERATOR CUSHION 31
REMOVING THE FOOT GUARD 31

SECTION 7 - MAINTENANCE 32
7.1 RECOMMENDED MAINTENANCE INTERVALS 32
7.2 RECOMMENDED MAINTENANCE INTERVALS CONT. 33
7.3 LUBRICATION 33
GREASE FITTING LUBRICATION CHART 33
GREASE FITTING LOCATIONS 34
7.4 HYDRAULIC SYSTEM 35
CHANGING HYDRAULIC OIL & FILTER 35

7.5 ENGINE OIL 36
CHECKING THE ENGINE OIL LEVEL 36
CHANGING THE ENGINE OIL & FILTER 36
7.6 ENGINE FUEL SYSTEM 37
FILLING THE FUEL TANK 37
REPLACING THE FUEL FILTER 37
7.7 ENGINE AIR CLEANER 38
7.8 BATTERY 38
REMOVING THE BATTERY 38
CHARGING THE BATTERY 39
JUMP-STARTING THE BATTERY 39
7.9 DRIVE BELTS 39
7.10 CUTTER BLADES 40
BLADE INSPECTION 40
BLADE SHARPENING 40
BLADE REPLACEMENT 41
7.11 TIRES 41
7.12 BODY, DECK, AND UPHOLSTERY 41

SECTION 8 - ILLUSTRATED PARTS LIST 43
SCAG APPROVED ATTACHMENTS AND ACCESSORIES 43
36H CUTTER DECK 45
42H CUTTER DECK 47
48H CUTTER DECK 49
52H CUTTER DECK 51
CUTTER DECK CONTROLS 53
SHEET METAL COMPONENTS 55
STEERING CONTROLS 57
FUEL SYSTEM AND ENGINE EXHAUST 59
DRIVE SYSTEM COMPONENTS 61
CONTROL PANEL AND ELECTRICAL SYSTEM 63
ZT-3100 HYDRAULIC TRANSAXLE ASSEMBLY 65
REPLACEMENT DECALS 67
ELECTRICAL SCHEMATICS (HARNESS) 68
ELECTRICAL SCHEMATICS (ADAPTERS) 69

LIMITED WARRANTY - SVLS ..... INSIDE BACK COVER

NOTES

PAGE LEFT INTENTIONALLY BLANK

INTRODUCTION

1.1 GENERAL INFORMATION

Your Scag V-Ride LS was built to the highest standards in the industry. However, the prolonged life and maximum efficiency of your machine depend on you following the operating, adjustment, and maintenance instructions in this manual.

Carefully read the safety and operating instructions in this manual before attempting to operate your machine. You are responsible for the safe and proper operation of your machine.

IMPORTANT

For illustrative clarity, some graphics in this manual may show shields, guards, or covers removed from the machine. Under no circumstances should your machine be operated without these devices secured in place.

All information in this manual is based on product information available at the time of approval for printing. Scag Power Equipment reserves the right to make changes to this manual at any time without notice and without incurring any obligation. **Please visit the official Scag Power Equipment website (www.scag.com) for updated manual releases.**

A replacement manual is available from the following sources: your Authorized Scag Dealer, the Scag Power Equipment Service Department (PO Box 152; Mayville, WI 53050), and on the official Scag Power Equipment website (www.scag.com). When requesting a replacement manual, please indicate the complete model number and serial number listed on your Scag Power Equipment product.

If additional information or service is needed for your machine, please contact your Authorized Scag Dealer.

1.2 MANUAL CONVENTIONS

DIRECTIONAL REFERENCES

Directional references are used throughout this manual to locate the features of your machine. The "Right," "Left," "Front," and "Rear" of the machine are referenced from the perspective of the operator while standing in the operating position and facing the forward travel direction.

SAFETY ALERTS



The symbol above means, **"Attention! Become alert! Your safety is involved!"** This symbol is used with the following safety alerts to communicate important safety precautions, safe operating practices, and dangerous hazards. Carefully read all safety alerts associated with your machine to avoid injury and possible death. Be sure to understand all potential hazards and causes of injury or death before attempting to operate your machine.

⚠ DANGER

"DANGER" denotes an extremely hazardous situation on or near the machine. If not avoided, this hazard will result in serious injury or death.

⚠ WARNING

"WARNING" denotes a hazardous situation on or near the machine. If not avoided, this hazard could result in serious injury or death.

⚠ CAUTION

"CAUTION" denotes a hazardous situation on or near the machine. If not avoided, this hazard may result in minor to moderate injury.

1.3 SERVICING YOUR MACHINE

AUTHORIZED SCAG DEALERS

We encourage you to contact your Authorized Scag Dealer for any repairs to your machine. All Scag Power Equipment dealers are informed of the latest methods to service your equipment and carry a full line of Scag replacement parts. Their services are efficient, both in the field and at their service shops.

When ordering replacement parts for your machine, always provide the complete model number and serial number listed on your machine. The V-Ride LS serial number plate is located on the frame of the machine near the engine. See Figure 1-1 for more information.

IMPORTANT

The use of parts other than Scag replacement parts will void the warranty on your machine. Unauthorized replacement parts may adversely affect the performance, durability, or safety of your machine.

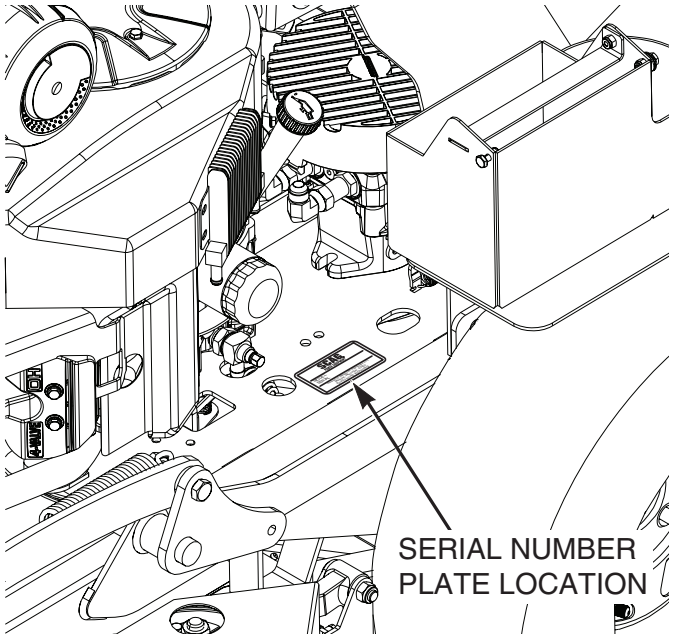

Figure 1-1. Serial Number Plate Location

ENGINE AND DRIVETRAIN COMPONENTS

The detailed servicing and repair procedures for the engine and drivetrain of your machine are not covered in this manual. For service of these components during the limited warranty period, please contact your Authorized Scag Dealer or locate an authorized servicing agent of the component manufacturer. **Any unauthorized work completed on these components during the limited warranty period may void your warranty.**

ATTACHMENTS AND ACCESSORIES

Attachments and accessories manufactured by companies other than Scag Power Equipment or Metalcraft of Mayville must be approved for use on your machine by Scag Power Equipment. Any alterations or modifications made to your machine that change the performance, durability, or allow the use of unapproved attachments and accessories will not be covered by the limited warranty. See Section 8 for more information.

1.4 SYMBOLS

SYMBOL	DESCRIPTION	SYMBOL	DESCRIPTION
	Read Operator's Manual		CE Mark
	Parking Brake	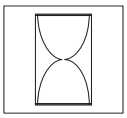	Hour Meter / Elapsed Operating Hours
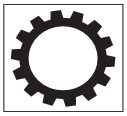	Transmission	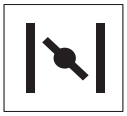	Choke
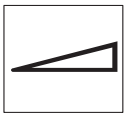	Continuously Variable – Linear		Oil
	ON / START	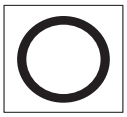	OFF / STOP
	Fast	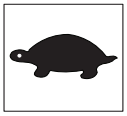	Slow
	Spring Tension on Idler	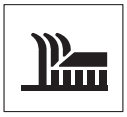	Cutting Element – Basic Symbol
	Falling Hazard	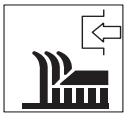	Cutting Element – Engage
	Pinch Point	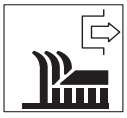	Cutting Element – Disengage
	Thrown Object Hazard		Keep Bystanders Away
	Crush Hazard		Spinning Blade Hazard

SAFETY INFORMATION

2.1 INTRODUCTION

Your Scag V-Ride LS is only as safe as the operator. Hazard control and accident prevention are dependent upon the awareness, prudence, and proper training of the personnel involved in the operation, maintenance, transportation, and storage of your machine.

Ensure every operator is properly trained and thoroughly familiar with all controls, operating practices, and safety precautions before operating your machine. The owner and operator can prevent, and will be responsible for, accidents or injuries occurring to themselves, other people, or property.

NOTE

Ensure all personnel involved in the operation of your machine know where this manual is stored. Keep a record of each employee that has read this manual.

Scan the QR code below with your mobile device to access the "Safe Operations Videos" web page on the official Scag Power Equipment website. Carefully watch all relevant safety videos before attempting to operate your machine.

Figure 2-1. Safety Video QR Code

2.2 BEFORE OPERATION SAFETY

GENERAL CONSIDERATIONS

1. Clear the operating area of all objects that could interfere with the operation of the machine. These objects may be picked up and thrown by the cutter blades when mowing if not removed.
2. Ensure all operators and mechanics working with the machine are appropriately trained and understand the procedures outlined in this manual. The owner of the machine is responsible for training all operators working with their machine.
3. Do not operate the machine when children or bystanders are present. Turn off the machine if any children or bystanders enter the operating area.
4. Never allow children or untrained personnel to operate the machine.
5. Do not carry passengers on the machine.
6. Wear adequate protective equipment while operating the machine. Avoid loose clothing, jewelry, or long hair that could get tangled in moving parts. Wearing safety glasses, slip-resistant safety shoes, and a helmet is advisable and required by some local ordinances and insurance regulations.

⚠ WARNING

Prolonged periods of exposure while operating this machine may cause hearing loss. Always wear hearing protection while operating the machine.

7. Keep the machine in a good operating condition. Keep all shields, safety devices, and decals in place. If a shield, safety device, or decal is damaged or defective, repair or replace the component before operating the machine.
8. Before operating the machine with an attachment or accessory, ensure that the component is properly installed and approved by Scag Power Equipment.
9. Do not operate the machine without the side discharge chute installed and in the down position. Ensure any optional grass catcher or mulch plate is completely installed before operating the machine.
10. Check the cutter blade mounting bolts for proper tightness at frequent intervals.
11. Ensure all safety interlock switches are functioning correctly before operating the machine.
12. Always follow the manufacturer's recommendations for wheel weights and counterweights.
13. All equipment must comply with state and local ordinances as well as the latest SAE J137 or ANSI/ASAE S279 requirements if the machine is driven on public roads. Contact your local authorities for regulations and equipment requirements.

PROTECTING CHILDREN

Children are attracted to lawn mowing machines and mowing activities. Many associate mowing machines with fun because someone has given them a ride on a machine in the past. Death or serious injury may occur if the operator is not alert to the presence of children.

1. Keep children out of the operating area and in the care of a responsible adult. Be aware of any children near the operating area.
2. Do not assume that children will stay where you last saw them. Turn off the machine if children enter the operating area.
3. Never allow children to ride on the machine, even if the cutter deck is disengaged. Children may interfere with safe operating procedures and risk serious injury if thrown from the machine.
4. Do not tow children in a cart or trailer. Children may interfere with safe operating procedures and risk serious injury if thrown from the cart or trailer.
5. Children do not understand the dangers of rotating blades, nor do they understand that the operator is unaware of their presence. Children who have received rides in the past may suddenly appear in the operating area for another ride and be run over or backed over by the machine.
6. Tragic accidents can occur if the operator is not alert to the presence of children, especially when children approach the machine from behind. Disengage the cutter deck and look down and behind the machine before traveling in reverse.

FUEL & FLUID SAFETY

1. Fuel is flammable and fuel vapors are explosive; handle it with extreme care.
2. Keep all flammable ignition sources (cigarettes, matches, etc.) away from the machine and any fuel containers. Never store fuel near open flames, heat sources, or sparks.
3. Never fuel indoors or inside enclosed spaces. Move the machine outside for adequate ventilation.
4. Store fuel only in portable, non-metal containers approved by the Underwriter's Laboratory (U.L.) or the American Society for Testing & Materials (ASTM).
5. Place containers on the ground to prevent fires and explosions caused by static electric discharge. Fuel vapors can be ignited by static electric discharge in ungrounded containers.
6. Do not fill fuel containers on a truck or trailer bed with a plastic liner. Always place containers on the ground away from vehicles before filling.
7. Always use a funnel or spout to prevent oil and fuel spillage. If fuel is spilled, do not start the machine or create any source of ignition until the fuel has been cleaned and the vapors have evaporated.
8. Clean any oil and fuel spillage before operating the machine. Remove all oil- and fuel-soaked debris.

⚠ CAUTION

Areas affected by fuel spills may suffer from irritation, chemical burns, and contact dermatitis. If fuel is spilled on clothing, change the clothing immediately and wash any affected skin.

9. Never remove the fuel tank cap or add fuel while the machine is running. Allow the engine to cool before adding fuel.
10. Do not operate the machine without the exhaust system installed and working properly.

⚠ DANGER

Exhaust fumes are hazardous and contain carbon monoxide, which can cause brain injury and death. Do not run the machine indoors or inside confined areas without proper ventilation.

11. Ensure all hydraulic fluid connections are tight and that all hydraulic hoses and lines are in a good operating condition before starting the machine.

SAFETY INTERLOCK SYSTEM

⚠ WARNING

This machine is equipped with a safety interlock system intended to protect the operator and others from injury.

This is accomplished by preventing the engine from starting unless the deck drive is disengaged, the parking brake is engaged, the steering control levers are in the neutral lock position, and the operator is in the operating position.

The safety interlock system will shut off the engine if the operator leaves the operator platform with the steering control levers not in the neutral lock position, with the cutter blades engaged, and without the parking brake engaged.

Never operate the machine with the interlock system disconnected, bypassed, or malfunctioning.

The safety interlock system should be tested before each use of the machine. If the safety interlock system does not operate as described in the following procedure, contact your local Authorized Scag Dealer immediately to have the system repaired. Do not operate the machine until the safety interlock system has been repaired.

NOTE

All V-Ride LS models will require the operator to start these procedures while off of the operator platform unless specified otherwise.

1. Place the steering control levers in the neutral position, engage the parking brake, and turn the PTO switch to the ON position. Stand on the operator platform and attempt to start the engine. The engine should not start.
2. Place the steering control levers in the neutral position, disengage the parking brake, and turn the PTO switch to the OFF position. Stand on the operator platform and attempt to start the engine. The engine should not start.
3. Place the steering control levers in the neutral position, engage the parking brake, and turn the PTO switch to the OFF position. Stand on the operator platform and start the engine. With the engine running, turn the PTO switch to the ON position and step backwards off of the operator platform. The engine should shut off.
4. Place the steering control levers in the neutral position, engage the parking brake, and turn the PTO switch to the OFF position. Stand on the operator platform and start the engine. With the engine running, disengage the parking brake and step backwards off of the operator platform. The engine should shut off.

POWER TAKE-OFF (PTO) SYSTEM

The PTO system should be tested before each use of the machine. If the PTO system does not operate as described in the following procedure, contact your local Authorized Scag Dealer immediately to have the PTO system repaired. Do not operate the machine until the PTO system has been repaired.

1. Stand in the operating position, engage the parking brake, move the steering control levers to the neutral lock position, and start the engine.
2. Set the throttle at three-quarters (3/4) speed.
3. Engage the cutter deck by pulling the yellow PTO switch, located on the instrument panel, up. See Figure 2-2 for more information.

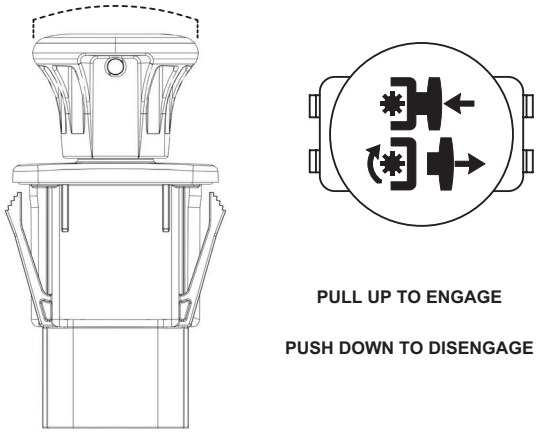

Figure 2-2. PTO Switch Function

4. Confirm that the cutter deck drive belt is engaged and turning the cutter deck spindles.
5. Disengage the cutter deck by pushing the yellow PTO switch down.
6. Confirm that all movement in the cutter deck drive belt has stopped.

2.3 DURING OPERATION SAFETY

GENERAL CONSIDERATIONS

⚠ DANGER

This machine is capable of throwing objects and amputating hands and feet. Failure to follow these instructions may result in serious injury or death.

⚠ WARNING

Extended operation of this machine exposes the operator to whole-body and hand-arm vibrations.

Prolonged exposure to these vibrations may cause discomfort, numbness, tingling, fatigue, back pain, and reduced hand dexterity. Long-term exposure may lead to permanent circulatory issues, nerve damage, carpal tunnel syndrome, and musculoskeletal injury.

Reduce vibration exposure by limiting operation time and taking regular breaks.

1. Understand the function of all controls and how to stop the machine quickly before use.
2. Avoid all distractions while operating the machine. Do not operate the machine while sick, tired, or under the influence of alcohol or drugs.
3. Only operate the machine in daylight, artificial light, and appropriate weather conditions. Do not operate the machine during lightning, thunderstorms, or other inclement weather.
4. Do not mow wet grass. Wet grass reduces traction and steering control of the machine.
5. Before attempting to start the engine, move the steering control levers to the neutral lock position and engage the parking brake.
6. Start the engine with the operator in the operating position, the steering control levers placed in the neutral lock position, the parking brake engaged, and the PTO switch disengaged.
7. Operate the machine using steady motions. Do not turn sharply. Be aware of your surroundings while backing up. Always yield the right-of-way when crossing roads and sidewalks.
8. Immediately move both steering control levers to the neutral position and engage the parking brake if steering control is lost during operation. Inspect the machine and correct any problems before continuing to operate.
9. Be aware of obstacles in your work area. Keep away from any trees, walls, and drop-offs. Beware of overhead obstructions (low branches, electrical wires, etc.) and underground obstructions (holes, rocks, roots, pipes, sprinklers, etc.). Stay alert for hidden hazards, and cautiously enter new areas.
10. Stay at least two machine widths away from drop-offs, ditches, retaining walls, and water. Avoid any slope greater than 20 degrees.
11. Never raise the cutter deck with the blades engaged.
12. Disengage power to the cutter deck before traveling in reverse. Do not mow in reverse unless absolutely necessary. If you must mow in reverse, observe the entire area behind the machine before proceeding. Mow slowly and maintain constant awareness of the area behind the machine.
13. Disengage power to the cutter deck before crossing roads, walks, or gravel drives.
14. Never direct the discharge of material towards any bystanders. Turn off the machine if any children or bystanders enter the operating area.
15. Do not direct the discharge of material toward walls, obstacles, or obstructions. Reflected material may injure the operator.

16. If the mower discharge becomes clogged, do not attempt to clear the obstruction while the machine is running. Shut off the engine, remove the key, and wait for all movement to stop before proceeding.

⚠ WARNING

Never use hands to dislodge a clogged discharge chute. Use a stick or other device to remove any obstructions after the engine and cutter blades have stopped moving.

17. The machine and any attachments must be stopped and inspected for damage after striking a foreign object. Repair all damage before restarting and operating the machine.
18. Keep hands, feet, and clothing away from moving parts of the machine while it is running. Do not make adjustments to the machine while it is running.

⚠ CAUTION

Do not touch the engine or the muffler while the engine is running or immediately after stopping the machine. These areas are hot enough to cause burns.

19. Never leave the machine unattended while running. Disengage the PTO switch, lower any attachments, engage the parking brake, stop the engine, and remove the key.
20. Disengage power to any attachments when not in use or while transporting the machine.
21. If you are uneasy while operating the machine due to uncertainty of the terrain, stop immediately.

SLOPE OPERATION

Slopes are a major cause of instability, loss-of-control, and tip-over accidents, which may result in severe injury or death. Before operating the machine on any slope, review the safety guidelines and instructions listed in this manual. The owner and operator will be responsible for the safe operation of this machine on slopes.

⚠ WARNING

Do not operate on steep slopes. Never operate the machine on slopes greater than 20 degrees. See Section 2-8 to determine the approximate angle of a slope, or use an app on your mobile device.

To test the safety of a slope, lower the cutter deck, disengage the PTO switch, and attempt to reverse up the slope. If the wheels do not slip, reduce speed and proceed with extreme caution.

Before operating on slopes, reference the "Safe Operations Videos" web page on the official Scag Power Equipment website using the QR code in Figure 2-1.

ALWAYS FOLLOW OSHA-APPROVED OPERATION

1. Use extreme caution while operating the machine on any slope or uneven surface.
2. Be aware of obstacles at the base of and on the slope. Do not operate the machine near drop-offs, ditches, embankments, or bodies of water. Remove any hazards before operation, or keep at least two cutting widths between the machine and the hazard.
3. Mark uneven terrain (holes, bumps, roots, rocks, ruts, soft turf, etc.) before operation. Uneven terrain may cause instability and overturn the machine.
4. Reduce speed and use extreme caution on slopes and in sharp turns to prevent instability, loss of control, and tipping. Be especially cautious when changing directions on slopes.
5. Do not coast when traveling downhill. Keep the machine in gear when operating on slopes.
6. Avoid starting and stopping on slopes. Keep all movements on slopes slow and gradual. If the machine loses traction, proceed slowly down the slope.
7. Do not operate the machine in conditions with questionable traction, steering, or stability. Do not mow wet grass, as the reduced traction may cause sliding and a loss of braking and steering.
8. Never tow equipment on slopes. The weight of the equipment may reduce traction and cause the machine to lose control.
9. Never park the machine on slopes or uneven terrain.

2.4 AFTER OPERATION SAFETY

GENERAL CONSIDERATIONS

1. Disengage the PTO switch, return the steering control levers to the neutral lock position, engage the parking brake, stop the engine, and remove the key before cleaning, adjusting, or repairing the machine. Wait for all movement to stop before proceeding.

   IMPORTANT

   Disconnect the spark plug wire before servicing or adjusting the machine to further prevent accidental starting of the engine.

2. Never make adjustments to the machine while the engine is running unless specifically instructed to do so. Keep hands, feet, and clothing away from the moving parts of the machine.
3. Do not touch parts that may be hot from operating the machine. Allow all hot parts to cool before maintaining, adjusting, or servicing the machine.
4. Clean dirt, grass, leaves, excessive grease, and oil from cutter decks, drives, muffler, and engine after use to reduce fire hazards.
5. Store the keys to the machine in a safe location when the machine is not in use. This location must be inaccessible to children.

MAINTENANCE SAFETY

1. Always park the machine on a level surface and engage the parking brake.
2. Disconnect the battery before repairing the machine. Disconnect the negative terminal first and the positive terminal last. Reconnect the positive terminal first and the negative terminal last when reinstalling the battery.
3. Never allow untrained personnel to service the machine. Ensure all mechanics working with the machine are appropriately trained and understand the procedures outlined in this manual.
4. Keep all nuts, bolts, and screws tight to ensure the machine is in a safe working condition. Check blade mounting bolts frequently to ensure they are tight.
5. Keep all parts in a good working condition. Replace all worn, damaged, or defective decals.
6. Be cautious when checking blades. Use a Blade Buddy (P# 9212), wrap the blade(s), or wear gloves when servicing blades.
7. Always replace damaged blades. Never straighten or weld damaged blades.
8. Do not change the engine governor settings or overspeed the engine. See the Engine Owner's Manual for information on engine settings.
9. Use jack stands rated for the weight of the machine to support components when required.
10. Carefully release pressure from any components with stored energy.

⚠ WARNING

Hydraulic fluid is under high pressure and can cause serious injury by penetrating skin.

Before performing maintenance on the hydraulic system, relieve all hydraulic pressure by placing the control levers in the neutral lock position and stopping the engine.

11. Never use hands to check for hydraulic leaks. Use paper or cardboard to search for leaks.

⚠ WARNING

Keep body and hands away from pinholes or nozzles that eject high-pressure hydraulic fluid. If hydraulic fluid is injected into the skin, it must be surgically removed by a doctor within a few hours, or gangrene may result. If your hydraulic system needs service, please see your Authorized Scag Dealer.

STORAGE & TRANSPORTATION SAFETY

1. Allow the engine to cool before storing the machine.
2. Shut off the fuel system while storing or transporting the machine.
3. Store the machine in a clean garage or storage area. Do not store the machine near open flames, sparks, fuel containers, or other hazards.
4. Service the machine before storing over long periods of time. Check all nuts, bolts, and screws to ensure the machine is in a safe working condition. Change the air cleaner, engine oil, and apply grease.

5. Cover the machine to protect it while storing over long periods of time.
6. Charge the battery in an open, well-ventilated area. Keep away from sparks and open flames. Unplug the charger before connecting or disconnecting from the battery. Always wear protective clothing and use insulated tools while working with the battery.
7. Transport the machine using a heavy-duty trailer or truck with a load rating greater than the weight of the machine. Ensure the trailer or truck complies with all legal requirements for lighting and markings. Refer to local ordinances for specific trailer and tie-down requirements before use.
8. Only use a full-width ramp to transport the machine. The ramp angle should be no more than 20 degrees. See Section 2.8.
9. Use caution when loading or unloading the machine onto a truck or trailer. Always load and unload with the heavy end of the machine facing up the ramp.
10. When transporting the machine, ensure the steering control levers are in the neutral lock position, the parking brake is engaged, and the engine is off with the key removed. Block the tires before transporting.
11. Tie the machine down securely using straps, chains, or cables. Both the front and rear straps must be directed down and outward from the machine. Refer to local ordinances for tie-down requirements before use. See Figure 2-3 and Figure 2-4.

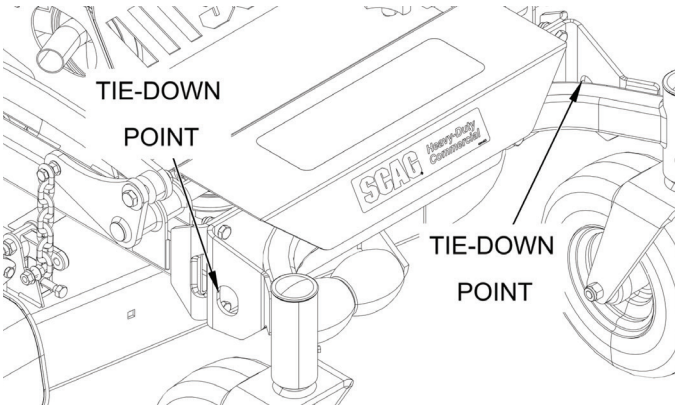

Figure 2-3. Front Tie-Down Points

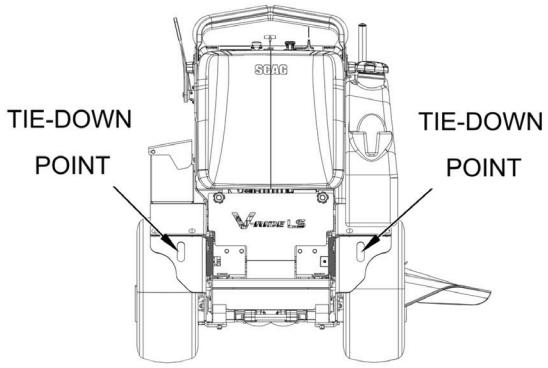

Figure 2-4. Rear Tie-Down Points

2.5 SPARK IGNITION SYSTEM

The spark ignition system equipped on this machine complies with Canadian ICES-002.

2.6 USE OF A SPARK ARRESTOR

The engine on this machine is not equipped with a spark arrestor muffler. It is in violation of California Public Resource Code, Section 4442, to operate the machine on or near any forest-covered, brush-covered, or grass-covered land unless the exhaust system is equipped with a spark arrestor that meets any applicable local and state laws. Other states and federal areas may have similar laws. Check with your local and state authorities for regulations pertaining to these requirements.

2.7 SAFETY AND INSTRUCTIONAL DECAL DETAILS

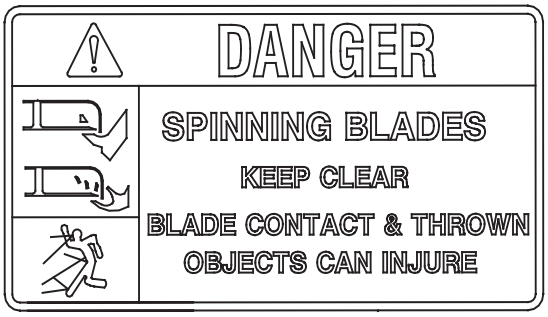

483505

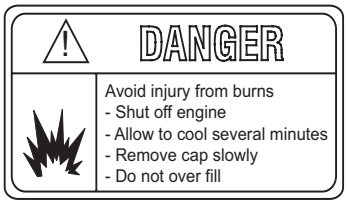

485667

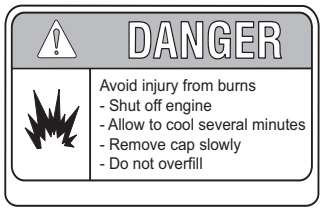

Molded in Fuel Tank

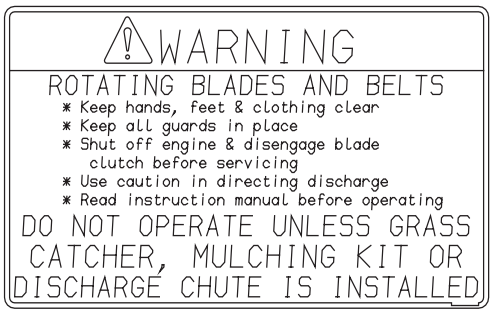

483406



487212

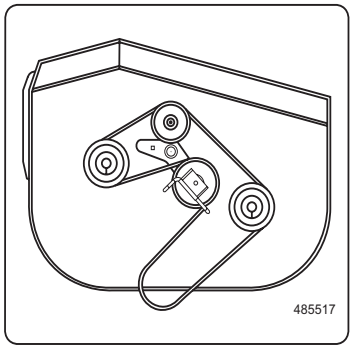

485517



483405



482100

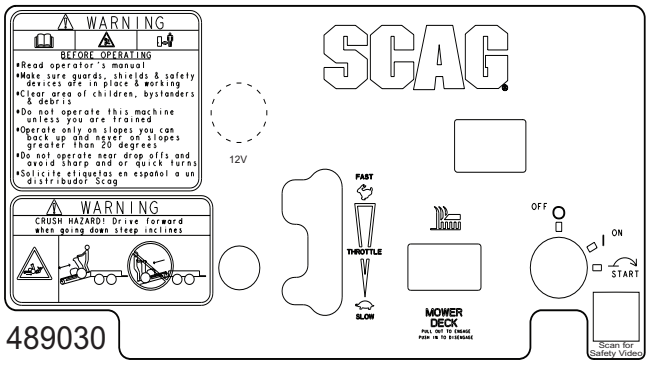

489030

2.8 SLOPE ANGLE GRAPH

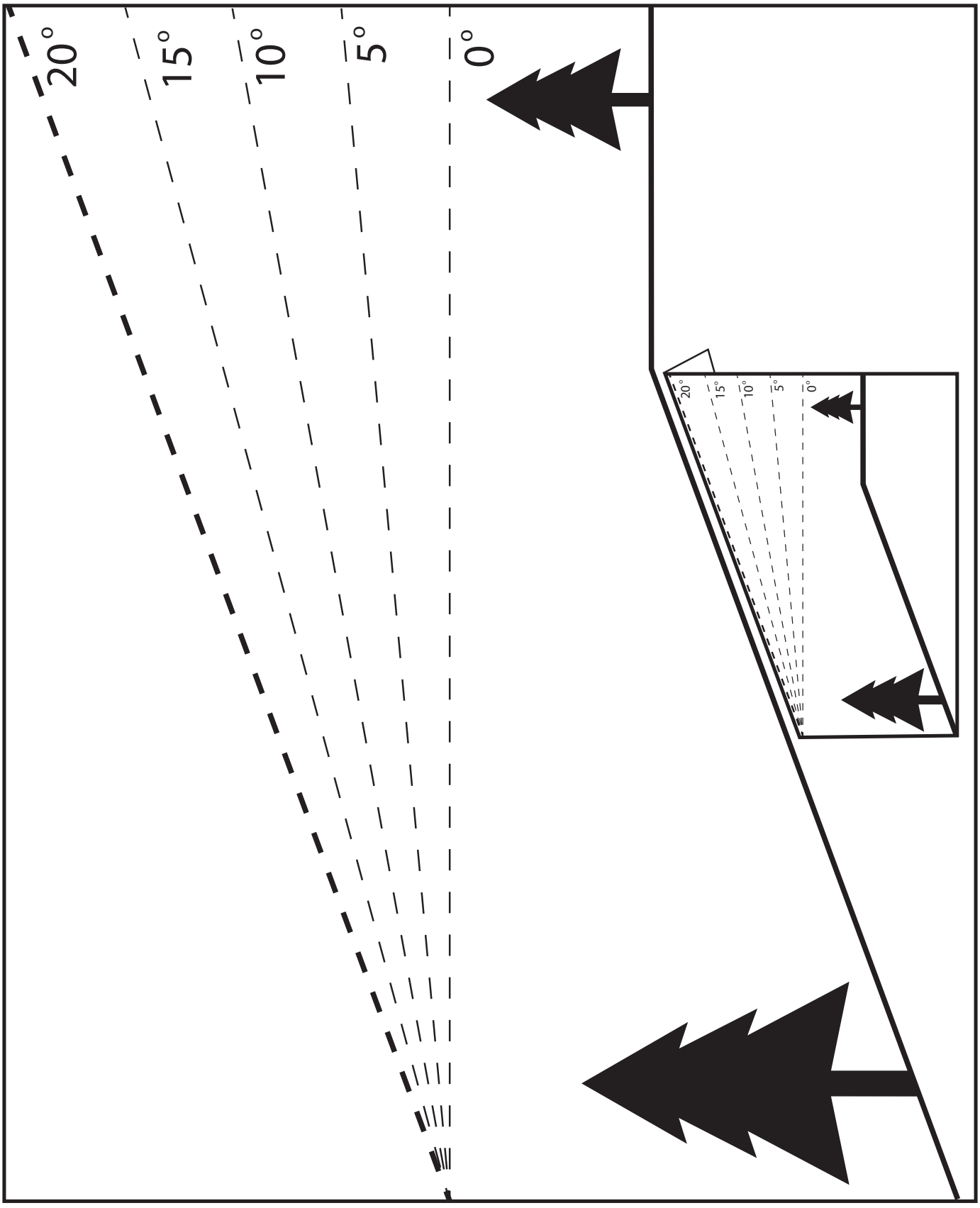

SPECIFICATIONS

3.1 ENGINE

General Type ..... Heavy-Duty Commercial Gasoline
Engine Model:
- Briggs & Stratton Vanguard 20CX 40T8770026G1
- Briggs & Stratton Vanguard 25CX 44T9770043G1
- Kawasaki 18FSE FS600V-T12-R
- Kawasaki 22FSE FS651V-DS10

Horsepower:
- Briggs & Stratton Vanguard 20CX ..... 20 HP
- Briggs & Stratton Vanguard 25CX ..... 25 HP
- Kawasaki 18FSE ..... 18.5 HP
- Kawasaki 22FSE ..... 22 HP

Displacement:
- Briggs & Stratton Vanguard 20CX 656cc
- Briggs & Stratton Vanguard 25CX 810cc
- Kawasaki 18FSE 603cc
- Kawasaki 22FSE 726cc

Idle Speed:
- Briggs & Stratton Vanguard 20CX / 25CX ..... 1750 RPM (±100 RPM)
- Kawasaki 18FSE / 22FSE ..... 1550 RPM (±150 RPM)

Full Speed:
- Briggs & Stratton Vanguard 20CX / 25CX ..... 3600 RPM (±100 RPM)
- Kawasaki 18FSE / 22FSE ..... 3600 RPM (±100 RPM)

Fuel Pump:
- Briggs & Stratton Vanguard 20CX / 25CX ..... Integral Fuel Pump
- Kawasaki 18 FSE / 22FSE ..... Pulse Fuel Pump

Fuel ..... Non-Leaded Gasoline with a Minimum Octane Rating of 87
Belts ..... Kevlar Cord (Self-Adjusting, Self-Tightening)

3.2 ELECTRICAL

Battery 12V
Charging Output ..... 12V, 20 Amp
System Polarity ..... Negative Ground
Interlock Switches ..... Operator Presence, Mower Engagement (PTO), Parking Brake
Instrument Panel ..... Inductive Hour Meter, Throttle Lever, Choke Control, PTO Switch, Ignition Key Switch, 12-Volt Power Plug
Fuses ..... Two (2) 20 Amp

3.3 DRIVE SYSTEM

Drive System ..... Hydraulic Drive with Two Integrated Zero-Turn Transaxles
Transaxles ..... Hydro-Gear™ ZT-3100
Steering/Travel Control ..... Twin Lever Steering Control with Individual Wheel Control
Parking Brake ..... Lever Actuated Linkage to Brakes on Both Drive Wheel Axles
Tires:
- (2) Front Caster ..... 11 x 4.00 - 5 Run-Flat Semi-Pneumatic
- (2) Drive ..... 20 x 8.00 - 10 Four-Ply Pneumatic Tubeless, Radius Edge

Tire Pressure:
- Front Caster ..... Semi-Pneumatic
- Drive ..... 8 PSI

Travel Speed:
- Forward ..... 7 MPH
- Reverse ..... 4 MPH

Fuel Tank Capacity ..... 6-3/4 Gallon

3.4 HYDRAULIC SYSTEM

Hydraulic Oil Filter ..... 40 Micron Spin-On Element Type
Hydraulic Oil Capacity ..... 2 Quarts per Transaxle (4 Quarts Total)
Hydraulic Expansion Reservoir ..... Nylon

3.5 CUTTER DECK

Type ..... Out-Front Design with Anti-Scalp Rollers
Construction ..... Tri-Plate Construction with 10-Gauge Top, 11-Gauge Spindle Reinforcement, and 7-Gauge Skirt

True Cutting Width:
- 36H ..... 36" (91.40 cm)
- 42H ..... 42" (106.68 cm)
- 48H ..... 48"(122.00 cm)
- 52H ..... 52" (132.00 cm)

Cutting Height Adjustment ..... Lever Adjustment from 1-1/2" to 4-1/2" in 1/4" Increments
Cutter Blades ..... 0.197 in. Thick, Milled Edge, Wear Resistant
Blade Engagement ..... Electric Blade Engagement Clutch with Control Panel Switch (Connected to Cutter Deck by Belt)
Discharge Opening ..... Extra-Wide Discharge Opening, Spring-Loaded Chute
Discharge Chute ..... Black, Polypropylene (Plastic)
Spindles ..... Heavy-Duty Spindle Shaft, Cast Aluminum Housing, Sealed Ball Bearing, Maintenance-Free
Spindle Pulleys ..... Split Steel with Tapered Locking Hub
Cutter Deck Belts ..... B-Section with Kevlar Cord (Self-Adjusting, Self-Tightening)
Electric Clutch Type ..... Ogura Heavy Duty PTO Clutch Brake

3.6 WEIGHTS AND DIMENSIONS

Cutter Deck	36H	42H	48H	52H
Length	65-1/4"	65-1/4"	65-1/4"	65-1/4"
Height	47"	47"	47"	47"
Tracking Width	36"	36"	36"	36"
Overall Width w/ Chute Down	48"	54.5"	60.5"	64.5"
Overall Width w/ Chute Up	37"	43"	49"	53"
Dry Weight	716#	730#	756#	794#
Wet Weight	757#	771#	797#	835#

3.7 PRODUCTIVITY

Cutting Width	36"	42"	48"	52"
Acres Per Day	12.4	14	18.6	20.2

The above chart will aid you in determining how many acres your V-Ride LS mower will cut per day. The chart is an estimate based on an eight-hour daily cutting time at a speed of 6 MPH, including a 20% allowance for overlap and turns.

OPERATING INSTRUCTIONS

⚠ CAUTION

Do not attempt to operate the machine before reading this manual. Become familiar with the location and purpose of all controls, instruments, operating practices, and safety decals before operating the machine.

4.1 CONTROLS AND INSTRUMENTS

Before operating the V-Ride LS mower, familiarize yourself with all mower controls and engine controls. Knowing the location, function, and operation of these controls is crucial for the safe and efficient operation of the machine.

1. **Ignition Switch (Figure 4-2):** The ignition switch is used to start the engine and has three positions: OFF, ON, and START.
2. **Engine Choke Control (Figure 4-2):** Controls the air pressure in the intake manifold. Only use when starting a cold engine.
3. **Engine Throttle Control (Figure 4-2):** Controls the engine speed. Pushing the lever forward increases the engine speed. Pulling the lever back decreases the engine speed. The furthest back position of the lever is the IDLE position. The furthest forward position of the lever is the cutting position.
4. **Mower Deck Switch (Figure 4-2):** Engages and disengages the mower deck drive system. Pulling the switch up will engage the deck drive. Pushing the switch down will disengage the deck drive.
5. **Inductive Hour Meter (Figure 4-2):** Indicates the number of hours the machine has been operated for.
6. **12V Power Plug (Figure 4-2):** An additional power supply for all your worksite needs.
7. **Fuse Holders (Figure 4-2):** Two 20-amp fuses protect the electrical system of the machine. Pull a fuse out of the socket to replace.
8. **Left Steering Control (Figure 4-2):** Controls power to the left wheel. See Section 4.5 for further information regarding ground travel and steering.
9. **Right Steering Control (Figure 4-2):** Controls power to the right wheel. See Section 4.5 for further information regarding ground travel and steering.
10. **Parking Brake Lever (Figure 4-2):** Engages and disengages the parking brakes while locking the steering levers in the neutral position. Move the lever back to engage the parking brake. Move the lever forward to disengage the parking brakes.
11. **Cutter Deck Lift Lever (Figure 4-2):** Raises and lowers the cutter deck.
12. **Cutting Height Adjustment (Figure 4-2):** Sets the cutter deck at the desired cutting height.
13. **Fuel Gauge (Figure 4-2):** Indicates the amount of fuel in the fuel tank.
14. **Fuel Shut-Off Valve (Figure 4-2):** Controls the fuel supply to the engine. Located on top of the fuel tank. Rotate counterclockwise to supply fuel to the engine. Rotate clockwise to shut off the fuel supply to the engine.
15. **Dump Valve Controls (Figure 4-1):** Located on the left and right side of the foot guard plate and used to "free-wheel" the mower. Pushing the levers in allows the machine to move under hydraulic power. Pulling the levers out allows the machine to be moved by hand (free-wheeling). See Figure 4-1.

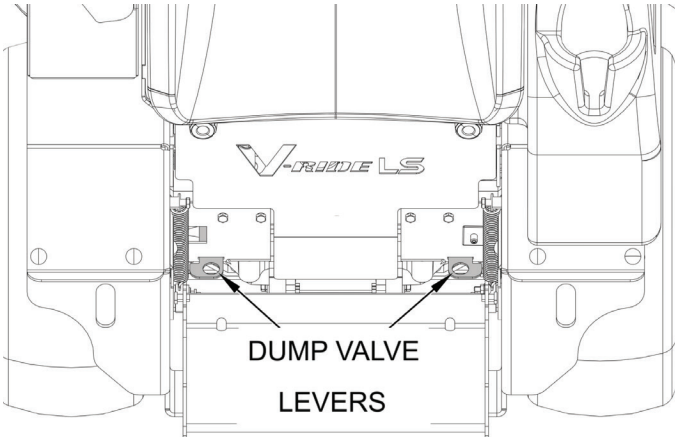

Figure 4-1. Dump Valve Location

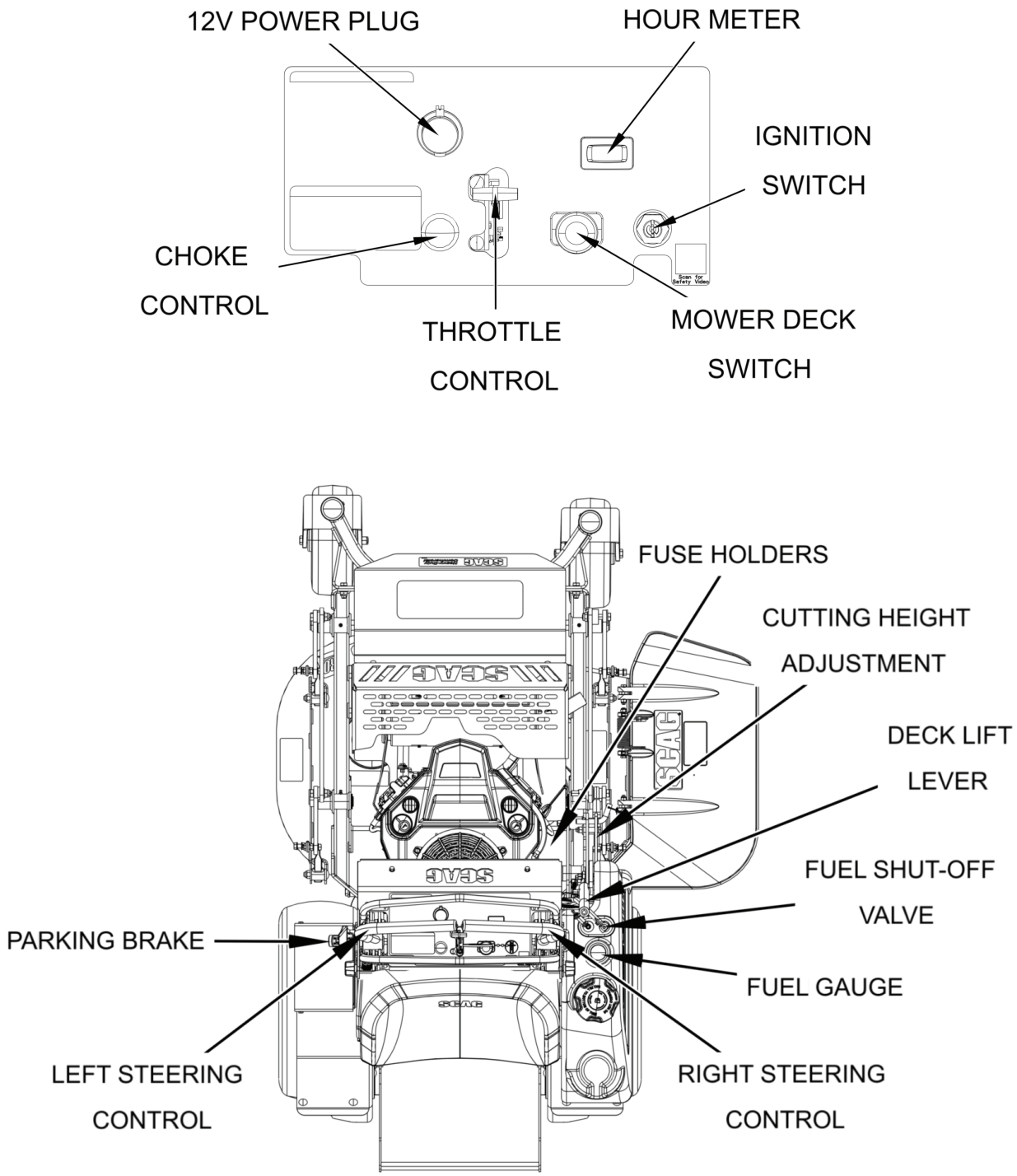

Figure 4-2. Controls and Instruments

4.2 SAFETY INTERLOCK SYSTEM

⚠ WARNING

This machine is equipped with a safety interlock system intended to protect the operator and others from injury.

This is accomplished by preventing the engine from starting unless the deck drive is disengaged, the parking brake is engaged, the steering control levers are in the neutral position, and the operator is in the operating position.

The safety interlock system will shut off the engine if the operator leaves the operator platform with the steering control levers not in the neutral position, with the cutter blades engaged, and without the parking brake engaged.

Never operate the machine with the interlock system disconnected, bypassed, or malfunctioning.

The safety interlock system should be tested before every use of the machine. If the safety interlock system does not operate as described below, contact your local Authorized Scag Dealer immediately to have the safety interlock system repaired. Do not operate the machine until the safety interlock system has been repaired.

NOTE

All V-Ride LS models will require the operator to start these procedures while off of the operator platform unless specified otherwise.

1. Place the steering control levers in the neutral position, engage the parking brake, and turn the PTO switch to the ON position. Stand on the operator platform and attempt to start the engine. The engine should not start.
2. Place the steering control levers in the neutral position, disengage the parking brake, and turn the PTO switch to the OFF position. Stand on the operator platform and attempt to start the engine. The engine should not start.
3. Place the steering control levers in the neutral position, engage the parking brake, and turn the PTO switch to the OFF position. Stand on the operator platform and start the engine. With the engine running, turn the PTO switch to the ON position and step backwards off of the operator platform. The engine should shut off.
4. Place the steering control levers in the neutral position, engage the parking brake, and turn the PTO switch to the OFF position. Stand on the operator platform and start the engine. With the engine running, disengage the parking brake and step backwards off of the operator platform. The engine should shut off.

4.3 INITIAL RUN-IN PROCEDURES

FIRST DAY OR 20 HOURS OF USE

1. Inspect the machine before each use for missing or damaged safety shields, guards, and decals. Repair or replace as needed.
2. Change the engine oil and oil filter after the first 20 hours of operation. See Section 7.5.
3. Check the hydraulic oil level in the hydraulic system reservoir. See Section 7.4.
4. Check all belts for proper alignment and wear at two, four, and eight hours of operation.
5. Check the safety interlock system before each use for proper operation. See Section 2.2 and 4.2.
6. Check tire pressure and adjust as necessary. See Section 7.11.
7. Check for loose hardware and tighten as necessary.

4.4 STARTING THE ENGINE

⚠ CAUTION

Never use starting fluids with this machine. The use of starting fluids in the air intake system may cause explosions or a "runaway" engine condition, which can result in engine damage and personal injury.

1. Ensure the fuel shut-off valve, located on top of the fuel tank, is completely open. See Figure 4-3.

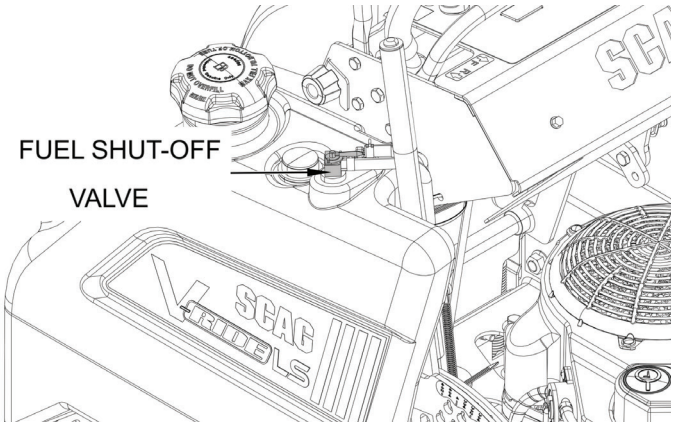

Figure 4-3. Fuel Valve Location

2. Stand in the operating position before attempting to start the machine.
3. Engage the parking brake.
4. Ensure that the steering control levers are in the neutral position.
5. Ensure that the cutter deck is disengaged.
6. If the engine is cold, choke the engine as needed using the engine choke control.
7. Move the engine throttle control to half engine speed.
8. Turn the ignition key to the START position to start the engine.
9. Allow the engine to warm up before operating the machine.

4.5 GROUND TRAVEL AND STEERING

IMPORTANT

If you are not familiar with the operation of a machine with lever steering or hydrostatic transmissions, the steering and ground speed controls of this machine should be learned and practiced in an open area away from buildings, fences, or obstructions. Practice these controls until you are comfortable with the handling of the machine before beginning work.

Do not operate this machine on slopes until you are comfortable operating on flat surfaces.

IMPORTANT

Always practice with a slow engine speed and slow rate of forward travel.

Obtain a smooth operating action by learning to feather the steering controls.

Practice operating this machine until you are thoroughly familiar and comfortable with the controls before beginning work.

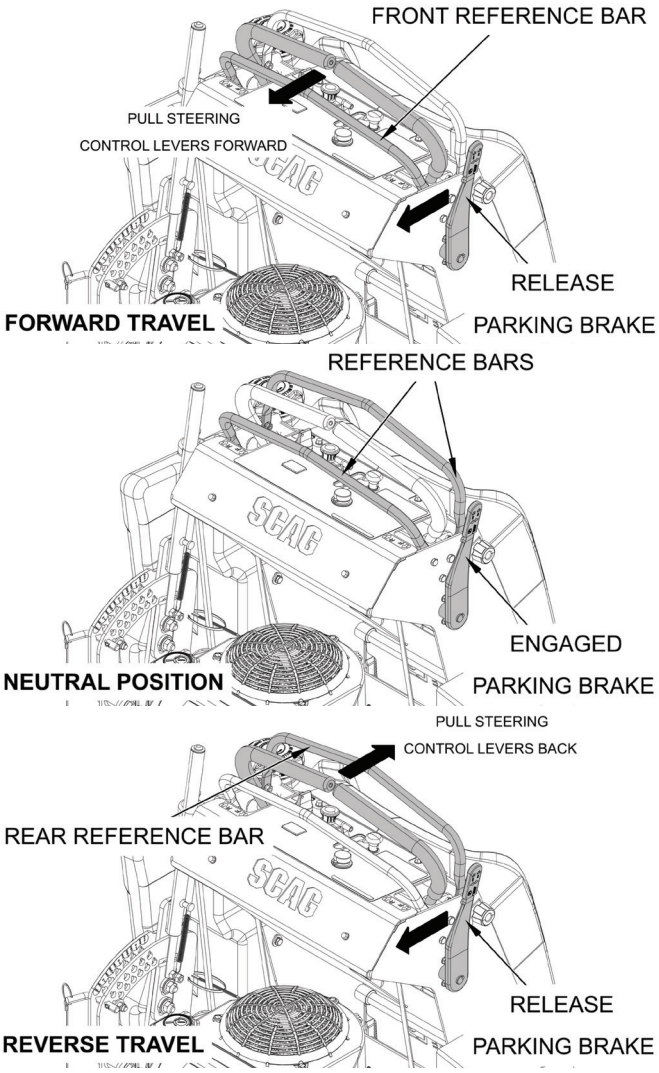

Figure 4-4. Travel Controls

FORWARD TRAVEL

To travel forward with the machine, disengage the parking brake, use the front reference bar as an anchor point for your hands, and slowly pull both steering control levers forward an equal distance. The further forward the

steering control levers are pulled, the greater the forward speed of the machine will be. See Figure 4-4.

To increase the forward speed of the machine, pull both steering control levers forward. To decrease the forward speed of the machine, allow both steering control levers to return toward the neutral position.

NOTE

Smooth operation of the steering control levers will result in a smooth operation. Maintain a low and consistent travel speed while learning the operation of the steering controls.

To steer the machine to the left while traveling forward, allow the left steering control lever to move back toward the neutral position. The further the steering control lever is allowed to move back, the quicker the machine will turn left.

To steer the machine to the right while traveling forward, allow the right steering control lever to move back toward the neutral position. The further the steering control lever is allowed to move back, the quicker the machine will turn right.

To stop the forward travel of the machine, allow both steering control levers to return to the neutral position. Engage the parking brake if the machine is to be parked.

REVERSE TRAVEL

⚠ CAUTION

Be aware of obstacles and obstructions before traveling in reverse. Clear the area of bystanders before operating this machine. Possible injury or property damage may occur if proper precautions are not taken before traveling in reverse.

To travel in reverse with the machine, use the rear reference bar as an anchor point for your hands and slowly pull both steering control levers back an equal distance. The further back the steering control levers are pulled, the greater the reverse speed of the machine will be. Keep the travel speed low at all times when traveling in reverse. See Figure 4-4.

To steer the machine to the left while traveling in reverse, allow the left steering control lever to move forward toward the neutral position. The further the steering control lever is allowed to move forward, the quicker the machine will turn left.

To steer the machine to the right while traveling in reverse, allow the right steering control lever to move forward toward the neutral position. The further the steering control lever is allowed to move forward, the quicker the machine will turn right.

To stop the reverse travel of the machine, allow both steering control levers to return to the neutral position. Engage the parking brake if the machine is to be parked.

SLOPE OPERATION

⚠ WARNING

Never operate the machine on slopes greater than 20 degrees. See Section 2.9 or download a slope indicator app on your mobile device to determine approximate slope angles. Always follow OSHA-approved operation.

The V-Ride LS mower has been designed for good traction and stability under normal working conditions. However, the operator must use caution when traveling on slopes or poor ground conditions, such as wet grass. See Section 2.3 for additional information.

1. Use extreme caution while operating the machine on any slope or uneven surface.
2. Be aware of obstacles at the base of and on the slope. Do not operate the machine near drop-offs, ditches, embankments, or bodies of water. Remove any hazards before operation, or keep at least two cutting widths between the machine and the hazard.
3. Mark uneven terrain (holes, bumps, roots, rocks, ruts, soft turf, etc.) before operation. Uneven terrain may cause instability and overturn the machine.

4. Always operate on slopes with the heavy end of the machine facing uphill.
5. Reduce speed and use extreme caution on slopes and in sharp turns to prevent instability, loss of control, and tipping. Be especially cautious when changing directions on slopes.
6. Avoid starting and stopping on slopes. Keep all movements on slopes slow and gradual. If the machine loses traction, proceed slowly down the slope.
7. Do not operate the machine in conditions with questionable traction, steering, or stability. Do not mow wet grass, as the reduced traction may cause sliding and a loss of braking and steering.
8. Never park the machine on slopes or uneven terrain.
9. If you lose control of the machine, step off and away from the direction of travel of the machine.

4.6 OPERATING THE CUTTER DECK

1. Set the throttle at three-quarters (3/4) speed.

IMPORTANT

Do not attempt to engage the cutter deck drive at high speeds. Engaging the cutter deck drive at high speeds will shorten the electric clutch life.

2. Engage the cutter deck drive by pulling the yellow PTO switch, located on the instrument panel, up. See Figure 4-2 and Figure 4-5.

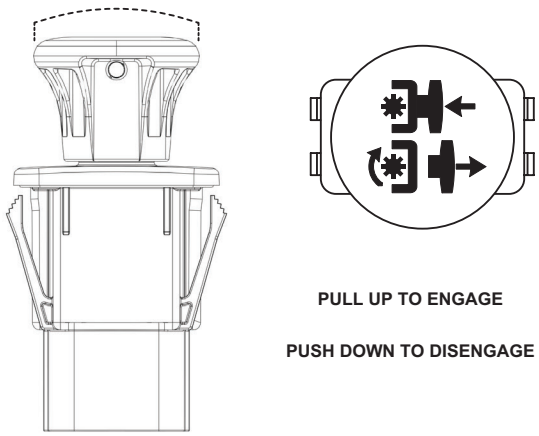

Figure 4-5. PTO Switch Function

NOTE

Engaging and disengaging the cutter deck drive may produce a squealing noise. This is normal and caused by electric clutch plates meshing as the mower comes up to speed.

⚠ WARNING

Disengage power to the cutter deck before traveling in reverse. Do not mow in reverse unless absolutely necessary. If you must mow in reverse, observe the entire area behind the machine before proceeding. Mow slowly and maintain constant awareness of the area behind the machine.

3. Always operate the engine at full throttle after the cutter deck drive has been engaged to maintain the cutting speed.
4. If the engine starts to lug down, reduce your forward travel speed and allow the engine to operate at the maximum RPM.
5. Disengage the cutter deck drive by pushing the yellow PTO switch in.

4.7 PARKING THE MACHINE

1. Park the machine only on flat and level surfaces. Do not park the machine on an incline
2. Place the steering control levers in the neutral position.
3. Disengage the cutter deck.
4. Slow the engine to the IDLE speed.
5. Engage the parking brake.
6. Turn the ignition key to the OFF position to shut off the engine. Remove the key.

4.8 POST-OPERATION PROCEDURES

DANGER

Avoid serious injury from burns by allowing the machine to cool before performing any post-operation procedures. Do not remove the fuel tank cap and refuel while the machine is running or immediately after stopping. Do not touch the engine or muffler while the machine is running or immediately after stopping.

1. Wash the machine after each use. Do not use a high-pressure washer or spray directly onto electrical components.

   IMPORTANT

   Do not wash a running or hot engine. Cold water will damage the engine. Use compressed air to clean the engine.

2. Clean dirt, grass, leaves, excessive grease, and oil from cutter decks, drives, muffler, and engine after use to reduce fire hazards.
3. Ensure the entire machine is clean to inhibit serious heat damage to the engine or hydraulic oil circuit.
4. After the machine has cooled down, fill the fuel tank with fresh, clean fuel. See the Engine Owner's Manual for proper octane requirements.
5. Check all belts for proper alignment and signs of wear. Adjust and replace as necessary.
6. Check tire pressure and adjust as necessary. See Section 7.11.

REMOVING CLOGGED MATERIAL

1. If the mower discharge becomes clogged, do not attempt to clear the obstruction while the machine is running. Shut off the engine, remove the key, and wait for all movement to stop before proceeding.

DANGER

ROTATING BLADES

Never use hands to dislodge a clogged discharge chute. Use a stick or other device to remove any obstructions after the engine and cutter blades have stopped moving.

4.9 MOVING A NON-RUNNING MOWER

To "free-wheel" the mower and move around without the engine running, place the dump valve levers in the FREE-WHEEL position. See Figure 4.4. Disengage the parking brake and move the mower by hand. The dump valve levers must be returned to the DRIVE position before operating the mower.

If the mower becomes stuck, pull the machine back into a stable position using both front tie-down points or both rear tie-down points simultaneously. See Figure 2-2 and Figure 2-3.

4.10 ADJUSTING THE CUTTING HEIGHT

The cutter deck can be adjusted from a height of 1-1/2 inches to 4-1/2 inches at 1/4-inch intervals.

WARNING

Never raise the cutter deck or adjust the cutting height with the cutter deck engaged. Disengage power to the cutter deck drive, place the steering control levers in the neutral position, and apply the parking brake. Wait for all movement to stop then adjust cutting height.

1. Disengage the cutter deck drive.
2. Pull the cutter deck lift lever all the way backward until it locks in place. See Figure 4-6.

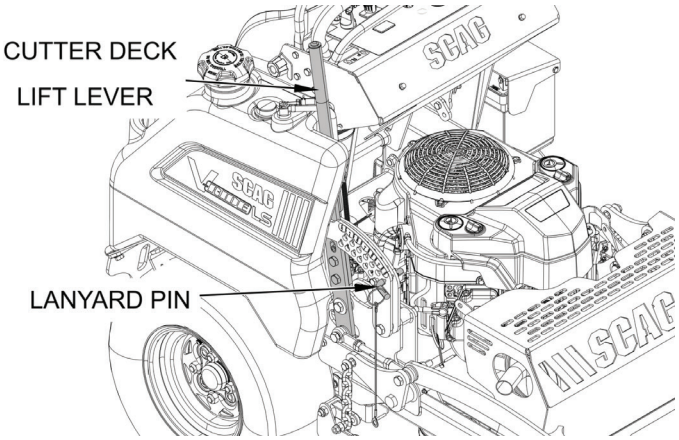

Figure 4-6. Adjusting Cutting Height

3. Insert the lanyard pin into the cutting height index at your desired cutting height.
4. Pull backward on the cutter deck lift lever and hold the lock button. See Figure 4-6.
5. Slowly release the cutter deck lift lever.

NOTE

A deck height decal is located on the cutting height index to aid in adjusting the cutting deck to your desired height.

4.11 MOWING RECOMMENDATIONS

⚠ WARNING

Do not operate the machine without the side discharge chute installed and in the down position. Ensure any optional grass catcher, mulch plate, or Operator Controlled Discharge Chute (OCDC) is completely installed before operating the machine.

1. Do not mow with dull cutter blades. A dull blade will tear grass, resulting in a reduced mowing power and poor lawn appearance.
2. Do not operate the machine with the discharge chute removed. Keep the discharge chute in the lowest position to deflect grass clippings and thrown objects downward.
3. Direct any side discharge away from sidewalks and streets to minimize the clean up of clippings.
4. When mowing close to obstacles, direct discharge away from those obstacles to reduce the chance of property damage by thrown objects.
5. Cut grass when it is dry and not too tall. Only cut off 1/3 or less of existing grass for the best appearance.
6. Operate the engine at full throttle for the best cut. A low RPM causes the mower to tear the grass when cut. The engine is designed to be operated at full throttle for maximum efficiency.
7. Use the alternate stripe mowing pattern for the best lawn appearance. Vary the stripe direction each time the grass is mowed to avoid wear patterns.
8. When mowing wet or tall grass, mow twice. Raise the cutter deck to the highest setting for the first pass, then adjust the cutter deck to your desired height for the second pass.
9. Use a slow travel speed for trimming purposes.
10. Keep the mower and discharge chute clean.

TROUBLESHOOTING CUTTING CONDITIONS

CONDITION	CAUSE	CURE
STRINGERS OCCASIONAL BLADES OF UNCUT GRASS 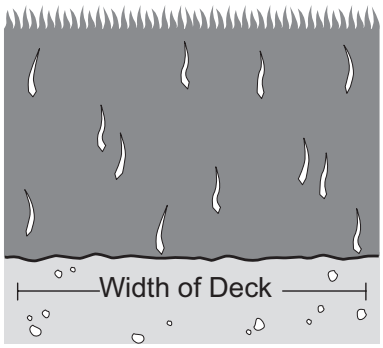	Low engine RPM	Run engine at full RPM
	Ground speed too fast	Slow speed to adjust for conditions
	Wet grass	Cut grass after it has dried out
	Dull blades, incorrect sharpening	Sharpen blades
	Deck clogged, grass accumulation	Clean underside of deck
	Belts slipping	Adjust belt tension
STREAKING STRIPS OF UNCUT GRASS IN CUTTING PATH 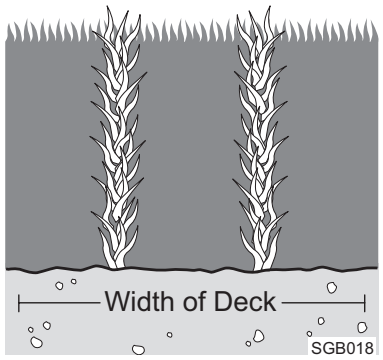	Dull, worn blades	Sharpen blades
	Incorrect blade sharpening	Sharpen blades
	Low engine RPM	Run engine at full RPM
	Belt slipping	Adjust belt tension
	Deck clogged, grass accumulation	Clean underside of deck
	Ground speed too fast	Slow speed to adjust for conditions
	Wet grass	Cut grass after it has dried out
	Bent blades	Replace blades
STREAKING STRIPS OF UNCUT GRASS IN CUTTING PATH 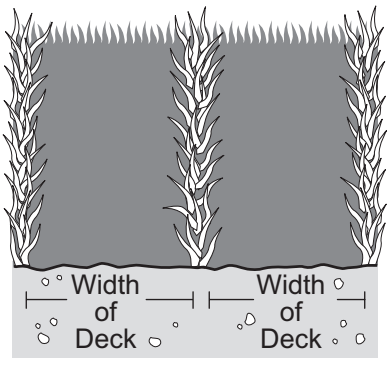	Not enough overlapping between rows	Increase the overlap of each pass

CONDITION	CAUSE	CURE
UNEVEN CUT ON FLAT GROUND WAVY HIGH-LOW APPEARANCE, SCALLOPED CUT, OR ROUGH CONTOUR 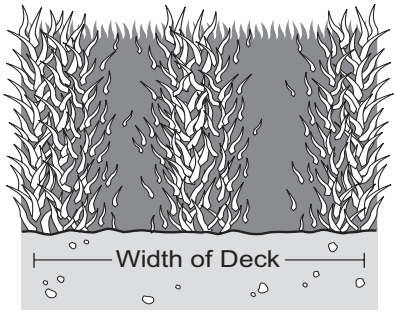	Lift worn from blade	Replace blade
	Blade upside down	Mount with cutting edge toward ground
	Deck plugged, grass accumulation	Clean underside of deck
	Too much blade angle (deck pitch)	Adjust pitch and level
	Deck mounted improperly	See your authorized SCAG dealer
	Bent spindle area	See your authorized SCAG dealer
	Dull blade	Sharpen blade
UNEVEN CUT ON UNEVEN GROUND WAVY APPEARANCE, HIGH-LOW SCALLOPED CUT, OR ROUGH CONTOUR 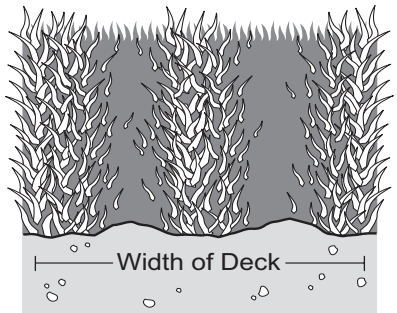	Uneven ground	May need to reduce ground speed, raise cutting height, and/or change direction of cut
SLOPING RIDGE ACROSS WIDTH OF CUTTING PATH 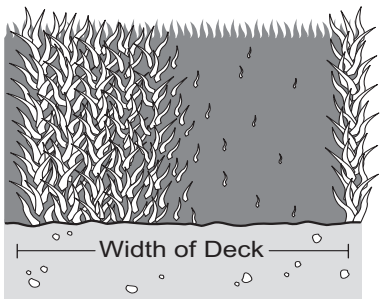	Tire pressures not equal	Check and adjust tire pressure
	Wheels uneven	Check and adjust tire pressure
	Deck mounted incorrectly	See your authorized SCAG dealer
	Deck not level side-to side	Check for level and correct

CONDITION	CAUSE	CURE
SCALPING BLADES HITTING DIRT OR CUTTING VERY CLOSE TO THE GROUND 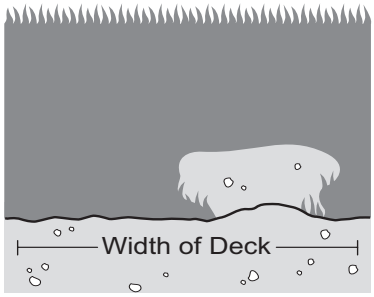	Low tire pressures	Check and adjust pressures
	Ground speed too fast	Slow speed to adjust for conditions
	Cutting too low	May need to reduce ground speed, raise cutting height, change direction of cut, and/or change pitch and level
	Rough terrain	May need to reduce ground speed, raise cutting height, and/or change direction of cut
	Wet grass	Cut grass after it has dried out
STEP CUT RIDGE IN CENTER OF CUTTING PATH 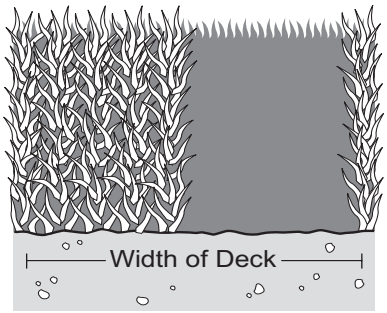	Blades not mounted evenly	Adjust pitch and level
	Bent blade	Replace blade
	Internal spindle failure	See your authorized SCAG dealer
	Mounting of spindle incorrect	See your authorized SCAG dealer
SLOPE CUT SLOPING RIDGES ACROSS WIDTH OF CUTTING PATH 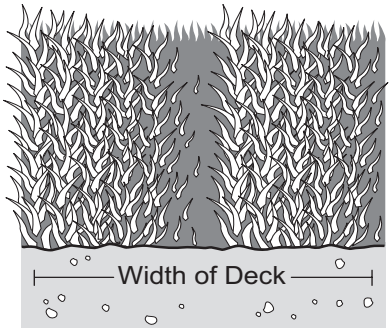	Bent spindle mounting area	See your authorized SCAG dealer
	Internal spindle failure	See your authorized SCAG dealer
	Bent deck housing	See your authorized SCAG dealer

ADJUSTMENTS

6.1 PARKING BRAKE ADJUSTMENT

⚠ WARNING

Do not operate the machine if the parking brake is inoperable. Severe injury may result.

Adjust the parking brake whenever the engaged parking brake lever does not hold the mower properly. If unable to engage the parking brake properly after following the procedures below, contact your Authorized Scag Dealer for further brake adjustments.

⚠ CAUTION

Adjust the parking brake only enough to hold the machine. Excessive force may damage the tires, brake components, or machine.

1. Park the machine on a level surface and block the wheels to prevent the machine from moving.
2. Release the parking brake lever.
3. Look for a 1/4" gap between the left drive tire and the brake weldment. See Figure 6-1.
4. Loosen the hardware securing the brake weldment to the brake actuator shaft weldment.
5. Adjust the brake weldment until there is a 1/4" gap between the drive tire and brake weldment.
6. Tighten the hardware securing the brake weldment to the brake actuator shaft weldment.
7. Repeat this procedure on the right drive tire.

NOTE

If this procedure does not achieve a proper brake adjustment, contact your Authorized Scag Dealer for further brake adjustments.

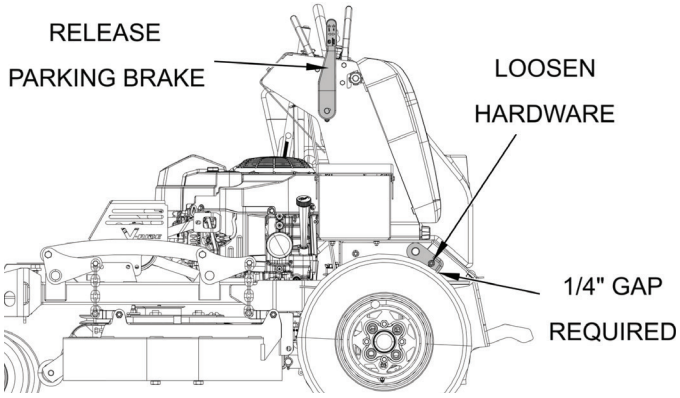

Figure 6-1. Parking Brake Adjustment

6.2 TRAVEL ADJUSTMENT

A **neutral adjustment** is required if the machine creeps forward or backward with the steering control levers in the neutral position.

A **tracking adjustment** is required if the machine pulls to one side while traveling forward with both steering control levers in the forward position.

NEUTRAL ADJUSTMENT

NOTE

Neutral has been set by your Authorized Scag Dealer at the time of mower set up and does not normally need to be adjusted. If, however, you find that the neutral has come out of adjustment, follow the procedure below.

1. Ensure both dump valve levers are in the DRIVE position and the steering control levers are in the neutral position.
2. With an operator in the operating position, park the machine on a level surface, start the engine, and disengage the parking brake.
3. Run the engine at full operating speed and check if the machine creeps forward or backward.
4. Adjust the left drive tire by loosening the jam nuts on the steering control rod and turning the rod until the drive tire turns in the forward direction. Turn the rod back until the drive tire stops moving, then turn the rod an additional half (1/2) turn. See Figure 6-2.

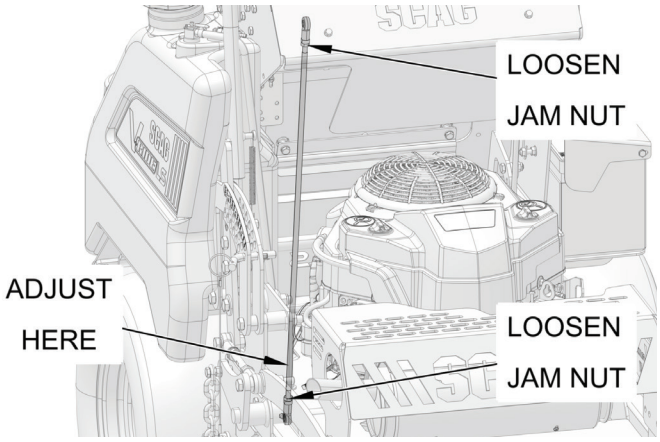

Figure 6-2. Tracking Adjustment

5. Repeat the adjustment procedure for the right drive tire and steering control rod.
6. Actuate the steering control levers several times in both directions. Return them to the neutral position.
7. Confirm that the drive tires remained in neutral and readjust if necessary.

TRACKING ADJUSTMENT

⚠ CAUTION

Stop the engine and remove the key before making any adjustments. Wait for all movement to stop before proceeding.

⚠ CAUTION

Avoid injury from burns by allowing the machine to cool before performing any adjustments. The engine, muffler, and drive unit can get hot during operation of the machine.

NOTE

Ensure that the caster wheels turn freely and that the tire pressure is correct before proceeding with this adjustment. If the tire pressure is not correct, the machine will pull to the side with lower pressure.

If the machine pulls right when traveling at full speed, it is an indication that the left wheel is turning faster than the right wheel. To correct this condition, adjust the left control rod using the following procedure:

1. Stop the machine and place the steering control levers in the neutral position.
2. Loosen the lock nuts securing the ball joints at each end of the left steering control rod.
3. Rotate the control rod to lengthen the rod. This will cause the control rod to stroke the left pump less and slow down the left wheel. See Figure 6-2.
4. Tighten the lock nuts to secure the ball joints at each end of the left steering control rod.

NOTE

If the machine creeps forward or backward after making a tracking adjustment, a neutral adjustment will be required to correct the condition.

If the machine pulls left when traveling at full speed, it is an indication that the right wheel is turning faster than the left wheel. To correct this condition, adjust the right control rod using the following procedure:

1. Stop the machine and place the steering control levers in the neutral position.
2. Loosen the lock nuts securing the ball joints at each end of the right steering control rod.
3. Rotate the control rod to lengthen the rod. This will cause the control rod to stroke the right pump less and slow down the right wheel. See Figure 6-2.
4. Tighten the lock nuts to secure the ball joints at each end of the right steering control rod.

NOTE

If the machine creeps forward or backward after making a tracking adjustment, a neutral adjustment will be required to correct the condition.

6.3 THROTTLE & CHOKE ADJUSTMENT

Throttle control and choke control adjustments must be performed by an Authorized Scag Dealer to ensure proper and efficient running of the engine. Should your throttle control or choke control need an adjustment, contact your Authorized Scag Dealer.

6.4 BELT ADJUSTMENTS

All drive belts and cutter deck belts are spring-loaded and self-tensioning. During the initial run-in of the machine, check the drive belt for proper alignment and wear after the first 2, 4, 8, and 10 hours of operation. Thereafter, check the drive belt after every 40 hours of operation or weekly, whichever occurs first.

⚠ WARNING

Shut off the engine and remove the key before removing any shields or safety guards. Wait for all movement to stop before proceeding.

⚠ WARNING

Steering control will be lost if the drive belt fails, which may result in serious injury or death. Replace the drive belt as needed, after 400 hours of operation, or every two years, whichever occurs first.

IMPORTANT

If you experience frequent belt wear or breakage, see your Authorized Scag Dealer service center for a belt adjustment.

6.5 CUTTER DECK ADJUSTMENTS

The cutter deck level, pitch, and height have been set at the factory. However, if these adjustments ever need to be made to your mower, follow the procedures below.

NOTE

Ensure that all tires are inflated to the proper tire pressure before adjusting the cutter deck.

All measurements must be taken from the top edge of the cutter deck as the bottom edge is uneven.

CUTTER DECK LEVEL

The cutter deck level must be level from side-to-side for the proper cutting performance. To check the cutter deck level, ensure that the mower is parked on a level surface, the tires are inflated to the proper tire pressure, and the cutter deck is adjusted to the most common cut height that you will use.

On the right side of the machine, check the distance from the top of the cutter deck to the floor. Repeat this process for the left side of the machine. If the right and left side measurements are different, the cutter deck level must be adjusted using the following procedure.

1. Loosen the elastic stop nuts securing the deck level links on the front and rear of the lower side. See Figure 6-3.

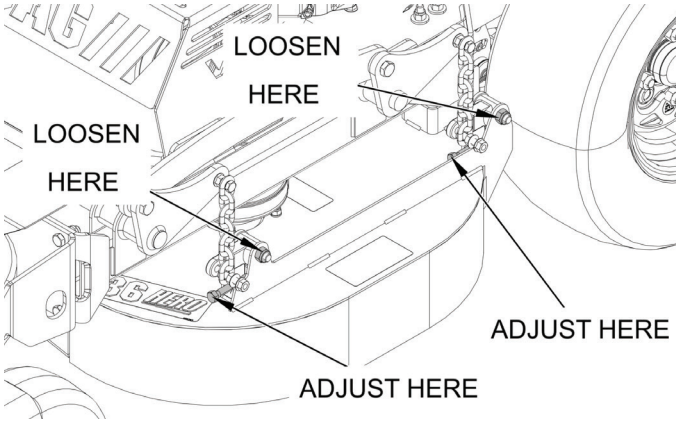

Figure 6-3. Cutter Deck Level Adjustment

2. Turn the adjustment bolts on the front and rear deck level links clockwise until the cutter deck is level between both sides. See Figure 6-3.
3. Tighten the elastic stop nuts to secure the front and rear deck level links. This secures the cutter deck in the proper position. See Figure 6-3.

CUTTER DECK PITCH

The cutter deck pitch must be level from front-to-rear for the proper cutting performance. To check the cutter deck pitch, ensure that the mower is parked on a level surface, the tires are inflated to the proper tire pressure, and the cutter deck is adjusted to the most common cut height that you will use.

At the rear right side of the machine, check the distance from the top of the cutter deck, directly behind the cutter deck hanging chains, to the floor. Repeat this process for the front right side of the machine. When finished, repeat these two measurements for the left side of the machine.

If the front and rear side measurements are different, the cutter deck pitch must be adjusted using the following procedure.

1. Loosen the elastic stop nuts securing the deck level links on the front of the cutter deck on both sides of the machine. See Figure 6-4 and Figure 6-5.

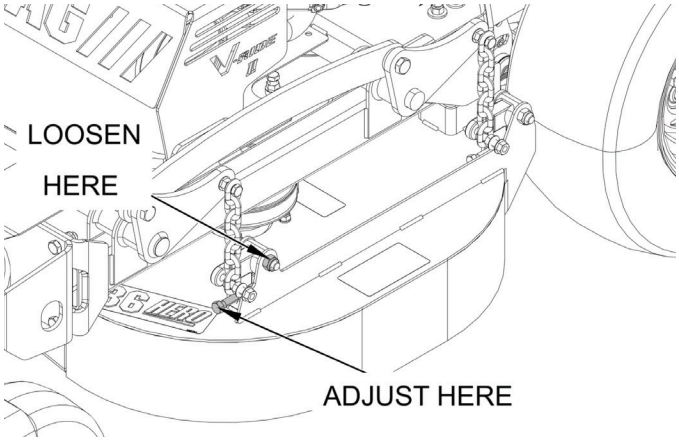

Figure 6-4. Cutter Deck Pitch Adjustment

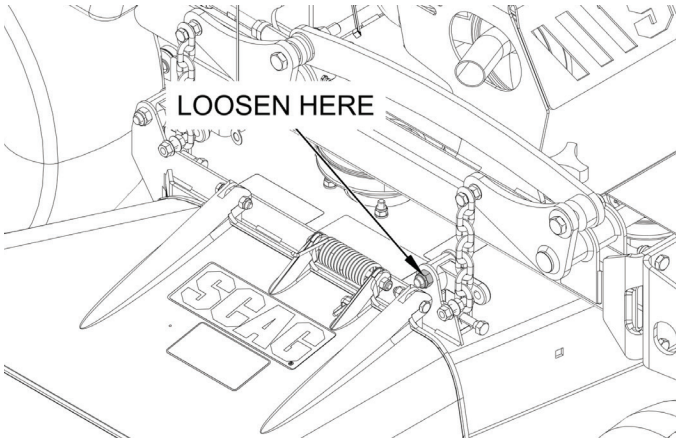

Figure 6-5. Cutter Deck Pitch Adjustment

2. Turn the adjustment bolts on both front deck level links clockwise to raise the front of the cutter deck, or counterclockwise to lower the front of the cutter deck. Adjust until the measurements are equal.
3. Tighten the elastic stop nuts to secure both front deck level links. This secures the cutter deck in the proper position. See Figure 6-4 and Figure 6-5.

IMPORTANT

To prevent the cutter deck from teetering, all four cutter deck hanging chains must have tension. If all four hanging chains do not have tension and the cutter deck teeters, you must readjust the cutter deck using the procedures outlined above.

CUTTER DECK HEIGHT

The cutter deck height must be adjusted to ensure that the cutter deck is cutting properly at the height indicated on the cutting height index gauge. To check the cutter deck height, ensure that the mower is parked on a level surface, not running without the key in the ignition, and the tires are inflated to the proper tire pressure.

1. Place the lanyard pin in the 3" position on the cutting height index.
2. Release the cutter deck from the transport position and allow the deck to move to the 3" cutting height position.
3. Rotate the cutter blade on the left side of the cutter deck. Position the cutter blade so it is facing front-to-back on the machine.

⚠ WARNING

Wear hand and eye protection when working with cutter blades.

4. Measure the distance from the floor to the front and rear tips on the left side of the cutter blade. If the measurement is not 3", the cutter deck adjustment lever must be adjusted using the following procedure:

   A: Loosen the elastic stop nuts securing the deck level links on the front and rear of the cutter deck. See Figure 6-3.

   B: Turn the adjustment bolts on the front and rear deck level links clockwise to raise the cutter deck, or counterclockwise to lower the cutter deck. Adjust until the measurements are equal.

C: Tighten the elastic stop nuts to secure the front and rear deck level links. This secures the cutter deck in the proper position. See Figure 6-3.

5. Repeat this process to confirm the measurement on the right side of the cutter deck.

6.6 ELECTRIC CLUTCH ADJUSTMENT

The electric clutch serves two functions in the operation of the mower. In addition to starting and stopping power flow to the cutter blades, the clutch also acts as a brake to assist in stopping blade rotation when the PTO switch is off or the operator presence circuit is interrupted.

When the clutch is disengaged, the air gap between the armature and the rotor must be adjusted to fifteen thousandths of an inch (0.015") for proper operation of the mower. The air gap adjustment is made using three bolts on the clutch. There are three inspection windows located next to each adjustment bolt. See Figure 6-6.

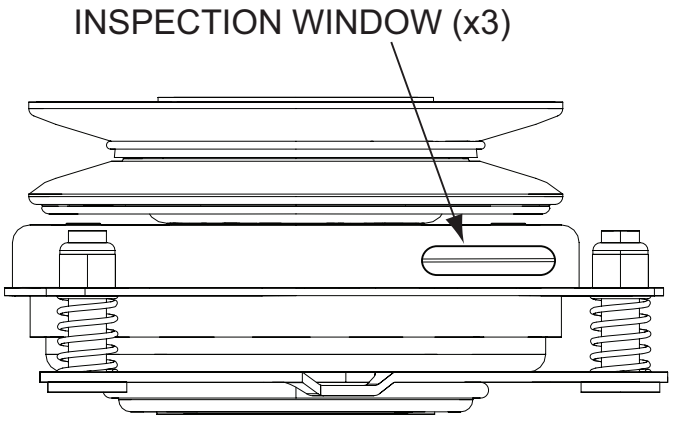

Figure 6-6. Clutch Air Gap Adjustment

1. Locate the inspection window on the clutch.
2. Place a 0.015" feeler gauge between the rotor and the armature. See Figure 6-7.
3. Tighten or loosen the adjusting bolt as needed to achieve the 0.015" air gap. See Figure 6-8.
4. Repeat this process at the remaining two inspection windows on the clutch.
5. Confirm that the air gap has been adjusted to 0.015" at all three inspection windows on the clutch.

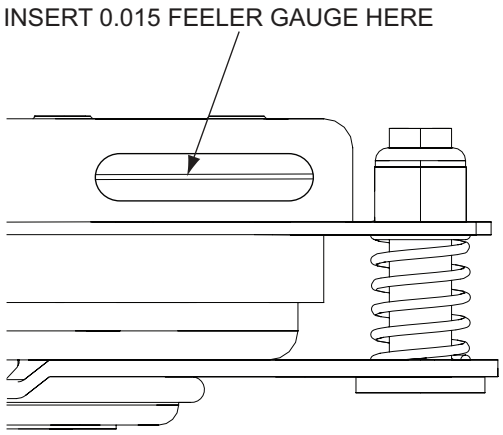

Figure 6-7. Clutch Inspection Window

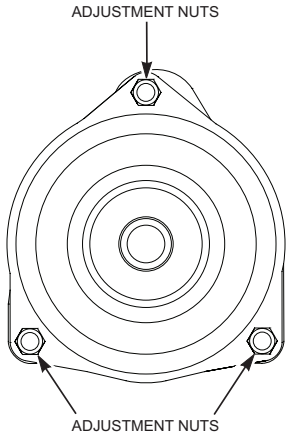

Figure 6-8. Clutch Adjustment Bolts

6.7 OPERATOR PLATFORM ADJUSTMENT

The operator suspension platform can be adjusted to optimize the comfort and ride of the machine. Adjust the suspension rate by moving the mounting position of the rubber isolators. Stiffen the suspension by adjusting the mounting position of the rubber isolators back. Soften the suspension by adjusting the mounting position of the rubber isolators forward. See Figure 6-9.

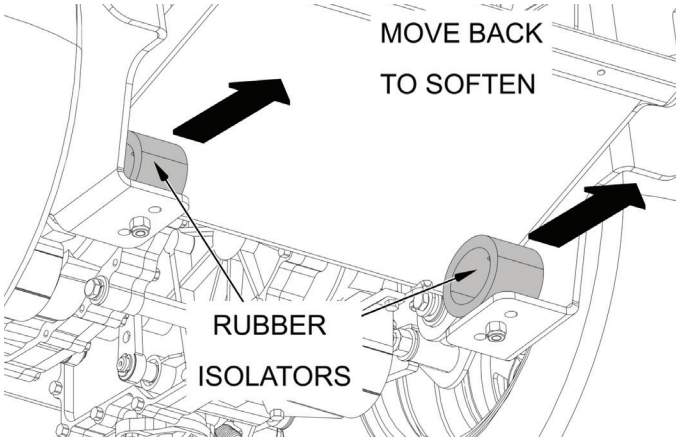

Figure 6-9. Operator Platform Suspension Adjustment

6.8 ACCESSING INTERNAL COMPONENTS

⚠ WARNING

Shut off the engine and remove the ignition key before removing any covers, hoods, shields, guards, plates, or screens. Wait for all movement to stop and allow for the engine to cool to avoid personal injury.

Under no circumstances should the machine be operated without these devices in place.

REMOVING THE OPERATOR CUSHION

1. Remove the two (2) knobs securing the cushion bracket to the machine. See Figure 6-10.
2. Lift the cushion bracket off the machine.

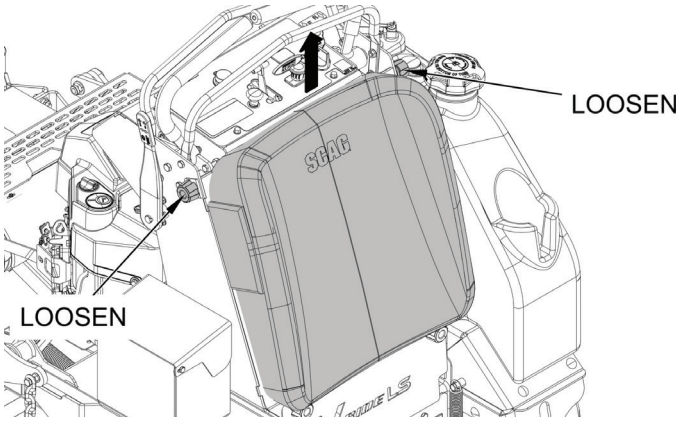

Figure 6-10. Operator Cushion Removal

REMOVING THE FOOT GUARD

1. Remove the two (2) knobs securing the foot guard to the machine. See Figure 6-11.
2. Lift the foot guard off the machine.

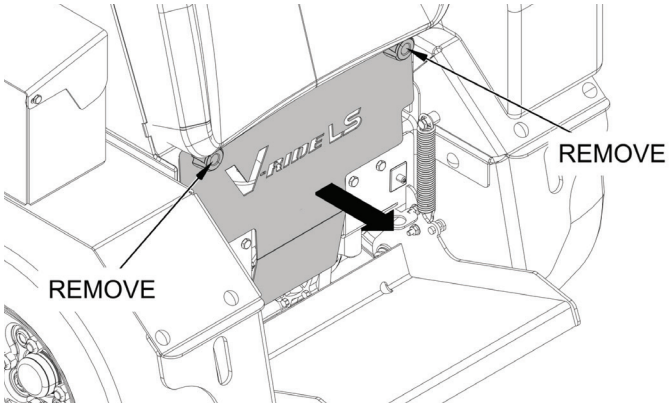

Figure 6-11. Foot Guard Removal

MAINTENANCE

7.1 RECOMMENDED MAINTENANCE INTERVALS

HOURS						PROCEDURE	COMMENTS
BREAK-IN (FIRST 10)	8	40	100	200	500		
X						Check all hardware for tightness.	
X						Check fuel level.	See Section 7.6
X						Check hydraulic oil level.	See Section 7.4
X						Inspect drive belt for proper alignment and wear after 2, 4, 8, and 10 hours of operation.	See Section 7.9
See Engine Owner's Manual						Change engine oil and oil filter.	See Section 7.5
See Engine Owner's Manual						Change engine fuel filter.	See Section 7.6
	X					* Clean mower.	
	X					Check hydraulic fittings and hoses for leaks.	Use extreme caution when checking hydraulic hoses and fittings. See Section 2.4 & 7.4
	X					Check engine oil level.	See Section 7.5
	X					* Clean air filter element.	See Section 7.7
	X					Lubricate grease fittings.	See Section 7.3
						Lubricate front caster wheel bearings.	See Section 7.3
						Check safety interlock system.	See Section 2.2 & 4.2
						Check tire pressure.	See Section 7.11
						Check cutter blade condition.	See Section 7.10
						Check battery posts. Clean battery posts and cables.	See Section 7.8
		X				Inspect drive belt for proper alignment and wear. Replace drive belt after 400 hours of operation or every two years, whichever occurs first.	See Section 7.9
		X				Inspect condition of fuel lines.	
		X				Check battery electrolyte levels. Clean battery posts and cables.	See Section 7.8
			X			Check all hardware for tightness.	
			X			Lubricate grease fittings.	See Section 7.3
			X			* Clean air filter element.	See Section 7.7
			X			Inspect drive belt for proper alignment and wear.	See Section 7.9
			X			Inspect condition of fuel lines.	
			X			Drain hydraulic system. Replace hydraulic oil and hydraulic oil filters.	See Section 7.4

* Perform these maintenance procedures more frequently when regularly exposed to dusty or dirty conditions.

7.2 RECOMMENDED MAINTENANCE INTERVALS CONT.

HOURS						PROCEDURE	COMMENTS
BREAK-IN (FIRST 10)	8	40	100	200	500		
				X		Check all hardware for tightness.	
				X		Lubricate grease fittings.	See Section 7.3
				X		Check hydraulic oil level.	See Section 7.4
				X		Inspect fuel lines, vapor hoses, and tank grommets after 200 hours of operation or annually.	
					X	Lubricate grease fittings.	See Section 7.3
					X	Adjust electric PTO clutch.	See Section 6.6
					X	Lubricate caster wheel pivot.	See Section 7.3
					X	Drain hydraulic system. Replace hydraulic oil and hydraulic oil filters.	See Section 7.4

* Perform these maintenance procedures more frequently when regularly exposed to dusty or dirty conditions.

7.3 LUBRICATION

GREASE FITTING LUBRICATION CHART

LOCATION	LUBRICATION INTERVAL	LUBRICANT	NO. OF
1 - Caster Wheel Pivot	500 Hours / Yearly	Chassis Grease	2
2 - Cutter Deck Bell Cranks	100 Hours / Bi-Weekly	Chassis Grease	4
3 - Cutter Deck Pusharms	100 Hours / Bi-Weekly	Chassis Grease	2

Compatible Greases: Scag Premium Chassis Grease (P# 486257)
Scag Premium Spindle Grease (P# 486258)

Procedure: Remove grease cap (P# 484195). Remove plug (P#482028-01) and install grease zerk. Apply grease to the fitting until new grease appears at the top of the caster extension. Remove the grease zerk and reinstall the plug. Reinstall the grease cap. Special tool (P# 47007) is recommended for use in the installation of the grease cap.

GREASE FITTING LOCATIONS

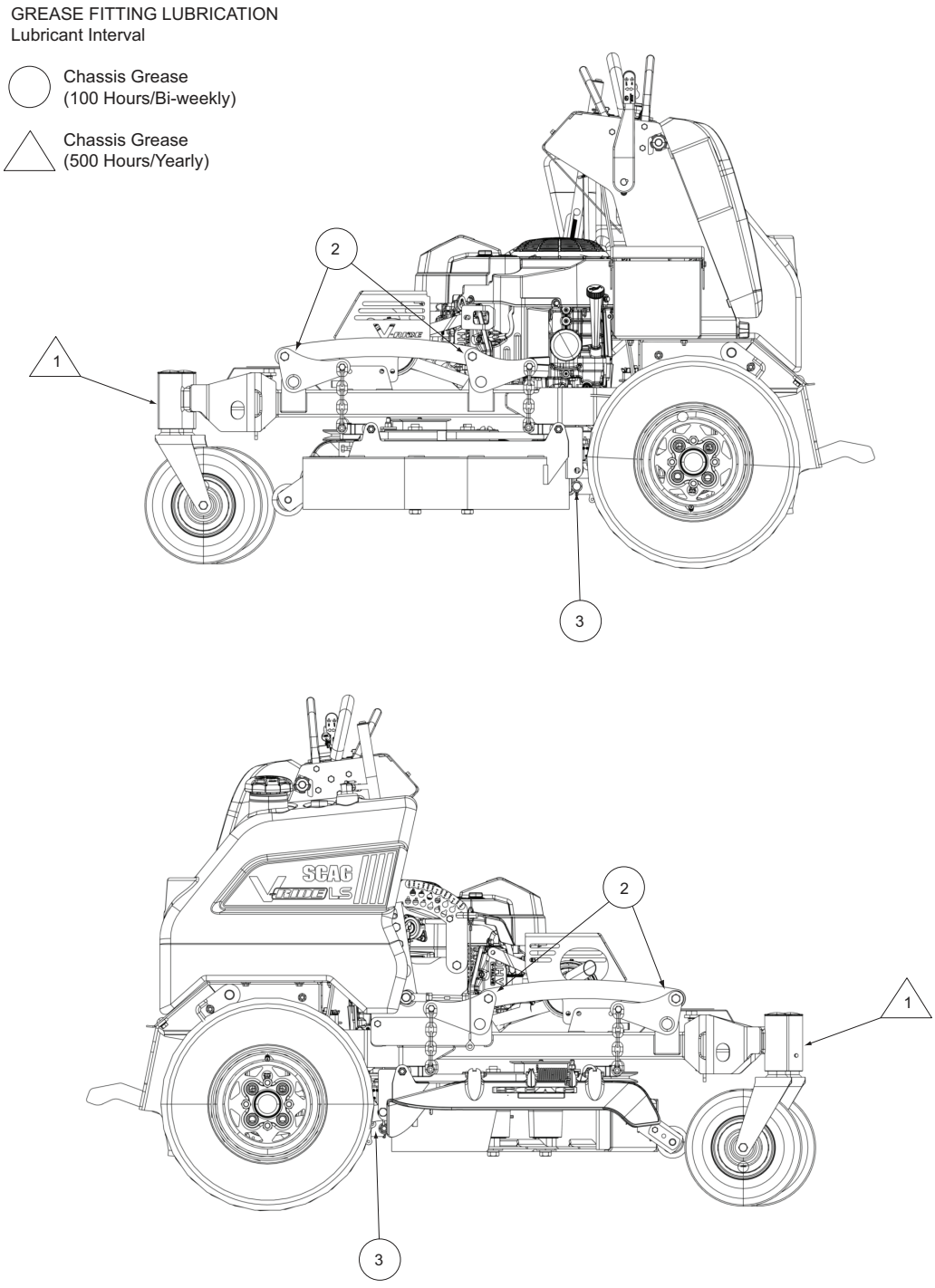

Figure 7-1. V-Ride LS Grease Fittings

7.4 HYDRAULIC SYSTEM

CHANGING HYDRAULIC OIL & FILTER

The hydraulic oil and filter should be changed after the first 100 hours of operation. Thereafter, the hydraulic oil and filter should be changed after every 400 hours of operation or annually, whichever occurs first. If the color of the oil becomes black or milky, change immediately. A black color or rancid odor indicates an overheating of the oil. A milky color indicates that water has mixed with and contaminated the oil.

1. Park the machine on a level surface, engage the parking brake, and shut off the engine.
2. Remove the three 1/4" filter guard screws and the filter guard from both transaxles. See Figure 7-2.

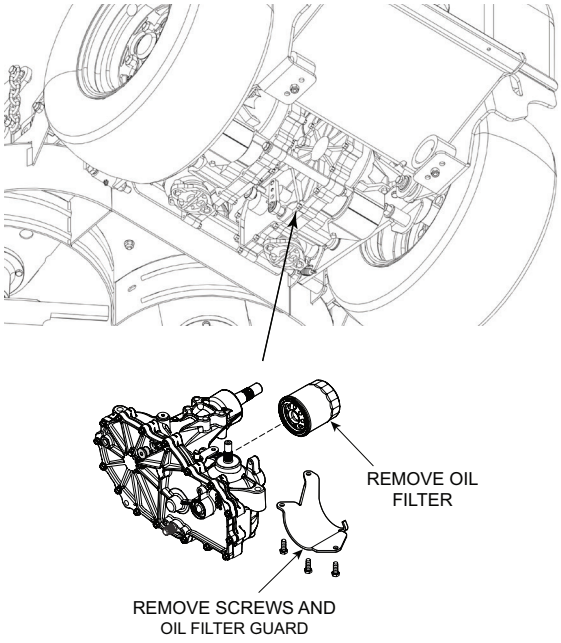

Figure 7-2. Hydraulic Oil Filter & Drain Plug

3. Clean dirt and debris from the perimeter of the hydraulic oil filters.
4. Place a suitable container under the hydraulic oil filters before draining.
5. Remove the hydraulic oil filters from both axles and allow for all of the used oil to drain into the container. See Figure 7-2.
6. Properly discard of all used oil after the hydraulic system has drained completely.
7. Install new hydraulic oil filters by hand. After the filter gasket contacts the filter base, turn the hydraulic oil filter three-quarters to one complete turn.
8. Reinstall the filter guards. Torque the filter guard screws to 65 in-lbs.
9. Remove the side top port plug from both transaxles before filling with fresh oil. See Figure 7-3.

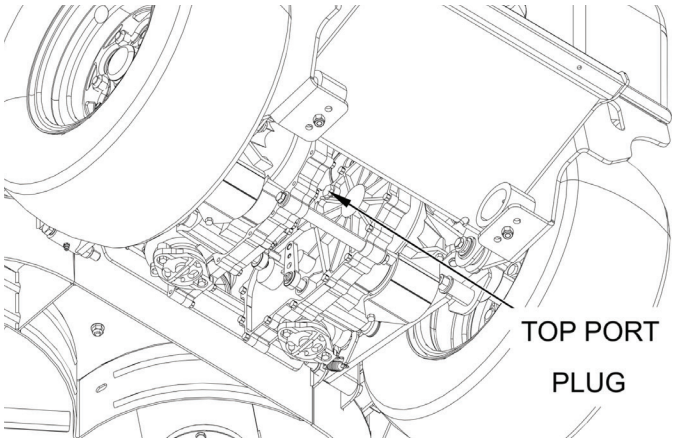

Figure 7-3. Top Port Plug Location

10. Remove the fill port plug from both transaxles. See Figure 7-4.

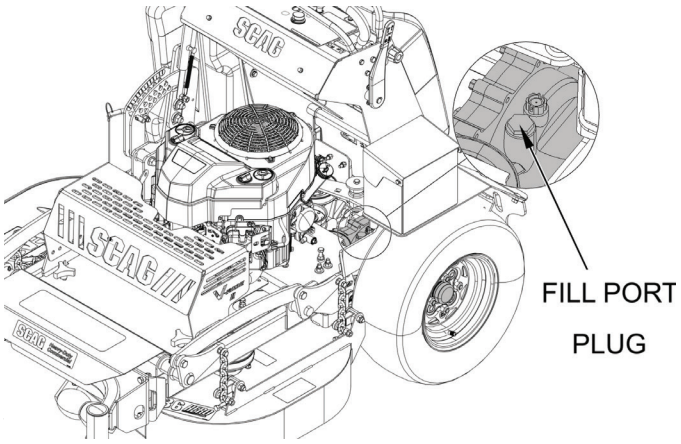

Figure 7-4. Left Side Fill Port Plug

11. Fill each transaxle with Scag Hydraulic System Oil (P# 486255, 1 Quart; P# 486254, 1 Gallon) until the oil appears at the bottom of each axle top port. Approximately 2 quarts of oil per transaxle.
12. Reinstall the top port plugs. Torque to 180 in-lbs.
13. Reinstall the fill port plugs.

14. After changing the hydraulic oil, the hydraulic system must be purged of air. Raise the rear of the machine untill the drive wheels are off the ground. Secure the machine using jack stands rated for the weight of the machine and block the front caster wheels to prevent the machine from moving.
15. Place the dump valve control levers in the FREE WHEEL position. See Figure 7-5.

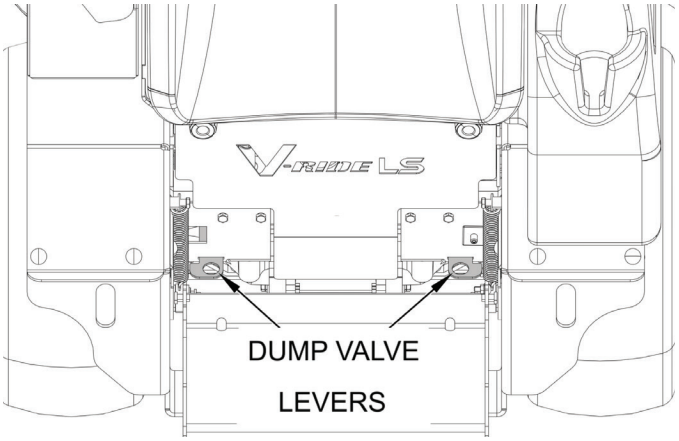

Figure 7-5. Dump Valve Control Lever

16. Stand in the operating position. Start the engine and disengage the parking brake.
17. Run the engine at half throttle and move the steering control levers from the full forward position to the full reverse position. Repeat five to six times.
18. Engage the parking brake. Place the dump valve levers in the DRIVE position. See Figure 7-5.
19. Stand in the operating position. Start the engine and disengage the parking brake.
20. Run the engine at half throttle and move the steering control levers from the full forward position to the full reverse position. Repeat five to six times.
21. Repeat steps 15 through 20 until all the air is purged from the hydraulic system.
22. After the purge procedure is complete, remove the side top port plug from both transaxles. See Figure 7-3.
23. Check the hydraulic oil level. If necessary, add oil to the transaxles until the oil appears at the bottom of each axle top port.

7.5 ENGINE OIL

CHECKING THE ENGINE OIL LEVEL

The engine oil level should be checked after every eight hours of operation or daily, as instructed by the Engine Owner's Manual provided with this machine.

CHANGING THE ENGINE OIL & FILTER

⚠ WARNING

Components will be hot if the machine has been running. Avoid burns by allowing the mower to cool before changing the engine oil and removing the engine oil filter.

The engine oil and engine oil filter should be changed after the first 20 hours of operation.

Thereafter, the engine oil should be changed after every 100 hours of operation or bi-weekly, whichever occurs first. The engine oil filter should be changed after every 200 hours of operation or monthly, whichever occurs first. Refer to the Engine Owner's Manual provided with this machine for further instructions.

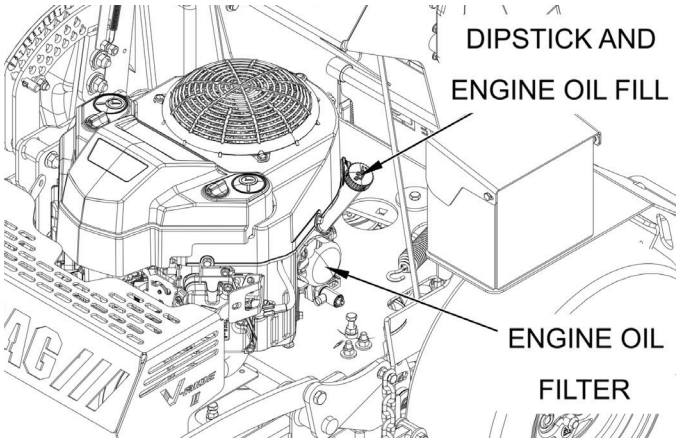

Figure 7-6. Oil Fill, Dipstick, & Oil Filter

7.6 ENGINE FUEL SYSTEM

FILLING THE FUEL TANK

Fill the fuel tank at the beginning of each operating day with clean, fresh fuel. See the Engine Owner's Manual for fuel requirements.

⚠ DANGER

Prevent burns by allowing the machine to cool before removing the fuel tank cap and refueling.

1. Extinguish all ignition sources (cigarettes, matches, lighters, etc.) before working with fuel.
2. Only use approved containers to store fuel. Never fuel indoors or inside enclosed spaces, and clean any spillage before starting the machine.

⚠ CAUTION

If fuel is spilled on clothing, change clothing immediately and wash affected skin. Affected areas may suffer from irritation, chemical burns, and contact dermatitis.

3. Do not fill containers on a truck or trailer bed with a plastic liner. Always place containers on the ground and away from your vehicle before fueling.
4. Remove the machine from the truck or trailer and fuel on the ground. If impossible, fuel the machine with a portable container instead of a fuel dispenser.
5. Do not remove the fuel tank cap or add fuel while the machine is running. Allow for the engine to fully cool before adding fuel.
6. Clean dirt and debris from the fuel tank and remove the fuel tank cap.
7. Keep the fuel nozzle in contact with the rim of the fuel tank or approved container at all times until fueling is complete. Do not use nozzle lock devices.
8. Do not fill above the bottom of the fuel tank neck to allow for the expansion of fuel. See Figure 7-7.

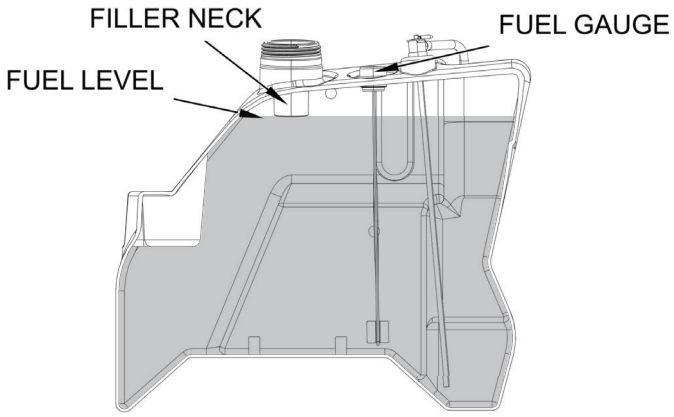

Figure 7-7. Fuel Fill Level

9. Clean the fuel tank cap and reinstall it onto the fuel tank. Tighten until secure.

REPLACING THE FUEL FILTER

The engine fuel filter should be replaced after every 500 hours of operation or annually, whichever occurs first.

1. Close the fuel shut-off valve. See Figure 7-8.

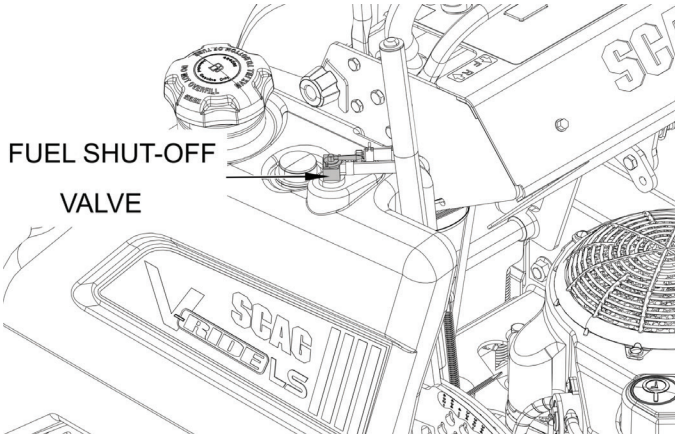

Figure 7-8. Fuel Shut-Off Valve

2. Remove the two clamps securing the fuel filter to the fuel hose line. Remove the fuel filter.
3. Install a new fuel filter. Ensure the filter is installed facing the proper direction. Secure the fuel filter to the fuel hose line using the two clamps. See Figure 7-9.

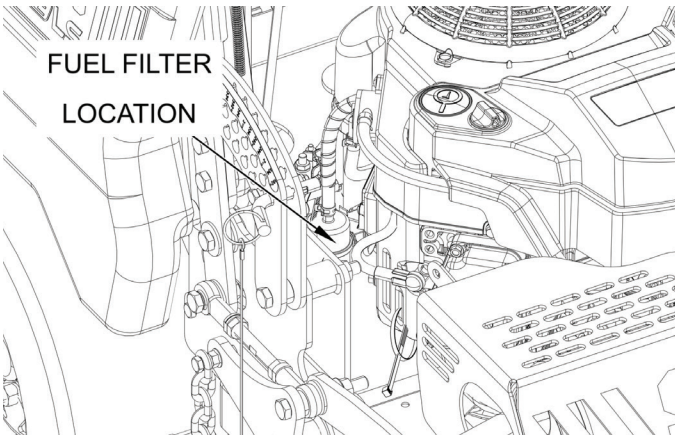

Figure 7-9. Fuel Filter Location

4. Open the fuel shut-off valve.

7.7 ENGINE AIR CLEANER

The operating environment and conditions dictate the air cleaner service periods. Inspect and clean the air cleaner after every 100 hours of operation or bi-weekly, whichever occurs first. Replace the air cleaner as needed. Refer to the Engine Owner's Manual for further instructions.

NOTE

In extremely dusty conditions, check the air cleaner once or twice daily to prevent dust buildup and engine damage.

7.8 BATTERY

⚠ WARNING

Batteries produce flammable and explosive gases. Work in a well-ventilated area when checking, testing, or charging the battery. Keep arcs, sparks, and flames away from the battery at all times. Always wear safety glasses, protective equipment, and use insulated tools while working with the battery. Never smoke while handling the battery to avoid personal injury.

⚠ WARNING

Battery posts, terminals, and related accessories contain lead and lead compounds, chemicals known to cause cancer and reproductive harm. Wash hands after handling.

⚠ WARNING

Battery electrolyte fluid contains sulfuric acid, a poison that can cause severe chemical burns. Avoid contact with eyes, skin, and clothing. Wear safety glasses, protective equipment, and use insulated tools when working with batteries.

If fluid contact occurs, follow the recommended first aid procedures below:

BATTERY ELECTROLYTE FIRST AID

External Contact — Flush with water.

Eye Contact — Flush with water for at least 15 minutes. Seek medical attention immediately!

Internal Contact — Do not induce vomiting. Drink large quantities of water followed by Milk of Magnesia, beaten eggs, or vegetable oil. Seek medical attention immediately!

REMOVING THE BATTERY

1. Park the machine on a level surface and engage the parking brake.
2. Shut off the engine, remove the key, and allow for the engine to cool.
3. Open the battery box located on the left side of the machine.
4. Remove the negative battery cable from the battery.

5. Remove the positive battery cable from the battery.
6. Uninstall the battery box strap and remove the battery from the machine. See Figure 7-10.

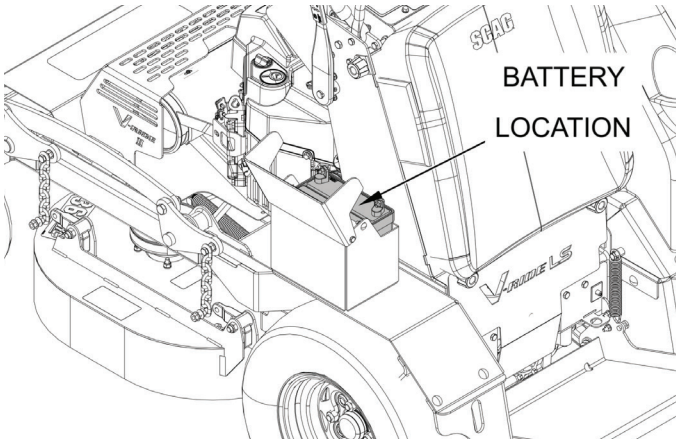

Figure 7-10. Battery Location

CHARGING THE BATTERY

Read the Battery Charger Owner's Manual for operation instructions before attempting to charge the battery.

Under normal conditions, the engine alternator will maintain a charge on the battery. However, the charging system may not be able to recharge a battery that has been discharged for a long period of time. In this case, a battery charger will be required to charge the battery.

IMPORTANT

Before charging the battery, the battery should be removed from the machine as outlined in Procedure A: "Removing the Battery."

Clean dirt and debris from the battery cell covers and ensure that the electrolyte covers all lead plates in the battery cells before proceeding.

⚠ WARNING

Batteries produce explosive gases. Charge the battery in a well-ventilated space to allow for the dissipation of gases during the charging process.

⚠ WARNING

Never charge a frozen battery. Attempting to charge a frozen battery may cause an explosion and result in personal injury. Always wait for a battery to warm up before attaching a charger.

Charging rates between three (3) and fifty (50) amperes are satisfactory if the battery does not feel excessively hot (over 125° Fahrenheit), or if excessive gassing or spewing of electrolyte does not occur. If the temperature exceeds 125° Fahrenheight, or if gassing and spewing occurs, the charging rate must be reduced or temporarily stopped to permit cooling.

When the battery is fully charged, disconnect the battery charger from its power source before disconnecting the charger leads from the battery posts.

JUMP-STARTING THE BATTERY

1. The booster battery must be a 12-Volt type. If using a vehicle to jump-start the machine, the vehicle must have a negative ground system.
2. Connect the positive jumper cable to the positive battery post.
3. Connect the negative jumper cable to the negative battery post.
4. Turn on the booster battery and attempt to start the machine. If using a vehicle to jump-start the machine, start the vehicle and wait five minutes to allow for the battery to charge. Attempt to start the machine. When successful, do not shut off the machine.
5. Remove the negative jumper cable from the battery.
6. Remove the positive jumper cable from the battery.

7.9 DRIVE BELTS

All drive belts are spring-loaded and self-tensioning. During the initial run-in of the machine, check the drive belt for proper alignment and wear after the first 2, 4, 8, and 10 hours of operation. Thereafter, check the drive belt after every 40 hours of operation or weekly, whichever occurs first.

NOTE

If you experience frequent belt wear or breakage, see your Authorized Scag Dealer service center for a belt adjustment.

⚠ DANGER

Steering control will be lost if the pump drive belt fails, which may result in serious injury or death. Replace the pump drive belt as needed, after 400 hours of operation or every two years, whichever occurs first.

7.10 CUTTER BLADES

BLADE INSPECTION

1. Engage the parking brake, shut off the engine, and remove the key before servicing the cutter blades.
2. Raise the cutter deck to the highest position.
3. Insert the lanyard pin into the cutting height index at the highest cutting height position to prevent the cutter deck from falling.

⚠ WARNING

Always wear proper hand and eye protection when working with cutter blades.

4. Check the cutter blades for straightness. If the cutter blades are bent, they must be replaced.
5. Check the cutter blades for wear. If any part of the cutter blade is worn to 1/2 its original thickness, the cutter blade must be replaced.

⚠ WARNING

Do not attempt to straighten a bent blade. Never weld a broken or cracked blade. Always replace damaged cutter blades to ensure safe operating conditions.

6. If a cutting edge is dull or nicked, the cutter blade must be sharpened. Remove any damaged cutter blades before sharpening.

NOTE

Maintain sharp cutter blades for the best mower performance. Cutting with dull blades not only yields a poor mowing job, but slows the cutting speed of the mower. This causes extra wear on the engine and blade drive.

BLADE SHARPENING

IMPORTANT

Use a file to sharpen cutter blades. Using a wheel grinder may burn the blade.

Do not sharpen blades beyond 1/3 of the original width of the blade. See Figure 7-11.

1. Sharpen the cutting edge at the same bevel as the original edge. Sharpen only the top of the cutting edge to maintain sharpness. See Figure 7-11.

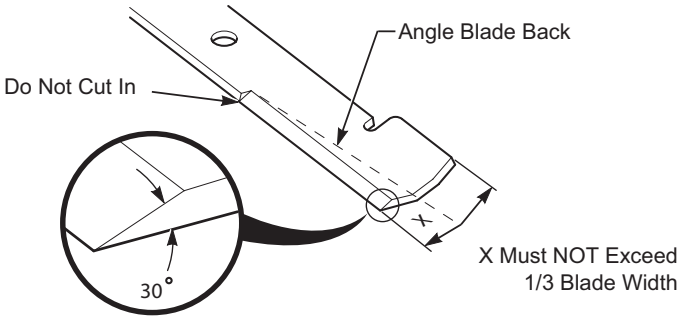

Figure 7-11. Cutter Blade Sharpening

2. Check the balance of the cutter blade. Cutter blades must be balanced to 1-1/2 oz-in. If the blade is not balanced, vibration and premature wear can occur.

NOTE

For cutter blade balancing, visit your Authorized Scag Dealer. Your Authorized Scag Dealer also stocks special tools if you choose to balance your own cutter blades.

BLADE REPLACEMENT

⚠ WARNING

Always wear proper hand and eye protection when working with cutter blades.

1. Engage the parking brake, shut off the engine, and remove the key before servicing the cutter blades.
2. Raise the cutter deck to the highest position.
3. Insert the lanyard pin into the cutting height index at the highest cutting height position to prevent the cutter deck from falling.
4. Secure the cutter blades to prevent rotation. Use the optional Blade Buddy tool (P# 9212) to help secure the cutter blades from rotating.
5. Remove the cutter blade attaching bolt. Remove the cutter blade, bolt, lock washer, and flat washer from the spindle shaft. See Figure 7-12.

⚠ CAUTION

Inspect the cutter blade spacer(s) and washer for wear and cupping. Replace the worn parts before operating the machine.

Worn spacers and washers will not allow for the proper tightening of the cutter blades, which may lead to cutter blade failure, personal injury, or propery damage.

6. To install the new cutter blade, place the lock washer and flat washer onto the blade bolt and insert the bolt into the hole in the cutter blade.
7. Install the cutter blade onto the cutter spindle shaft.

NOTE

Ensure that the cutter blade is installed with the lift wing facing towards the top.

8. Secure the cutter blades from rotating and torque to 75 ft-lbs. See Figure 7-12.

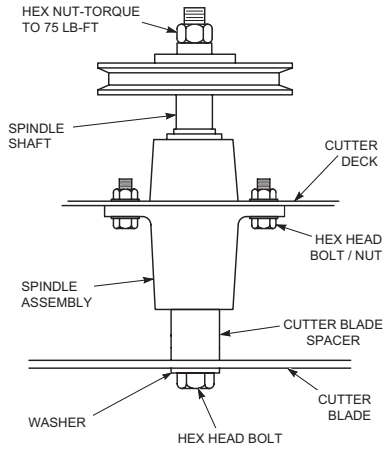

Figure 7-12. Cutter Blade Replacement

7.11 TIRES

Check tire pressures at the beginning of each operating day. Thereafter, check tire pressures after every eight hours of operation or daily, whichever occurs first.

- Caster Wheels: Semi-Pneumatic
- Drive Wheels: 8 PSI

7.12 BODY, DECK, AND UPHOLSTERY

1. Wash the machine after each use. Use cold water and automotive cleaners.

⚠ CAUTION

Do not wash the machine while running or hot. Cold water will damage the engine. Clear any dirt or debris buildup on the engine with a brush, blower, or compressed air.

2. Use a mild soap solution, a vinyl cleaner, or a rubber cleaner to clean the cushions.
3. Do not spray electrical components with water or cleaners.
4. Repair damaged metal surfaces using Scag touch-up paint, available from your Authorized Scag Dealer. For maximum paint protection, wax the machine.

NOTES

PAGE LEFT INTENTIONALLY BLANK

ILLUSTRATED PARTS LIST

8.1 SCAG APPROVED ATTACHMENTS AND ACCESSORIES

Attachments and accessories manufactured by companies other than Scag Power Equipment or Metalcraft of Mayville must be approved for use on this machine by Scag Power Equipment. Any alterations or modifications made to the machine that change the performance, durability, or allow the use of unapproved attachments and accessories will not be covered by warranty.

Accessories	P/N
Grass Collection Systems	
GC-F4 (Fabric Grass Catcher)	926Z
Mulching Accessories	
Mulch Plate (36H / 42H)	927Z
Mulch Plate (48H)	928B
Mulch Plate (52H)	928C
Hurricane Mulch System (36H)	927N
Hurricane Mulch System (42H)	929C
Hurricane Mulch System (48H)	927S
Hurricane Mulch System (52H)	927F

Accessories	P/N
Miscellaneous	
Blade Buddy	9212
Anti-Blowout Kit (36H)	928F
Height of Cut Kit	463992
Scag Premium Lubricants	
Chassis Grease	486257
Hydraulic System Oil (1 QT)	486255
Hydraulic System Oil (1 Gallon)	486254
Scag Touch-Up Paints	
Cat's Eye Gold (Bottle w/ Brush)	484540-01
Cat's Eye Gold (Aerosol Spray Can)	48521
Textured Black (Aerosol Spray Can)	486269

IPL LEGEND

Abbrev.	Description
HH	Hex Head
SH	Socket Head
HWH	Hex Washer Head
HSH	Hex Socket Head
FLG	Flange
SERR	Serrated
ES	Elastic Stop
HD	Hardened
TT	Taptite
GR	Grade
NPT	Tapered Thread

36H CUTTER DECK

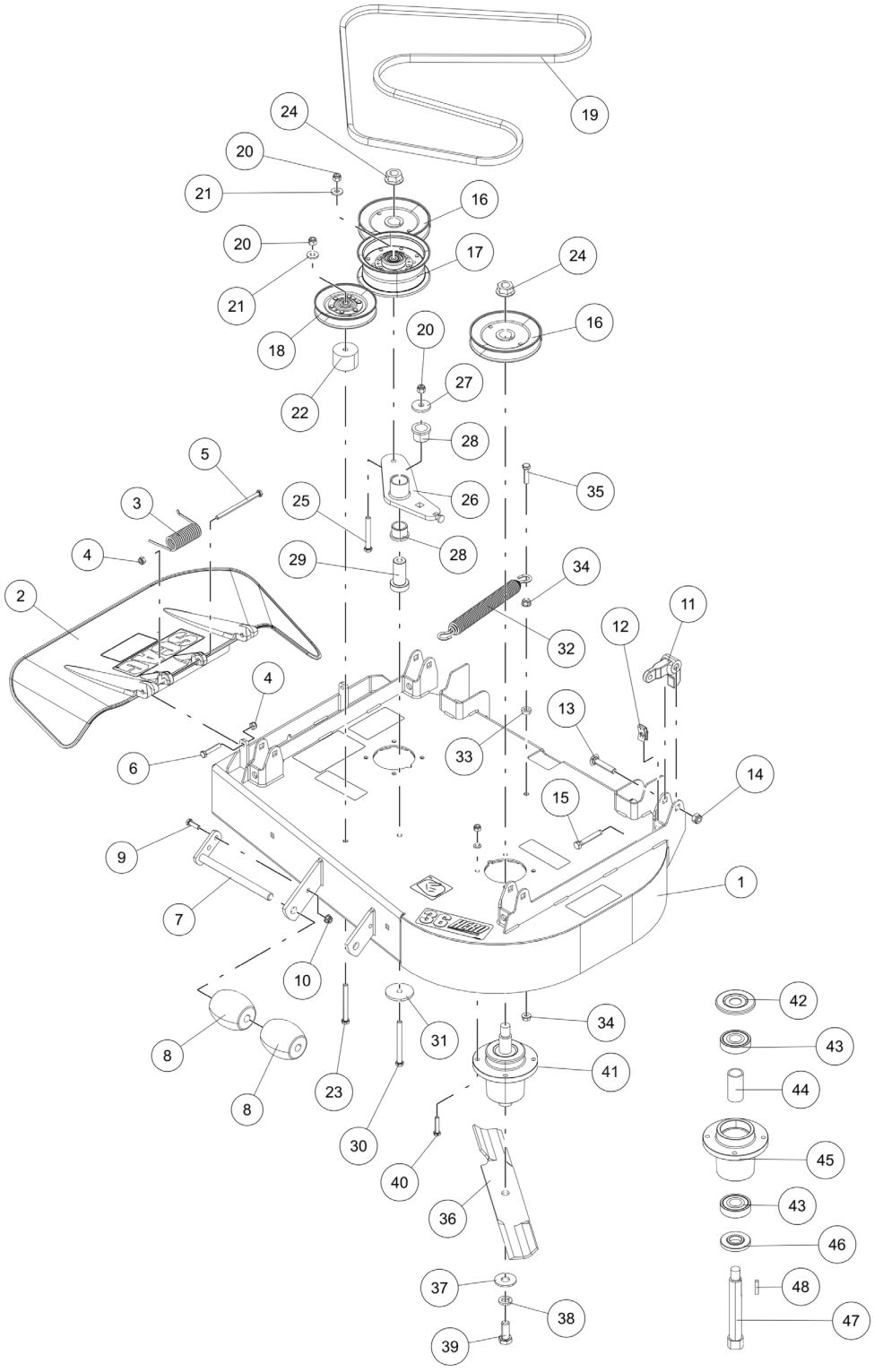

36H CUTTER DECK

Ref. No.	Part No.	Description
1	463923	Cutter Deck w/ Decals (36H)
2	462031	Discharge Chute Assy.
3	482245	Spring, Discharge Chute
4	04021-10	Locknut, 5/16-18 ES
5	04001-154	Cap Screw, 5/16-18 x 4.75 HH
6	04001-12	Cap Screw, 5/16-18 x 1.75 HH
7	451926	Shaft Weldment, Guide Roller
8	482295	Wheel, Anti-Scalp
9	04001-09	Cap Screw, 5/16-18 x 1.00 HH
10	04117-01	Locknut, 5/16-18 FLG HH ES
11	485528	Lever, Deck Level
12	04110-03	U-Nut, 3/8-16
13	04003-42	Carriage Bolt, 7/16-14 x 2.25
14	04021-11	Locknut, 7/16-14 ES
15	04107-05	Cap Screw, 3/8-16 x 2.50 HH
16	483324	Pulley, 5.73"
17	483210	Pulley, Idler (5.00")
18	48181	Pulley, Idler
19	486023	Belt, Cutter Deck
20	04021-09	Locknut, 3/8-16 ES
21	04043-04	Flat Washer, 3/8-.391 x .938 x .105 HD
22	431438	Spacer, Pulley
23	04001-77	Cap Screw, 3/8-16 x 3.50 HH
24	04112-06	Locknut, 3/4-16 Spiral Lock
25	04001-54	Cap Screw, 3/8-16 x 3.00 HH
26	463851	Idler Arm Assy. (Incl. 28)
27	04043-11	Flat Washer, 3/8-.438 x 1.50 x .1793 HD
28	483453-03	Bearing, Plastic
29	43708	Pivot, Idler
30	04001-30	Cap Screw, 3/8-16 x 4.00 HH
31	04041-38	Flat Washer, 3/8-.406 x 2.25 x .1875
32	484020	Spring, Cutter Deck
33	43063	Spacer, Clutch Control
34	04019-04	Nut, 3/8-16 SERR FLG
35	04001-136	Cap Screw, 3/8-16 x 1.50 HH GR 8

Ref. No.	Part No.	Description
36	482878	Cutter Blade, 18"
37	04043-06	Flat Washer, 5/8-.688 x 1.75 x .134 HD
38	04030-07	Lock Washer, 5/8 ANSI Helical Spring
39	04001-121	Cap Screw, 5/8-11 x 1.50 HH
40	04001-175	Cap Screw, 5/16-18 x 1.50 HH GR 8
41	461950	Spindle Assy. (Incl. 42, 43, 44, 45, 46, 47, 48)
42	483304	Debris Shield
43	483303	Bearing, Ball
44	43693	Spacer, Bearing
45	462017	Spindle Housing (Incl. 43, 44)
46	43694	Protector, Bearing
47	43695	Shaft, Spindle
48	04063-01	Key, 1/4 x 1/4 x 1.25

42H CUTTER DECK

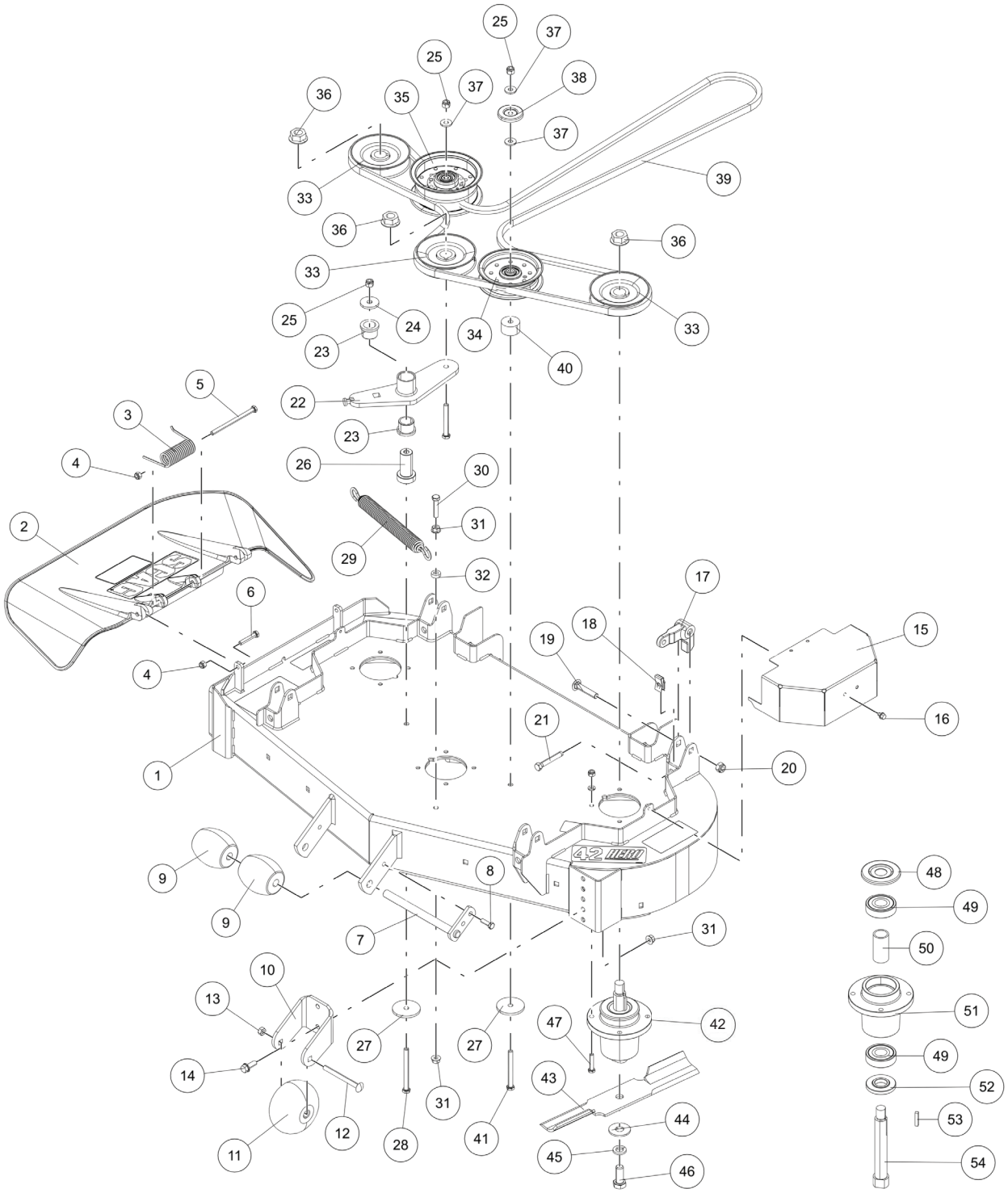

42H CUTTER DECK

Ref. No.	Part No.	Description
1	463924	Cutter Deck w/ Decals (42H)
2	462031	Discharge Chute Assy.
3	482245	Spring, Discharge Chute
4	04021-10	Locknut, 5/16-18 ES
5	04001-154	Cap Screw, 5/16-18 x 4.75 HH
6	04001-12	Cap Screw, 5/16-18 x 1.75 HH
7	451926	Shaft Weldment, Guide Roller
8	04001-09	Cap Screw, 5/16-18 x 1.00
9	482295	Wheel, Anti-Scalp
10	427865	Bracket, Anti-Scalp Wheel
11	481632	Wheel, Anti-Scalp
12	04003-26	Carriage Bolt, 3/8-16 x 4.00 RHSN
13	04021-05	Locknut, 3/8-16 Center Lock
14	04017-27	Cap Screw, 3/8-16 x 1.00 SERR FLG HH
15	4201938	Belt Cover
16	04011-29	Screw, 1/4-20 x .375 HWH Shockproof
17	485528	Lever, Deck Level
18	04110-03	U-Nut, 3/8-16
19	04003-42	Carriage Bolt, 7/16-14 x 2.25
20	04021-11	Locknut, 7/16-14 ES
21	04107-05	Cap Screw, 3/8-16 x 2.50 HH Special Lock
22	463883	Idler Arm w/ Bushings (Incl. 23)
23	483453-03	Bearing, Plastic
24	04043-11	Flat Washer, 3/8-.438 x 1.50 x .1793 HD
25	04021-09	Locknut, 3/8-16 ES
26	43708	Pivot, Idler
27	04041-38	Flat Washer, 3/8-.406 x 2.25 x .1875
28	04001-30	Cap Screw, 3/8-16 x 4.00 HH
29	484020	Spring, Cutter Deck
30	04001-135	Cap Screw, 3/8-16 x 1.75 HH
31	04019-04	Nut, 3/8-16 SERR FLG
32	43063	Spacer, Clutch Control
33	486910	Pulley, 4.62"
34	483213	Pulley, Idler (4.50")
35	483210	Pulley, Idler (5.00")

Ref. No.	Part No.	Description
36	04112-06	Locknut, 3/4-16 Spiral Lock
37	04043-04	Flat Washer, 3/8-.391 x .938 x .105 HD
38	424367	Dust Shield
39	489123	Belt, Cutter Deck
40	43711	Spacer
41	04001-77	Cap Screw, 3/8-16 x 3.50 HH
42	461950	Spindle Assy. (Incl. 48, 49, 50, 51, 52, 53, 54)
43	483014	Cutter Blade, 14.75"
44	04043-06	Flat Washer, 5/8-.688 x 1.75 x .134 HD
45	04030-07	Lock Washer, 5/8 ANSI Helical Spring
46	04001-121	Cap Screw, 5/8-11 x 1.50 HH
47	04001-175	Cap Screw, 5/16-18 x 1.50 HH GR 8
48	483304	Debris Shield
49	483303	Bearing, Ball
50	43693	Spacer, Bearing
51	462017	Spindle Housing (Incl. 49, 50)
52	43694	Protector, Bearing
53	04063-01	Key, 1/4 x 1/4 x 1.25
54	43695	Shaft, Spindle

48H CUTTER DECK

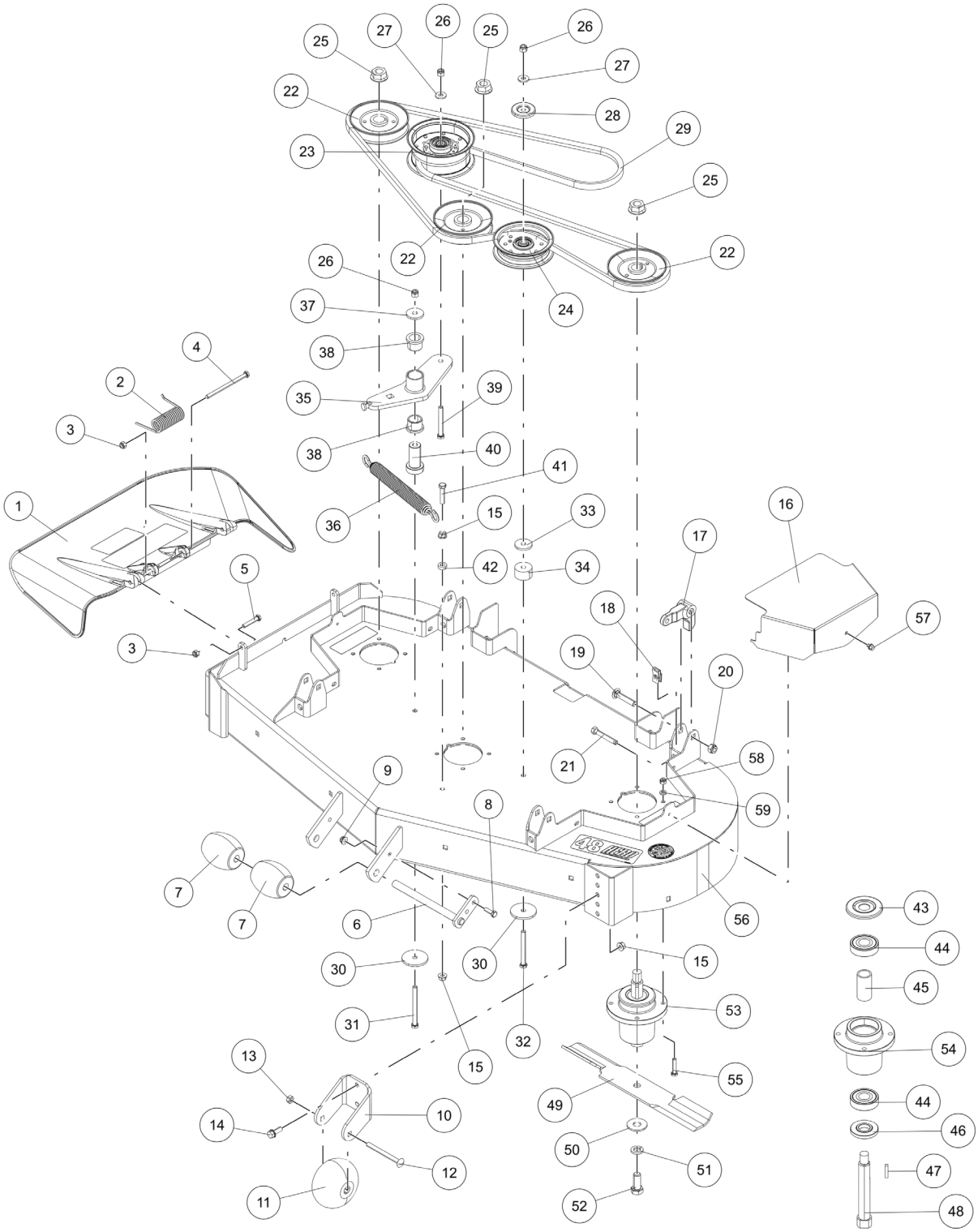

48H CUTTER DECK

Ref. No.	Part No.	Description
1	462031	Discharge Chute Assy.
2	482245	Spring, Discharge Chute
3	04021-10	Locknut, 5/16-18 ES
4	04001-154	Cap Screw, 5/16-18 x 4.75 HH
5	04001-12	Cap Screw, 5/16-18 x 1.75 HH
6	451926	Shaft Weldment, Guide Roller
7	482295	Wheel, Anti-Scalp
8	04001-09	Cap Screw, 5/16-18 x 1.00 HH
9	04117-01	Locknut, 5/16-18 FLG HH ES
10	427865	Bracket, Anti-Scalp Wheel
11	481632	Wheel, Anti-Scalp
12	04003-26	Carriage Bolt, 3/8-16 x 4.00 RHSN
13	04021-05	Locknut, 3/8-16 Center Lock
14	04017-27	Cap Screw, 3/8-16 x 1.00 SERR FLG HH
15	04019-04	Nut, 3/8-16 SERR FLG
16	4201930	Belt Cover
17	485528	Lever, Deck Level
18	04110-03	U-Nut, 3/8-16
19	04003-42	Carriage Bolt, 7/16-14 x 2.25
20	04021-11	Locknut, 7/16-14 ES
21	04107-05	Cap Screw, 3/8-16 x 2.50 HH Special Lock
22	483323	Pulley, 5.13"
23	483210	Pulley, Idler (5.00")
24	483213	Pulley, Idler (4.50")
25	04112-06	Locknut, 3/4-16 Spiral Lock
26	04021-09	Locknut, 3/8-16 ES
27	04043-04	Flat Washer, 3/8-.391 x .938 x .105 HD
28	424367	Dust Shield
29	483966	Belt, Cutter Deck
30	04041-38	Flat Washer, 3/8-.406 x 2.25 x .1875
31	04001-30	Cap Screw, 3/8-16 x 4.00 HH
32	04001-77	Cap Screw, 3/8-16 x 3.50 HH
33	04041-11	Flat Washer, 3/8-.406 x 1.50 x .1793
34	43711	Spacer
35	463883	Idler Arm w/ Bushings (Incl. 38)

Ref. No.	Part No.	Description
36	484020	Spring, Cutter Deck
37	04043-11	Flat Washer, 3/8-.438 x 1.50 x .1793 HD
38	483453-03	Bearing, Plastic
39	04001-54	Cap Screw, 3/8-16 x 3.00 HH
40	43708	Pivot, Idler
41	04001-135	Cap Screw, 3/8-16 x 1.75 HH
42	43063	Spacer, Clutch Control
43	483304	Debris Shield
44	483303	Bearing, Ball
45	43693	Spacer, Bearing
46	43694	Protector, Bearing
47	04063-01	Key, 1/4 x 1/4 x 1.25
48	43695	Shaft, Spindle
49	482877	Cutter Blade, 16.5"
50	04043-06	Flat Washer, 5/8-.688 x 1.75 x .134 HD
51	04030-07	Lock Washer, 5/8 ANSI Helical Spring
52	04001-121	Cap Screw, 5/8-11 x 1.50 HH
53	461950	Spindle Assy. (Incl. 44, 45, 46, 47, 48, 49, 55)
54	462014	Spindle Housing (Incl. 44, 45)
55	04001-175	Cap Screw, 5/16-18 x 1.50 HH GR 8
56	463925	Cutter Deck w/ Decals (48H)
57	04011-29	Screw, 1/4-20 x .375 HWH Shockproof
58	04021-22	Locknut, 5/16-18 ES GR 8
59	04030-03	Lock Washer, 5/16 ANSI Helical Spring

52H CUTTER DECK

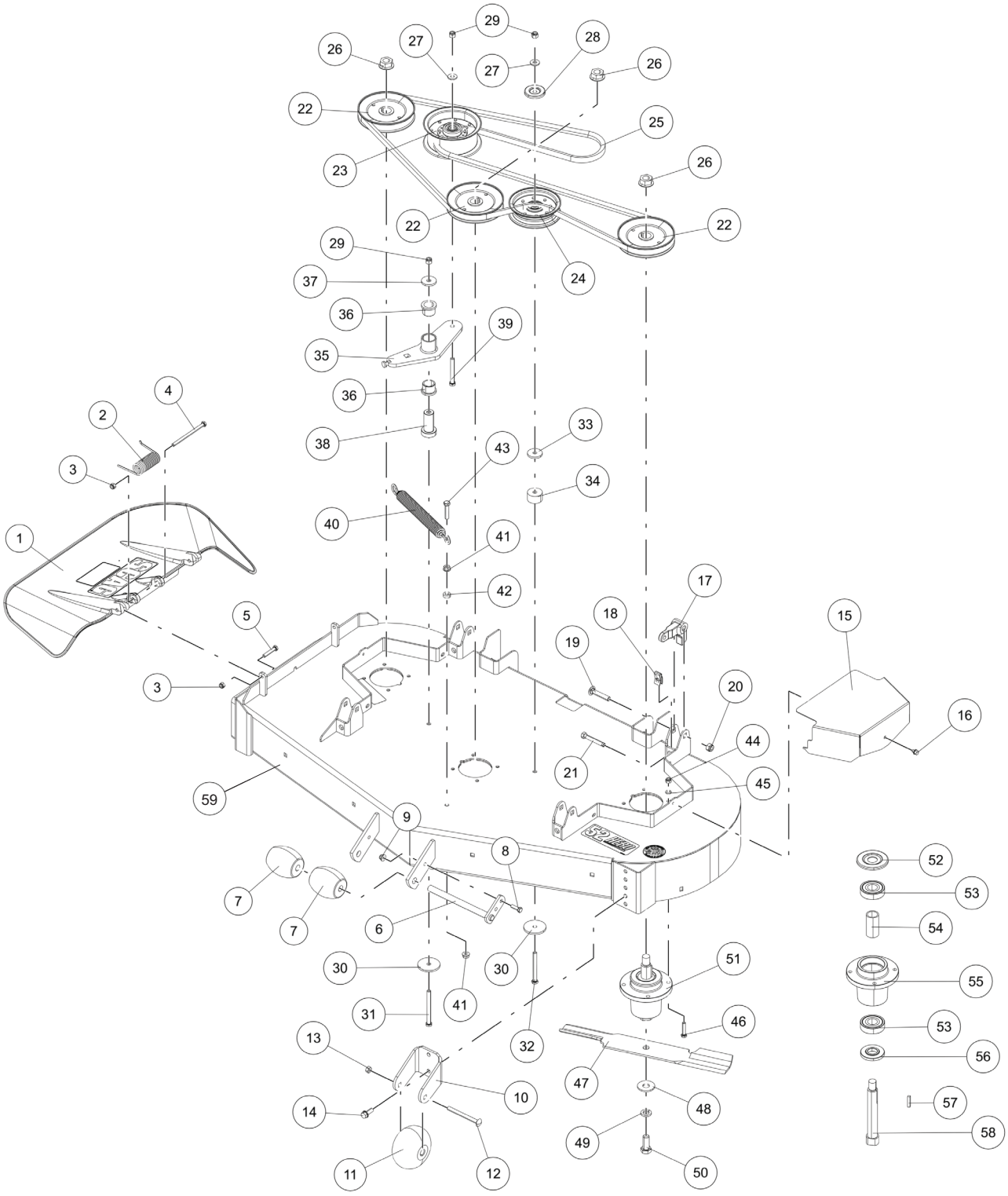

52H CUTTER DECK

Ref. No.	Part No.	Description
1	462032	Discharge Chute Assy.
2	482245	Spring, Discharge Chute
3	04021-10	Locknut, 5/16-18 ES
4	04001-154	Cap Screw, 5/16-18 x 4.75 HH
5	04001-12	Cap Screw, 5/16-18 x 1.75 HH
6	451926	Shaft Weldment, Guide Roller
7	482295	Wheel, Anti-Scalp
8	04001-09	Cap Screw, 5/16-18 x 1.00 HH
9	04117-01	Locknut, 5/16-18 FLG HH ES
10	427865	Bracket, Anti-Scalp Wheel
11	481632	Wheel, Anti-Scalp
12	04003-26	Carriage Bolt, 3/8-16 x 4.00 RHSN
13	04021-05	Locknut, 3/8-16 Center Lock
14	04017-27	Cap Screw, 3/8-16 x 1.00 SERR FLG HH
15	4201930	Belt Cover
16	04011-29	Screw, 1/4-20 x .375 HWH Shockproof
17	485528	Lever, Deck Level
18	04110-03	U-Nut, 3/8-16
19	04003-42	Carriage Bolt, 7/16-14 x 2.25
20	04021-11	Locknut, 7/16-14 ES
21	04107-05	Cap Screw, 3/8-16 x 2.50 HH Special Lock
22	483324	Pulley, 5.73"
23	483210	Pulley, Idler (5.00")
24	483213	Pulley, Idler (4.50")
25	484100	Belt, Cutter Deck
26	04112-06	Locknut, 3/4-16 Spiral Lock
27	04043-04	Flat Washer, 3/8-.391 x .938 x .105 HD
28	424367	Dust Shield
29	04021-09	Locknut, 3/8-16 ES
30	04041-38	Flat Washer, 3/8-.406 x 2.25 x .1875
31	04001-30	Cap Screw, 3/8-16 x 4.00 HH
32	04001-77	Cap Screw, 3/8-16 x 3.50 HH
33	04041-11	Flat Washer, 3/8-.406 x 1.50 x .1793
34	43711	Spacer
35	463883	Idler Arm w/ Bushings (Incl. 36)

Ref. No.	Part No.	Description
36	483453-03	Bearing, Plastic
37	04043-11	Flat Washer, 3/8-.438 x 1.50 x .1793 HD
38	43708	Pivot, Idler
39	04001-54	Cap Screw, 3/8-16 x 3.00 HH
40	484020	Spring, Cutter Deck
41	04019-04	Nut, 3/8-16 SERR FLG
42	43063	Spacer, Clutch Control
43	04001-135	Cap Screw, 3/8-16 x 1.75 HH
44	04021-22	Locknut, 5/16-18 ES GR 8
45	04030-03	Lock Washer, 5/16 ANSI Helical Spring
46	04001-175	Cap Screw, 5/16-18 x 1.50 HH GR 8
47	482878	Cutter Blade, 18"
48	04043-06	Flat Washer, 5/8-.688 x 1.75 x .134 HD
49	04030-07	Lock Washer, 5/8 ANSI Helical Spring
50	04001-121	Cap Screw, 5/8-11 x 1.50 HH
51	461950	Spindle Assy. (Incl. 52, 53, 54, 55, 56, 57, 58)
52	483304	Debris Shield
53	483303	Bearing, Ball
54	43693	Spacer, Bearing
55	462014	Spindle Housing (Incl. 53, 54)
56	43694	Protector, Bearing
57	04063-01	Key, 1/4 x 1/4 x 1.25
58	43695	Shaft, Spindle
59	463926	Cutter Deck w/ Decals (52H)

CUTTER DECK CONTROLS

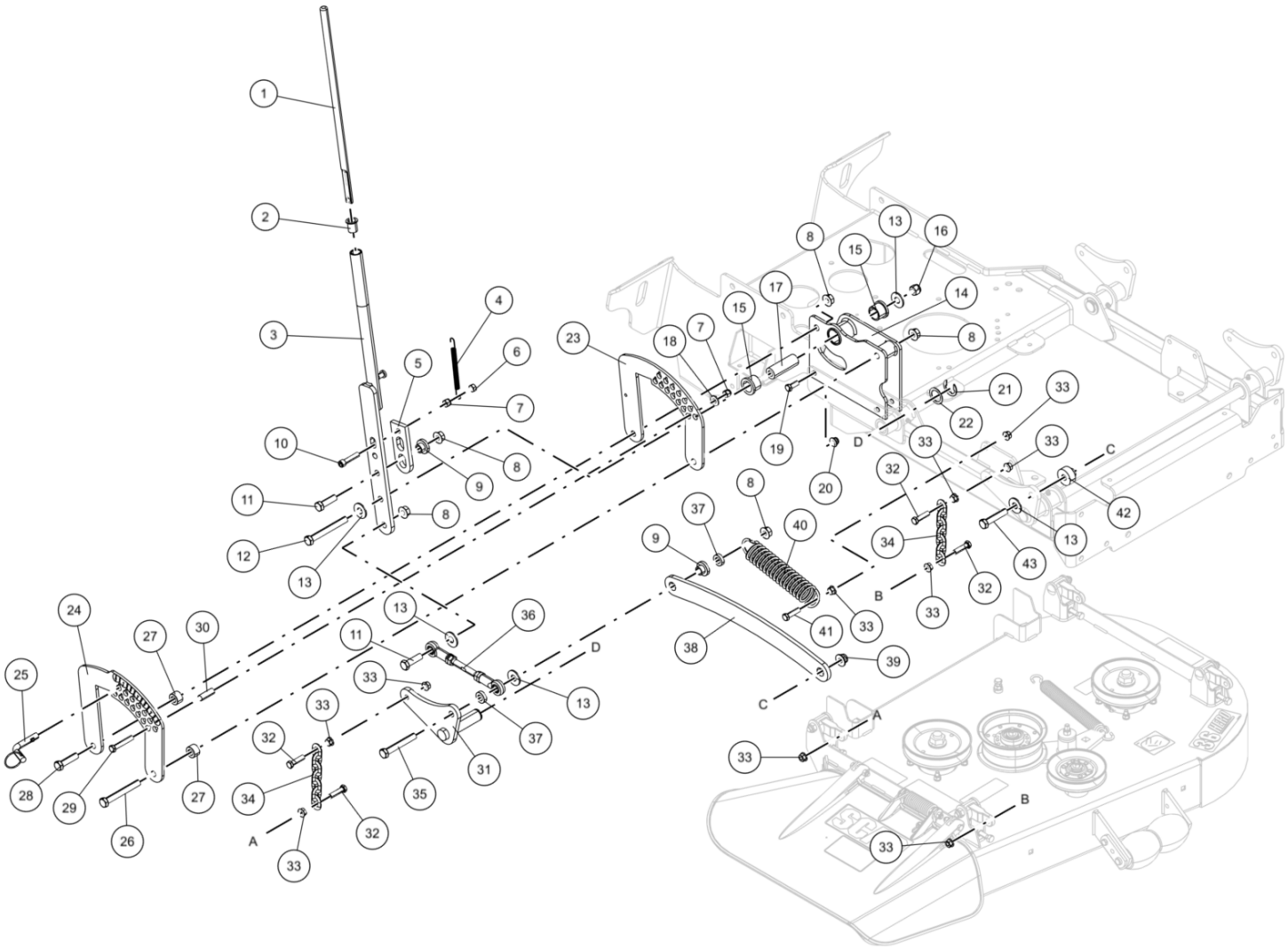

CUTTER DECK CONTROLS

Ref. No.	Part No.	Description
1	43747	Actuator Rod, Deck Latch
2	483453-14	Bearing, Plastic
3	452811	Handle Weldment, Deck Latch
4	483600	Spring, Deck Latch
5	424652	Deck Latch, Outer
6	04021-05	Locknut, 3/8-16 Center Lock
7	04021-09	Locknut, 3/8-16 ES
8	04019-06	Nut, 1/2-13 SERR FLG
9	431087	Bushing, Deck Lift
10	04015-41	Cap Screw, 3/8-16 UNC x 1.75 SH
11	04001-183	Cap Screw, 1/2-13 x 1.75 HH
12	04001-194	Cap Screw, 1/2-13 x 4.25 HH
13	04043-08	Flat Washer, 1/2-.562 x .1375 x .109 HD
14	462951	Inner Support, Deck Lift
15	483453-03	Bearing, Plastic
16	04021-07	Locknut, 1/2-13 ES
17	43872	Sleeve, Brake Pivot
18	04041-07	Flat Washer, 3/8-.391 x .938 x .105
19	04001-19	Cap Screw, 3/8-16 x 1.00 HH
20	04117-02	Locknut, 3/8-16 FLG HH ES
21	04050-08	Retainer Ring
22	04041-14	Flat Washer, 1-1.062 x 1.50 x .0478
23	427219	Inner Bracket, Deck Height
24	427288	Outer Bracket, Deck Height
25	485857	Pin, Deck Height
26	04001-87	Cap Screw, 1/2-13 x 4.00 HH
27	43806	Spacer, Deck Linkage
28	04001-72	Cap Screw, 1/2-13 x 2.00 HH
29	04001-46	Cap Screw, 3/8-16 x 2.25 HH
30	43668	Pivot, Deck Latch
31	452809	Lift Arm, Deck
32	04001-136	Cap Screw, 3/8-16 x 1.50 HH GR 8
33	04019-04	Nut, 3/8-16 SERR FLG
34	462940	Deck Chain Assembly (Incl. 32, 33)
	485864	Deck Chain
35	04001-145	Cap Screw, 1/2-13 x 3.50 HH

Ref. No.	Part No.	Description
36	486821	Linkage Assy., Deck Lift
	486819	Link, Deck Lift
	481765	Rod End (RH)
	481766	Rod End (LH)
	04020-27	Jam Nut, 1/2-20 UNF (RH)
	04020-28	Jam Nut, 1/2-20 UNF (LH)
37	43508	Spacer
38	428490	Link, Deck Lift
39	04117-04	Locknut, 1/2-13 FLG HH ES
40	483374	Spring, Deck Lift
41	04001-136	Cap Screw, 3/8-16 x 1.50 HH GR 8
42	431088	Bushing, Deck Lift
43	04001-52	Cap Screw, 1/2-13 x 2.50 HH

SHEET METAL COMPONENTS

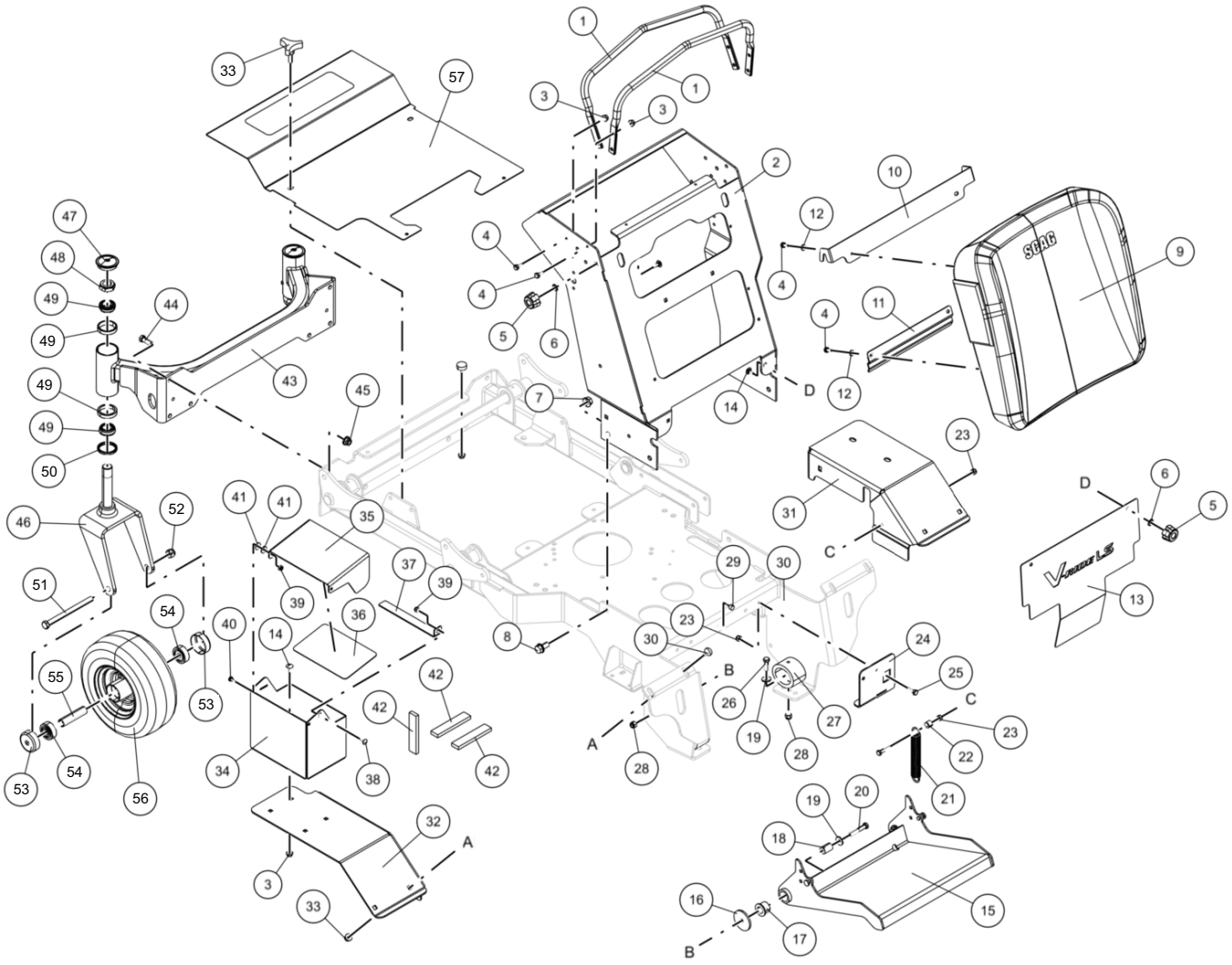

SHEET METAL COMPONENTS

Ref. No.	Part No.	Description
1	427189	Reference Bar
2	452872	Handlebar Weldment
3	04019-03	Nut, 5/16-18 SERR FLG
4	04001-08	Cap Screw, 5/16-18 x .75 HH
5	481885-06	Fluted Knob, 5/16-18
6	04024-03	Nut, Push-On
7	04112-05	Locknut, 1/2-13 Spiral
8	04017-36	Cap Screw, 1/2-13 x 1.00 SERR FLG HH
9	463330	Operator Pad Assy. (Incl. 4, 10, 11, 12)
10	427289	Bracket, Operator Pad
11	427292	Bracket, Operator Pad
12	04030-03	Lock Washer, 5/16 ANSI Helical Spring
13	4201858	Guard, Foot
14	04003-12	Carriage Bolt, 5/16-18 x .75
15	453866	Footplate Weldment
16	04041-38	Flat Washer, 3/8-.406 x 2.25 x .1875
17	486834	Bearing, Pivot
18	43572	Spacer, Footplate
19	04041-07	Flat Washer, 3/8-.391 x .938 x .105
20	04001-46	Cap Screw, 3/8-16 x 2.25 HH
21	48755	Spring, Footplate
22	43602	Spacer, Footplate
23	04021-10	Locknut, 5/16-18 ES
24	4201787	Axle Support (RH)
	4201785	Axle Support (LH)
25	04001-09	Cap Screw, 5/16-18 x 1.00 HH
26	04001-32	Cap Screw, 3/8-16 x 1.25 HH
27	486758	Isolator, Footplate
28	04021-09	Locknut, 3/8-16 ES
29	485846	Plug, Bumper
30	494610	Frame Weldment, SVLS
31	428068	Fender (RH)
32	428067	Fender (LH)
33	481625-01	Knob w/ Stud
34	427316	Battery Box, Lower

Ref. No.	Part No.	Description
35	428066	Battery Box, Upper
36	485692	Battery Cover
37	427318	Battery Box, Latch
38	04003-02	Carriage Bolt, 1/4-20 x .75
39	04021-08	Locknut, 1/4-20 ES
40	04001-01	Cap Screw, 1/4-20 x .75 HH
41	04040-14	Flat Washer, 1/4-.312 x .750 x .065
42	48661	Rubber Pad
43	452870	Caster Support Weldment (Incl. 49)
44	04001-28	Cap Screw, 7/16-14 x 1.25 HH
45	04117-05	Locknut, 7/16-14 FLG HH ES
46	453208	Yoke Weldment
47	484195	Cap, Grease
48	04021-20	Jam Nut, 1-14 ES HH
49	48668	Bearing w/ Race
50	481025	Seal, 2.00 OD x 1.625 Bore
51	04001-80	Cap Screw, 1/2-13 x 6.50 HH
52	04021-07	Locknut, 1/2-13 ES
53	487686	Grass Shield, Caster
54	487685	Bearing, Caster
55	487931	Spanner, Caster
56	487929	Caster Wheel Assy (Incl. 54, 55)
57	463837	Belt Cover
58	481625-01	Knob w/ Stud

STEERING CONTROLS

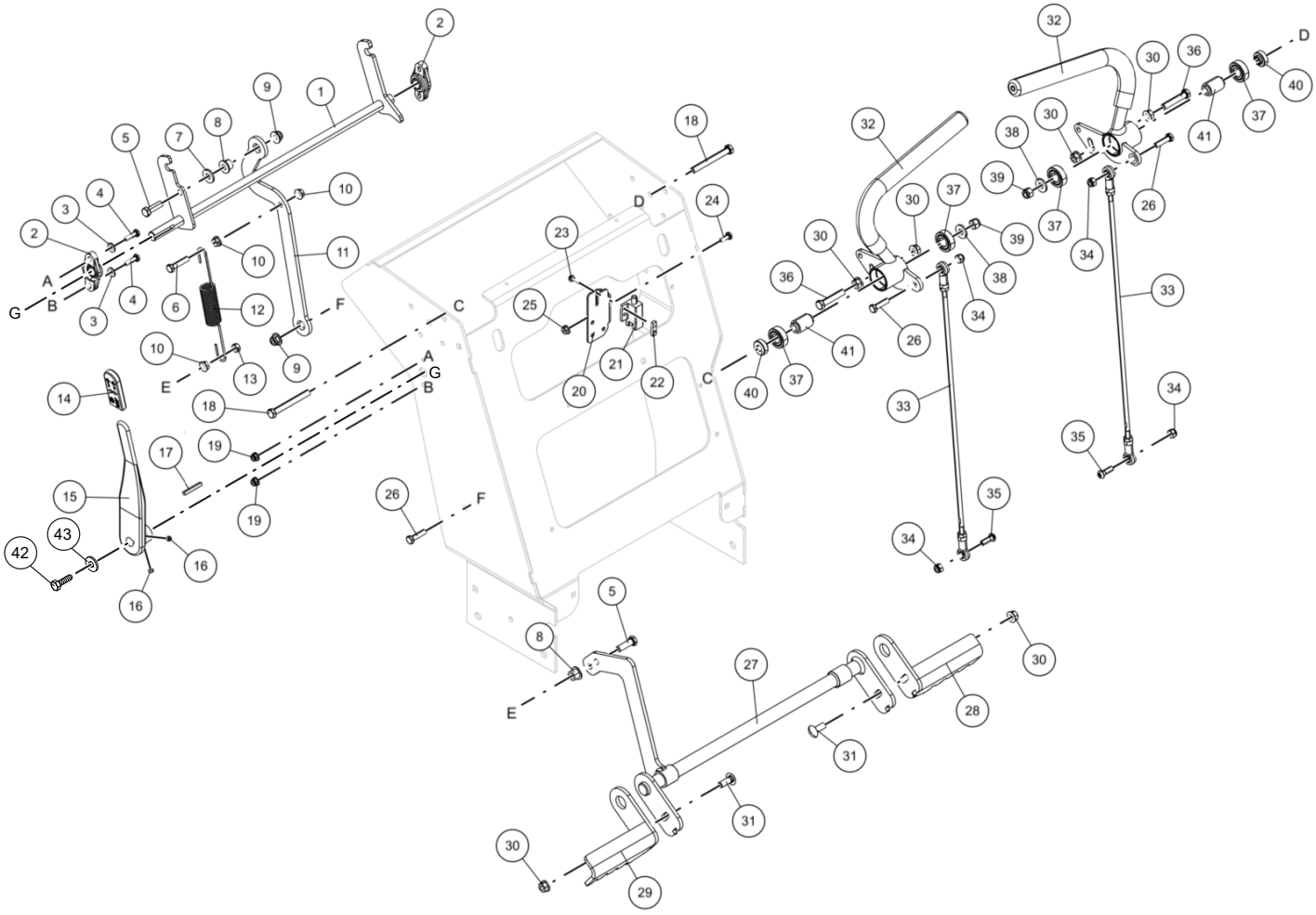

STEERING CONTROLS

Ref. No.	Part No.	Description
1	463392	Lock Weldment, Neutral
2	483504	Bearing, Spherical Flange
3	04040-03	Flat Washer, 1/4-.281 x .625 x .065 Type A
4	04001-14	Cap Screw, 1/4-20 x 1.00 HH
5	04001-32	Cap Screw, 3/8-16 x 1.25 HH
6	04001-11	Cap Screw, 5/16-18 x 1.50 HH
7	04041-07	Flat Washer, 3/8-.391 x .938 x .105
8	48100-30	Bushing, Bronze .376 ID x .627 OD
9	04117-02	Locknut, 3/8-16 FLG HH ES
10	04019-03	Nut, 5/16-18 SERR FLG
11	427538	Link, Brake Engage
12	484038	Spring
13	04021-04	Locknut, 5/16-18 Center Lock
14	486696	Grip, Brake Lever
15	463265	Lever Assy., Brake
16	04012-03	Set Screw, 5/16-18 x .25
17	04063-05	Key, 3/16 x 3/16 x 1.50
18	04001-62	Cap Screw, 3/8-16 x 3.25
19	04117-03	Locknut, 1/4-20 FLG HH ES
20	427269	Bracket, Neutral Switch
21	481545	Switch, Interlock
22	422373	Plate, Threaded
23	04010-12	Screw, #10-32 x .75 HWH
24	04001-01	Cap Screw, 1/4-20 x .75 HH
25	04019-02	Nut, 1/4-20 SERR FLG
26	04001-10	Cap Screw, 5/16-18 x 1.25 HH
27	453139	Shaft, Brake Bellcrank
28	452883	Brake Paddle (RH)
29	452882	Brake Paddle (LH)
30	04019-04	Nut, 3/8-16 SERR FLG
31	04003-23	Carriage Bolt, 3/8-16 x 1.00
32	463852	Handlebar Assy. (LH) (Incl. 37, 41)
	463853	Handlebar Assy. (RH) (Incl. 37, 41)
	484092	Grip, Control Lever

Ref. No.	Part No.	Description
33	485842	Linkage Assy., Steering
	485841	Link, Steering
	484073	Rod End (LH)
	482072	Rod End (RH)
	04020-30	Jam Nut, 5/16-24 (LH)
	04020-31	Jam Nut, 5/16-24 (RH)
34	04021-10	Locknut, 5/16-18 ES
35	04108-02	Cap Screw, 5/16-18 x 1.00 HSH
36	04001-45	Cap Screw, 3/8-16 x 2.00 HH
37	48224	Bearing, Jackshaft
38	04043-04	Flat Washer, 3/8-.391 x .938 x .105 HD
39	04021-09	Locknut, 3/8-16 ES
40	431024	Spacer, Controls
41	43600	Spacer, Bearing
42	04001-09	Cap Screw, 5/16-18 x 1.00 UNC HH
43	04040-15	Flat Washer, 5/16 - .375 x .875 x .083

FUEL SYSTEM AND ENGINE EXHAUST

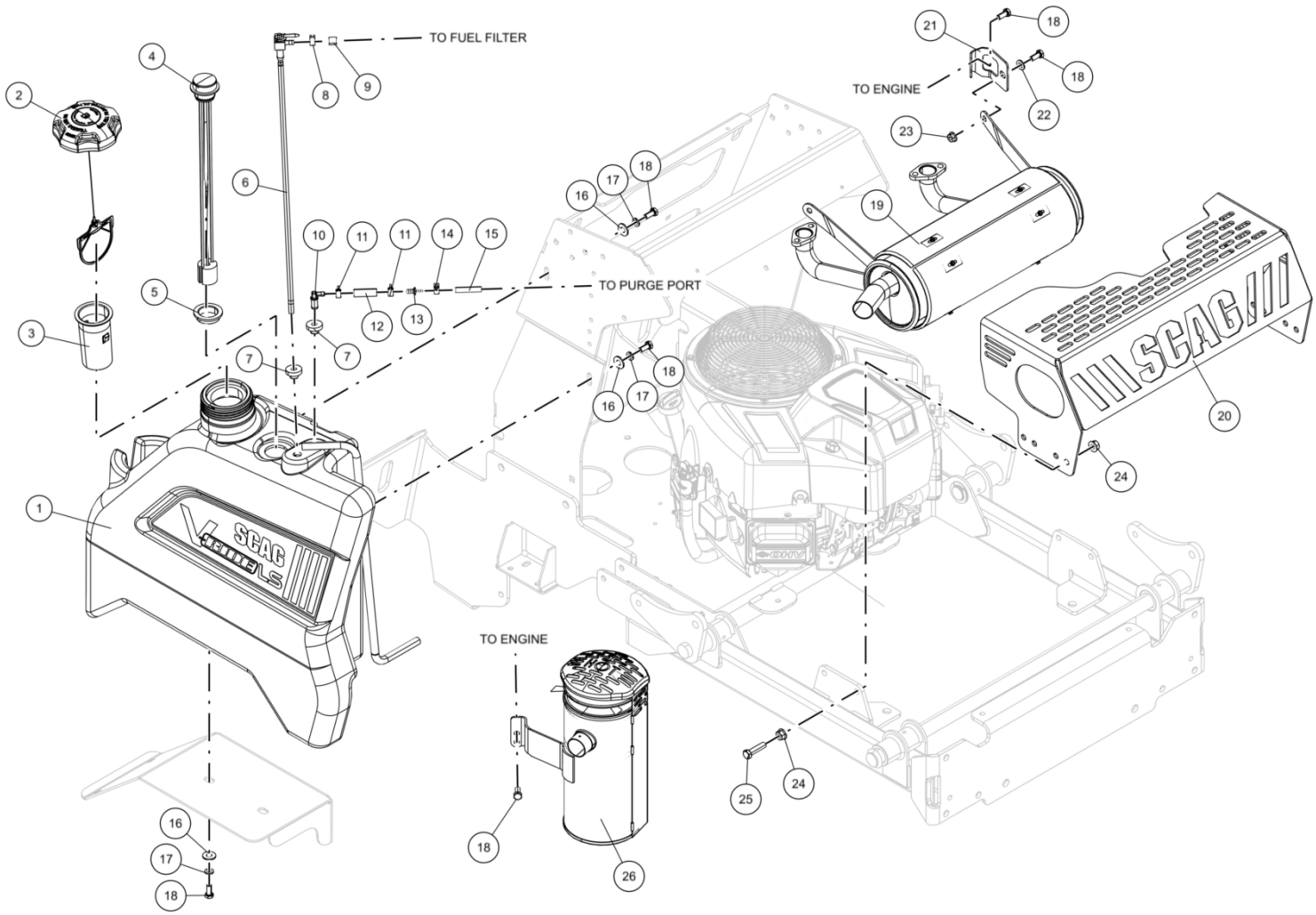

FUEL SYSTEM AND ENGINE EXHAUST

Ref. No.	Part No.	Description
1	463836	Fuel Tank Assy. (Incl. 4, 5, 6, 7, 10)
2	484286	Fuel Cap w/ Tether
3	484279-01	Tube, Fuel Inlet
4	485914	Fuel Gauge Assy. (Incl. 5)
5	484242	Seal, Fuel Gauge
6	485913	Valve, Fuel Shutoff
7	482571	Bushing
8	48059-01	Clamp, Fuel Hose 1/4" ID
9	483617	Hose, Fuel Non Perm (Order By Inch)
10	486852	Remote Vent
11	48059-02	Clamp, Fuel Hose 7/32" ID
12	484347	Hose, Vapor Return 1/4"
13	484343-01	Mender, 1/4" x 3/16" w/ .02 Hole
14	48059-05	Clamp, Vapor Hose
15	484345	Hose, Vapor Recovery 3/16" (Order By Inch)
16	04040-15	Flat Washer, 5/16-.375 x .875 x .083
17	04030-03	Lock Washer, 5/16 Helical Spring
18	04001-08	Cap Screw, 5/16-18 x .75 HH
19	487480	Muffler, B&S Vanguard CX
	488487	Muffler, Kawasaki 18FSE
	486815	Muffler, Kawasaki 22FSE
20	429380	Heat Shield, Muffler
21	428449	Mounting Bracket, Muffler
22	04040-04	Flat Washer, 5/16-.344 x .688 x .065
23	04019-03	Nut, 5/16-18 SERR FLG
24	04019-04	Nut, 3/8-16 SERR FLG
25	04001-136	Cap Screw, 3/8-16 x 1.50 HH GR 8
26	484620	Muffler, Kawasaki 18FSE
	485571	Muffler, Kawasaki 22FSE
*	485572	Exhaust Manifold, 22FSE

* Item not shown.

DRIVE SYSTEM COMPONENTS

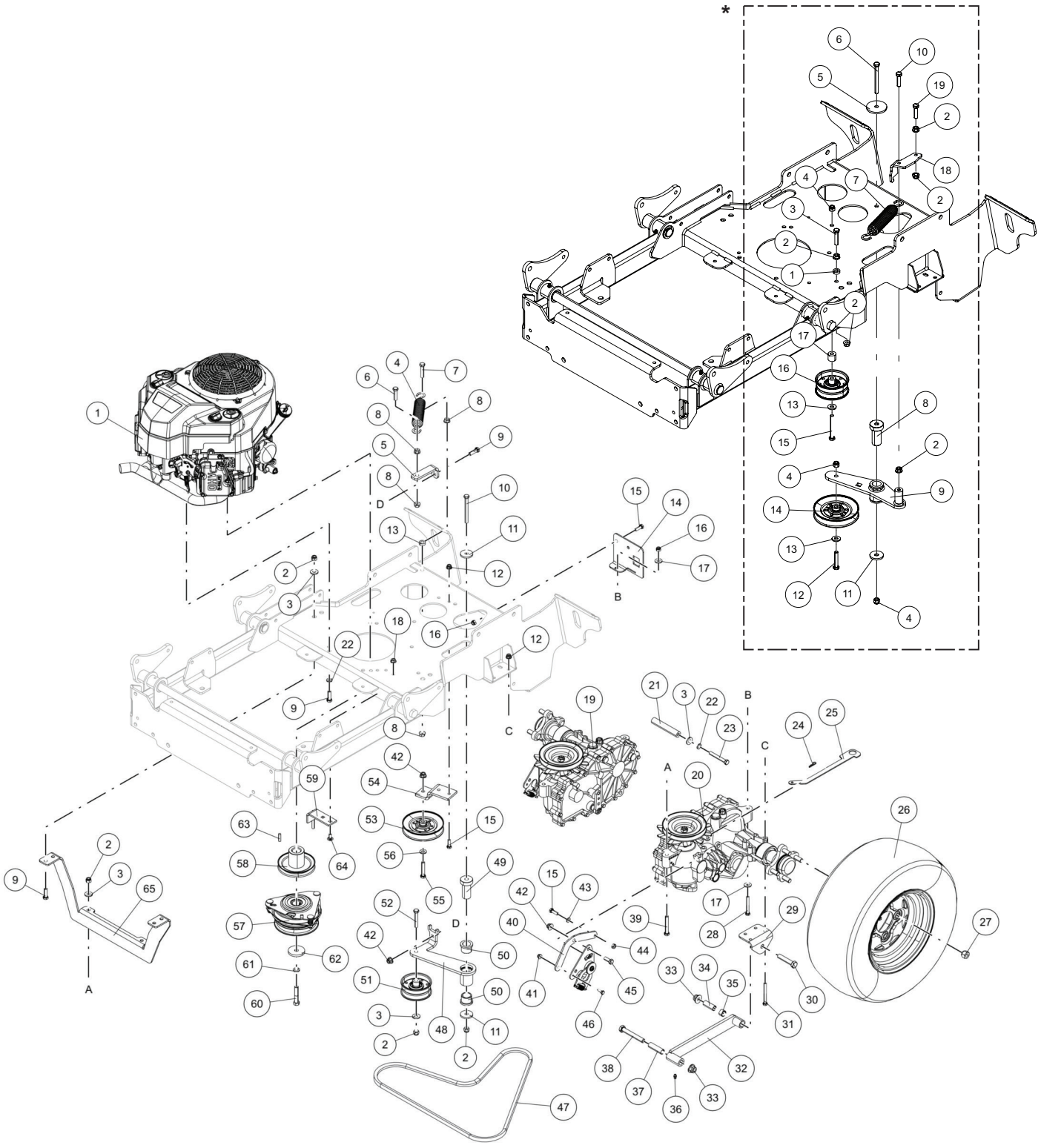

* (206D00001 – 206D00275, 215D00001 – 215D00125)

DRIVE SYSTEM COMPONENTS

Ref. No.	Part No.	Description
1	*	Engine, B&S Vanguard 20CX (40T8770026G1)
	*	Engine, B&S Vanguard 25CX (44T9770043G1)
	*	Engine, Kawasaki 18FSE (FS600V-T12-R)
	*	Engine, Kawasaki 22FSE (FS651V-DS10)
2	04021-09	Locknut, 3/8-16 ES
3	04043-04	Flat Washer, 3/8-.391 x .938 x .105 HD
4	483112	Spring
5	4202030	Bracket, Spring Anchor
6	04001-136	Cap Screw, 3/8-16 x 1.50 HH GR 8
7	04001-135	Cap Screw, 3/8-16 x 1.75 HH
8	04019-04	Nut, 3/8-16 SERR FLG
9	04001-32	Cap Screw, 3/8-16 x 1.25 HH
10	04001-51	Cap Screw, 3/8-16 x 3.75 HH
11	04041-11	Flat Washer, 3/8-.406 x 1.50 x .1793
12	04117-01	Locknut, 5/16-18 FLG HH ES
13	43063	Spacer, Clutch Control
14	4201785	Axle Support (LH)
	4201787	Axle Support (RH)
15	04001-09	Cap Screw, 5/16-18 x 1.00 HH
16	04021-10	Locknut, 5/16-18 ES
17	04040-15	Flat Washer, 5/16-.375 x .875 x .083
18	04019-03	Nut, 5/16-18 SERR FLG
19	488979	Transaxle Assy., ZT-3100 (RH) (ZL-GCEF-9D7B-26TX)
20	488978	Transaxle Assy., ZT-3100 (LH) (ZL-KCEF-9D7C-36TX)
21	431439	Spacer, Axle
22	04030-04	Lock Washer, 3/8 Helical Spring
23	04001-22	Cap Screw, 3/8-16 x 2.75 HH
24	04062-02	Cotter Pin
25	428623	Lever, Dump Valve
26	485920	Wheel Assy., 20 x 8.00-10
27	04028-02	Wheel Nut
28	04001-53	Cap Screw, 5/16-18 x 2.50 HH

Ref. No.	Part No.	Description
29	424489	Bracket, Pusharm Link
30	04001-52	Cap Screw, 1/2-13 x 2.50 HH
31	04001-49	Cap Screw, 5/16-18 x 3.00
32	463844	Pusharm Assy. (Incl. 35, 36)
33	04117-04	Locknut, 1/2-13 FLG HH ES
34	43986	Spacer, Pusharm
35	483453-18	Bearing, Plastic
36	48114-04	Grease Fitting
37	43985	Spacer, Pusharm
38	04001-145	Cap Screw, 1/2-13 x 3.50 HH
39	04001-31	Cap Screw, 3/8-16 x 2.50 HH
40	4201855	Arm, Pump Control
41	04117-03	Locknut, 1/4-20 FLG HH ES
42	04117-02	Locknut, 3/8-16 FLG HH ES
43	04030-03	Lock Washer, 5/16 Helical Spring
44	04021-04	Locknut, 5/16-18 Center Lock
45	04001-19	Cap Screw, 3/8-16 x 1.00 HH
46	04001-01	Cap Screw, 1/4-20 x .75 HH
47	486649	Belt, Pump Drive
48	463900	Idler Arm Assy. w/ Bushings (Incl. 50)
49	43708	Pivot, Idler
50	483453-03	Bearing, Plastic
51	486045	Idler Pulley, 3.50
52	04001-46	Cap Screw, 3/8-16 x 2.25 HH
53	48181	Idler Pulley
54	4202029	Mounting Bracket, Pulley
55	04001-45	Cap Screw, 3/8-16 x 2.00 HH
56	04043-07	Flat Washer, 3/8-.391 x .81 x .086 HD
57	462715	Electric Clutch Assy.
58	488976	Pulley, 4.50 Diameter
59	463668	Anti-Rotation Kit
60	04102-03	Cap Screw, 7/16-20 x 2.25 HH
61	04030-05	Lock Washer, 7/16 Helical Spring
62	04043-12	Flat Washer, 7/16-.469 x 2.00 x .25 HD
63	04063-20	Key, 1/4 x 1/4 x 1.00
64	04003-12	Carriage Bolt, 5/16-18 x .75
65	4201755	Bracket, Axle Mount

* Not available through Scag Power Equipment.

DRIVE SYSTEM COMPONENTS

(206D00001 – 206D00275, 215D00001 – 215D00125)

Ref. No.	Part No.	Description
1	43063	Spacer, Clutch Control
2	04019-04	Nut, 3/8-16 SERR FLG
3	04001-135	Cap Screw, 3/8-16 x 1.75 HH
4	04021-09	Locknut, 3/8-16 ES
5	04041-38	Flat Washer, 3/8-.406 x 2.25 x .1875
6	04001-51	Cap Screw, 3/8-16 x 3.75 HH
7	483112	Spring
8	43708	Pivot, Idler
9	463850	Idler Arm Assy. w/ Bushings
10	04001-136	Cap Screw, 3/8-16 x 1.50 HH GR 8

Ref. No.	Part No.	Description
11	04043-11	Flat Washer, 3/8-.438 x 1.50 x .1793 HD
12	04001-45	Cap Screw, 3/8-16 x 2.00 HH
13	04043-04	Flat Washer, 3/8-.391 x .938 x .105 HD
14	48181	Idler Pulley
15	04001-54	Cap Screw, 3/8-16 x 3.00 HH
16	486045	Idler Pulley, 3.50
17	43123	Spacer, Cam Pivot
18	4202024	Idler Arm Extension Bracket
19	04017-27	Cap Screw, 3/8-16 SERR FLG HH

* Item not shown.

CONTROL PANEL AND ELECTRICAL SYSTEM

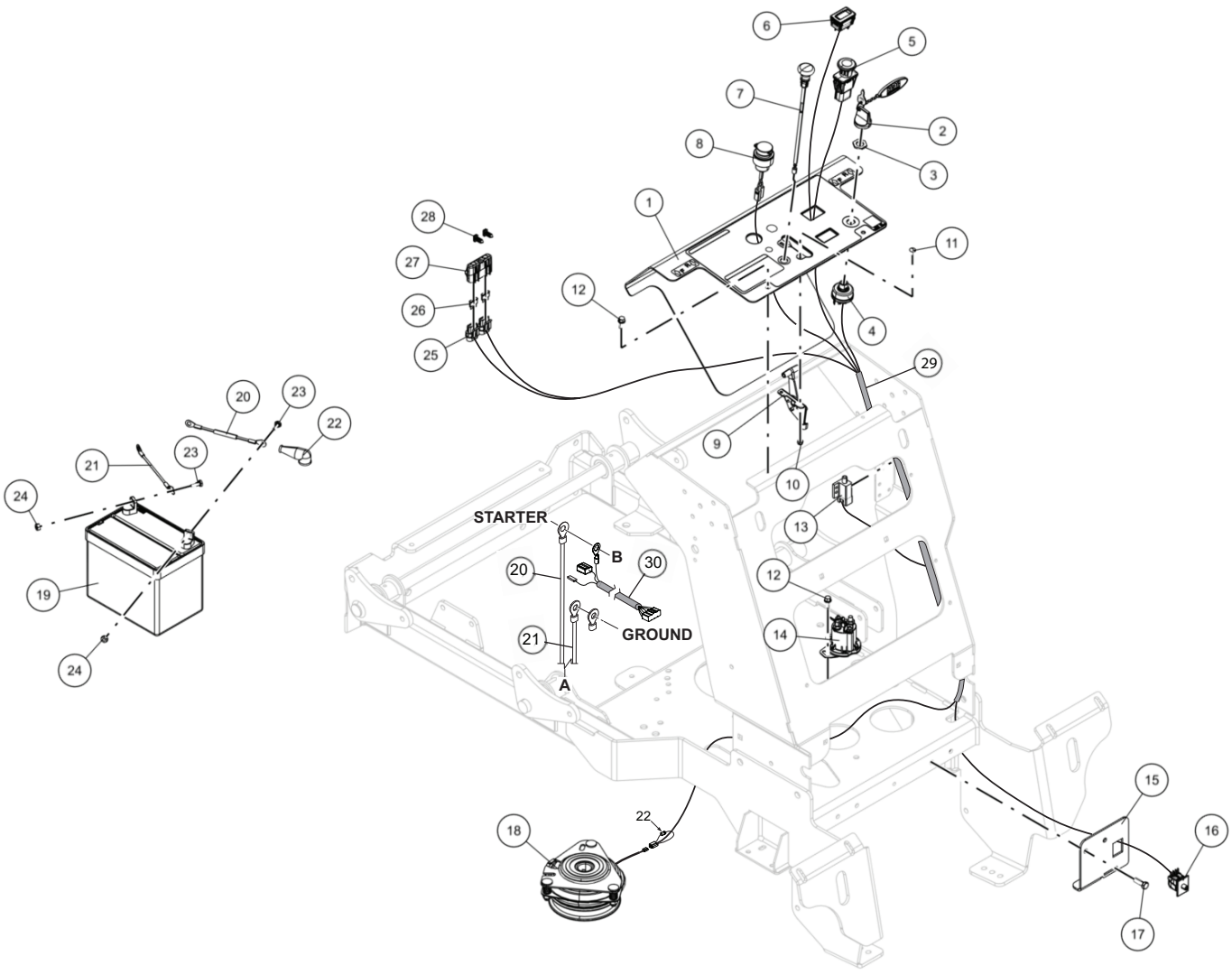

CONTROL PANEL AND ELECTRICAL SYSTEM

Ref. No.	Part No.	Description
1	463895	Instrument Panel w/ Decal
2	462069	Fob Assy. w/ Key
3	48017-04	Nut, 5/8-32 Special
4	48798	Starter Switch
5	485833	PTO Switch, Sealed
6	484565	Hour Meter, Inductive
7	483976	Choke Control
8	485568	Power Plug, 12V
9	483975	Throttle Control
10	04021-26	Locknut, #10-24
11	04003-43	Carriage Bolt, #10-24 x .50
12	04011-14	Screw, 1/4-20 x .75 TT
13	481545	Switch, Interlock
14	483278	Solenoid
15	4201785	Axle Support (LH)
	4201787	Axle Support (RH)
16	484497	Switch, Double Pole Plunger
17	04001-09	Cap Screw, 5/16-18 x 1.00
18	462715	Electric Clutch Assy.
19	*	Battery, 12V 350 CCA
20	48029-30	Battery Cable, Red 44"
21	48029-24	Battery Cable, Black 39"
22	48126	Rubber Boot
23	04001-01	Cap Screw, 1/4-20 x .75 HH
24	04020-02	Nut, 1/4-20 UNC
25	483629	Fuse Holder
26	48298	Fuse, 20 Amp
27	483571	Fuse Cover, Double
28	482588	Clip, Wire
29	486768	Wire Harness
30	485679	Harness Adapter, Kawasaki FSE
	487609	Harness Adapter, Briggs & Stratton CX

* Not available through Scag Power Equipment.

ZT-3100 HYDRAULIC TRANSAXLE ASSEMBLY

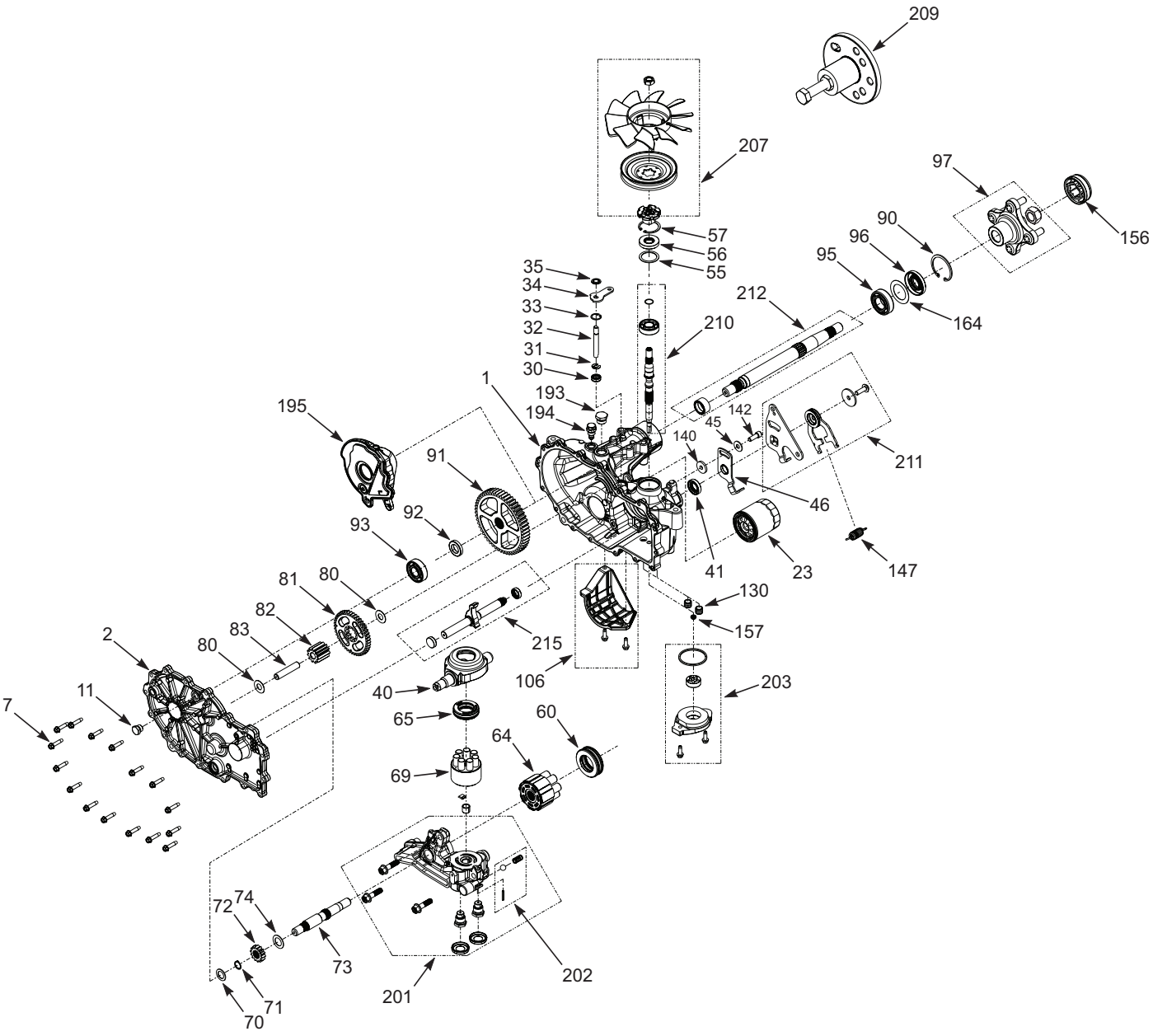

ZT-3100 HYDRAULIC TRANSAXLE ASSEMBLY

Ref. No.	Part No.	Description
1	HG73073	Kit, Housing (LH)
	HG73069	Kit, Housing (RH)
2	HG73096	Kit, Side Cover (LH)
	HG73095	Kit, Side Cover (RH)
7	HG53246	Screw, Hex Washer
11	HG54730	Plug, 9/16-18
23	HG52114	Oil Filter
30	HG55232	Seal, Lip .375 x .75 x .25
31	HG51628	Ring, Retaining External .375
32	HG52136	Rod, Bypass .375 x 2.88
33	HG51627	Ring, Retaining .750, Internal
34	HG52370	Arm, Bypass
35	HG51630	Ring, Retaining .375, External
40	HG51048	Swashplate, Trunnion
41	HG51140	Seal, Lip 18 x 32 x 7
45	HG44130	Washer, .34 x .88 x .06 Flat
55	HG50951	Washer, 1.23 x 1.57 x .04 Flat
56	HG55486	Seal, Lip 17 x 40 x 7 HNBR
57	HG50329	Ring, Retaining Internal
60	HG51462	Bearing, Thrust 35 x 62 x 18
64	HG72882	Kit, 16cc Cylinder Block Assy.
65	HG50551	Bearing, Thrust 30 x 52 x 13
69	HG70723	Kit, Block 7 Piston
70	HG44371	Washer, .63 x 1.00 x .05 Flat
71	HG44145	Retaining Ring, Motor Shaft
72	HG52341	Gear, 14T (Steel)
73	HG52150	Shaft, Motor
74	HG51069	Washer, .71 x 1.16 x .04 Flat
80	HG50132	Washer, .51 x 1.00 x .03 Flat
81	HG52110	Gear, 45T
82	HG52586	Gear, 11T (Steel)
83	HG55710	Pin, Jackshaft
90	HG50859	Ring, Retaining 2.25 Internal
91	HG52108	Gear, 54T
92	HG53336	Spacer, .756 x 1.320 x .257
93	HG72749	Kit, Bearing
95	HG53656	Bearing, 25.4 x 52 x 15 Ball
96	HG56415	Seal, .97 x 2.06 x .40 Lip TC4

Ref. No.	Part No.	Description
97	HG71405	Kit, Hub (4 Bolt)
106	HG71854	Kit, Filter Guard (LH)
	HG73041	Kit, Filter Guard (RH)
130	HG54501	Tube, Charge Triple O-Ring
140	HG54315	Spacer, .320 ID x 1.005 OD x .1495 THK
141	HG51946	Arm, Return (LH)
	HG51945	Arm, Return (RH)
142	HG51616	Cap Screw, 5/16-24 x 7/8 SH
147	HG52401	Spring, Extension
156	HG53088	Cap, Axle
157	HG72291	Kit, Gerotor Seal
164	HG53514	Washer, 1.355 x 2.035 x .021 Flat
193	HG54974	Plug, 3/4-16
194	HG55789	Breather Fitting Assy., 9/16-18
195	HG55072	Expansion Tank Assy. (LH)
	HG55071	Expansion Tank Assy. (RH)
201	HG71566	Kit, Center Selection (LH)
	HG71565	Kit, Center Selection (RH)
202	HG71436	Kit, Charge Relief
203	HG72274	Kit, Charge
207	HG72980	Kit, Fan/Pulley
209	HG72320	Kit, Hub Puller
210	HG73047	Kit, Input Shaft
211	HG71592	Kit, RTN Assy. (LH)
	HG71588	Kit, RTN Assy. (RH)
212	HG71569	Kit, Shaft Axle
215	HG73121	Kit, Inboard (LH)
	HG73120	Kit, Inboard (RH)
*	HG73629	Seal Kit (Incl. 30, 31, 33, 35, 41, 56, 57, 71, 157)

* Item not shown.

REPLACEMENT DECALS



1



2



3



4

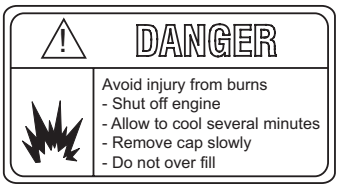

5

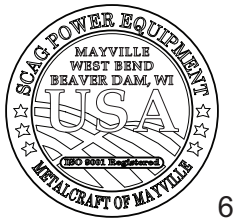

6

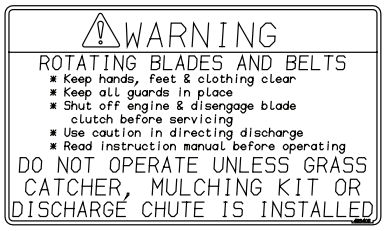

7

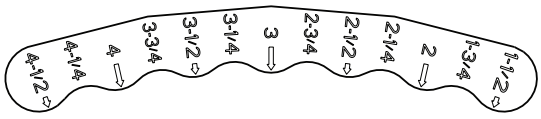

8

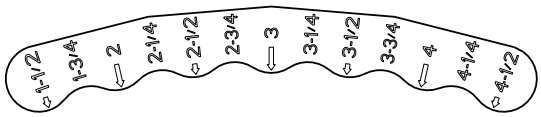

9



10

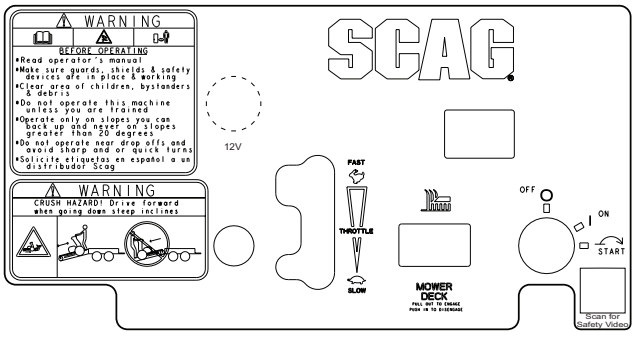

11



12

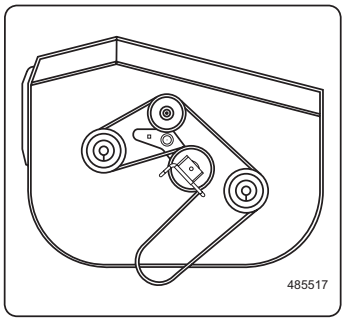

13



14

REPLACEMENT DECALS

Ref. No.	Part No.	Description
1	487212	Decal, Belt Cover Warning
2	483405	Decal, Discharge Chute Warning
3	483505	Decal, Spinning Blades Warning
4	486797	Decal, 36H
	486896	Decal, 42H
	486798	Decal, 48H
	486799	Decal, 52H
5	485667	Decal, Fuel Safety Warning
6	485403	Decal, Metalcraft - USA
7	483406	Decal, Blades and Belts Warning
8	485798	Decal, Deck Height (Outer)
9	485826	Decal, Deck Height (Inner)
10	484453	Decal, SCAG Heavy-Duty Commercial
11	489030	Decal, Instrument Panel
12	482100	Decal, Travel Controls
13	485517	Decal, Belt Routing (36H)
	485518	Decal, Belt Routing (42H, 48H, 52H)
14	488991	Decal, SCAG V-Ride LS (Fuel Tank)

ELECTRICAL SCHEMATICS (HARNESS)

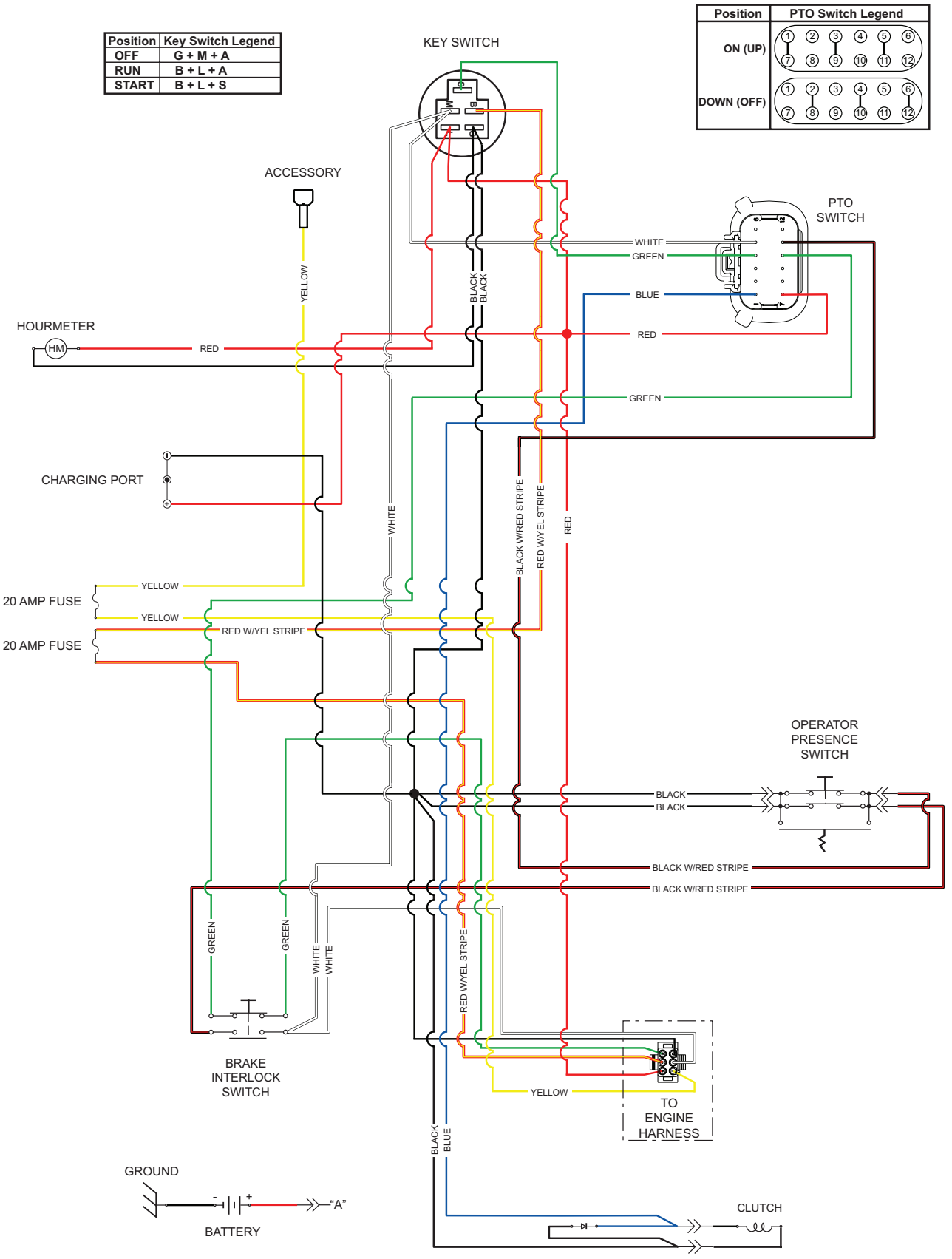

ELECTRICAL SCHEMATICS (ADAPTERS)

KAWASAKI FSE ENGINE ADAPTER WIRE HARNESS

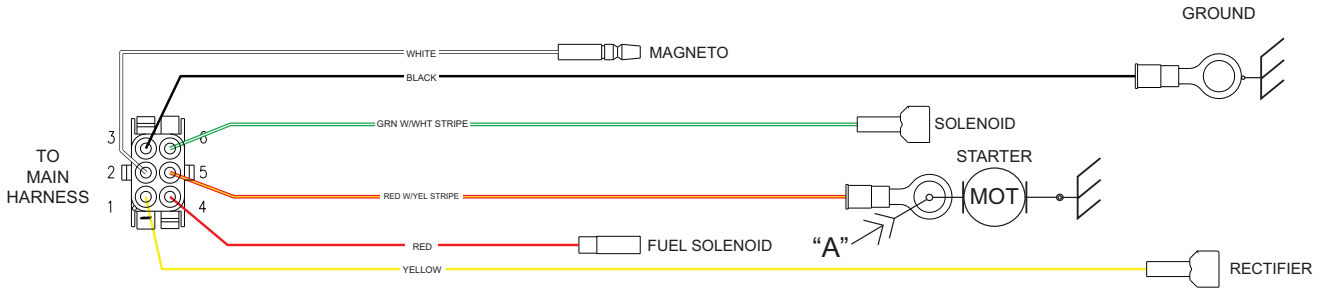

BRIGGS AND STRATTON CX ENGINE ADAPTER WIRE HARNESS

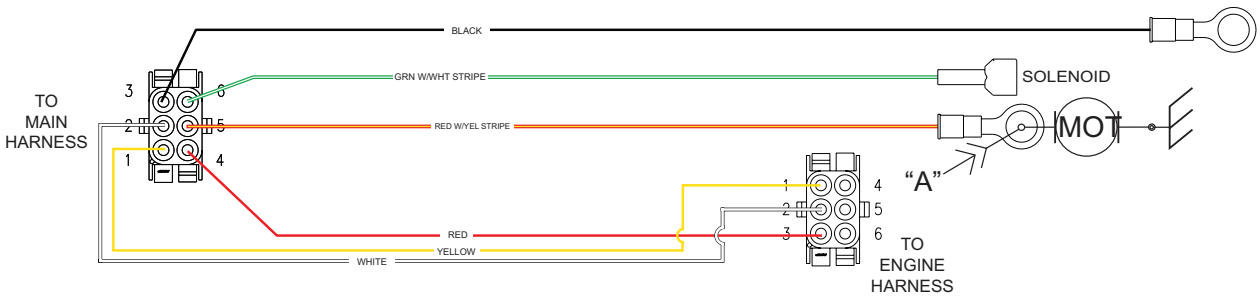

NOTES

PAGE LEFT INTENTIONALLY BLANK

LIMITED WARRANTY - SVLS

Any part of the Scag commercial mower manufactured by Scag Power Equipment and found, in the reasonable judgment of Scag, to be defective in materials or workmanship, will be repaired or replaced by an Authorized Scag Service Dealer without charge for parts and labor during the periods specified below. This warranty is limited to the original purchaser provided the product was purchased from an Authorized Scag Power Equipment Dealer and is not transferable. Proof of purchase will be required by the dealer to substantiate any warranty claims. All warranty work must be performed by an Authorized Scag Service Dealer.

This warranty is limited to the following specified periods from the date of the original retail purchase for defects in materials or workmanship:

- Wear items including drive belts, blades and tires are warranted for ninety (90) days.
- Batteries are covered for ninety (90) days.
- Frame and structural components including oil reservoir and oil coolers are warranted for two (2) years (parts and labor) for commercial use or three (3) years / 500 hours (whichever comes first) (parts and labor) for non-commercial use.
- Cutter decks are warranted against cracking for a period of three (3) years. (parts and labor 1st and 2nd year; parts only 3rd year.) The repair or replacement of the cutter deck will be at the option of Scag Power Equipment. We reserve the right to request components for evaluation. This warranty does not cover any mower that has been subject to misuse, neglect, negligence, accident, or that has been operated in any way contrary to the operating instructions as specified in the Operator's Manual.
- Engines and electric starters are covered by the engine manufacturer's warranty period.
- Major drive system components are warranted for two (2) years (parts and labor) for commercial use or three (3) year / 500 hour (whichever comes first) (parts and labor) for non-commercial use by Scag Power Equipment. (commercial and non-commercial warranty excludes fittings, hoses, drive belts). The repair or replacement of the hydraulic axles will be at the option of Scag Power Equipment. This warranty does not cover any mower that has been subject to misuse, neglect, negligence, or accident, or that has been operated in any way contrary to the operating instructions as specified in the Operator's Manual.
- Electric clutches have a Limited Warranty for two (2) years (parts and labor) for commercial use or three (3) year / 500 hours (whichever comes first) (parts and labor) for non-commercial use.
- Spindle assemblies have a Limited Warranty for two (2) years (parts and labor 1st and 2nd year) for commercial use or three (3) years / 500 hours (whichever comes first) (First and second year of the warranty covers parts and labor. The third year covers parts only) for non-commercial use.
- Any Scag product used for rental purposes is covered by a 90 day warranty.

The Scag mower, including any defective part, must be returned to an Authorized Scag Service Dealer within the warranty period. The expense of delivering the mower to the dealer for warranty work and the expense of returning it to the owner after repair will be paid for by the owner. Scag's responsibility is limited to making the required repairs and no claim of breach of warranty shall be cause for cancellation or rescission of the contract of sale of any Scag mower. "Non-Commercial" use is defined as a single property owner, where the single property is the residence of the owner of the mower. If the mower is cutting more than the owners single property, it is deemed commercial use and the "non-commercial" warranty does not apply. Scag Power Equipment reserves the right to deny and / or void the non-commercial warranty if it believes it to be in commercial use.

This warranty does not cover any mower that has been subject to misuse, neglect, negligence, accident, or that has been operated in any way contrary to the operating instructions as specified in the Operator's Manual. The warranty does not apply to any damage to the mower that is the result of improper maintenance, or to any mower or parts that have not been assembled or installed as specified in the Operator's Manual. The warranty does not cover any mower that has been altered or modified, changing performance or durability. In addition, the warranty does not extend to repairs made necessary by normal wear, or by the use of parts or accessories which, in the reasonable judgment of Scag, are either incompatible with the Scag mower or adversely affect its operation, performance, or durability.

Scag Power Equipment reserves the right to change or improve the design of any mower without assuming any obligation to modify any mower previously manufactured. All other implied warranties are limited in duration to the two (2) year for commercial use, three (3) years / 500 hour for non-commercial use or ninety (90) days for mowers used for rental purpose. Accordingly, any such implied warranties including merchantability, fitness for a particular purpose, or otherwise are disclaimed in their entirety after the expiration of the appropriate two (2) year for commercial use, three (3) years / 500 hour for non-commercial use or ninety day warranty period. Scag's obligation under this warranty is strictly and exclusively limited to the repair or replacement of defective parts and Scag does not assume or authorize anyone to assume for them any other obligation. Some states do not allow limitations on how long an implied warranty lasts, so the above limitation may not apply to you.

Scag assumes no responsibility for incidental, consequential or other damages including, but not limited to: expense for fuel; expense of delivering the mower to an Authorized Scag Service Dealer and expense of returning the mower to the owner; mechanic's travel time; telephone or communication charges; rental of a like product during the time warranty repairs are being performed; travel, loss, or damage to personal property; loss of revenue; loss of use of the mower; loss of time; inconvenience. Some states do not allow the exclusion or limitation of incidental or consequential damages, so the above limitation or exclusion may not apply to you. This warranty gives you specific legal rights, and you may also have other rights which vary from state to state.

For additional questions regarding the warranty terms and conditions, contact Scag Power Equipment online at:

https://www.scag.com/company/contact-us/



Scag Power Equipment Headquarters
1000 Metalcraft Drive
Mayville, Wisconsin 53050
1.920.644.8100

Mailing Information
PO Box 152
Mayville, Wisconsin 53050

© 2027
Scag Power Equipment
Division of Metalcraft of Mayville, Inc.