SCAG POWER EQUIPMENT

OPERATOR'S MANUAL

SWZ
Walk-Behind



© 2027
Scag Power Equipment
Division of Metalcraft of Mayville, Inc.

PART NO. 03603
PRINTED 10/2026
PRINTED IN USA

Congratulations on owning a Scag mower! This manual contains the operating instructions, safety information, and illustrated parts list for your machine. Reading this manual can provide you with assistance in maintenance and adjustment procedures to keep your machine performing at maximum efficiency. Please read all the information enclosed in this manual before operating your machine.

The QR code on the front cover of this manual can be scanned with your mobile device to access manuals, parts lists, and other product information on the official Scag website.

This manual covers the operating instructions and illustrated parts list for:		
SWZ-36A-14FS	with a serial number of	040D00001 to 040D99999
SWZ-48V-15FSE	with a serial number of	041D00001 to 041D99999
SWZ-52V-18FSE	with a serial number of	042D00001 to 042D99999
SWZ-14FSE-16	with a serial number of	043D00001 to 043D99999
SWZ-15SE-16	with a serial number of	044D00001 to 044D99999
SWZL-52V-22FSE	with a serial number of	045D00001 to 045D99999
SWZL-61V-22FSE	with a serial number of	046D00001 to 046D99999
Always use the entire serial number listed on the serial number tag when referring to this product.		

Model Number:	Serial Number:

Please use the table provided above to record the model number and serial number located on your machine for future reference.

⚠ WARNING

YOUR MACHINE IS ONLY AS SAFE AS THE OPERATOR. HAZARD CONTROL AND ACCIDENT PREVENTION ARE DEPENDENT UPON THE AWARENESS, CONCERN, PRUDENCE, AND PROPER TRAINING OF THE PERSONNEL INVOLVED IN THE OPERATION, TRANSPORT, MAINTENANCE, AND STORAGE OF THE EQUIPMENT.

- **Carefully read and understand the safety and operating instructions described in this manual. Always keep a copy of this manual with the machine.**
- **Ensure every operator is properly trained and thoroughly familiar with all controls and procedures before operating the machine.**
- **Always follow OSHA-approved operating procedures when operating the machine.**
- **Keep all shields, guards, and plates in place when operating the machine. Do not remove the grass discharge chute while the machine is running.**
- **Stay two machine widths away from slopes, drop-offs, ditches, embankments, retaining walls, water, or other obstacles.**
- **Do not mow on wet grass. Wet grass reduces traction and steering control.**
- **Keep hands, feet, and clothing away from moving parts at all times.**
- **Do not carry passengers on the machine.**
- **Do not operate the machine when children or bystanders are present.**
- **If a mechanism becomes clogged during operation, stop the engine before cleaning.**
- **Before performing any maintenance or service, stop the machine and remove the ignition key.**

⚠ WARNING

CALIFORNIA PROPOSITION 65

The engine exhaust produced by this machine contains chemicals known to the State of California to cause cancer, birth defects, or other reproductive harm.

Battery posts, terminals, and related accessories for this machine contain lead and lead compounds, chemicals known to the State of California to cause cancer, birth defects, or other reproductive harm. Wash hands after handling components.

The use of this machine may expose the operator to chemicals known to the State of California to cause cancer, birth defects, or other reproductive harm.

NOTES

PAGE LEFT INTENTIONALLY BLANK

Table of Contents

SECTION 1 - INTRODUCTION 1
1.1 GENERAL INFORMATION 1
1.2 MANUAL CONVENTIONS 1
DIRECTIONAL REFERENCES 1
SAFETY ALERTS 1
1.3 SERVICING YOUR MACHINE 2
AUTHORIZED SCAG DEALERS 2
ENGINE AND DRIVETRAIN COMPONENTS 2
ATTACHMENTS AND ACCESSORIES 2
1.4 SYMBOLS 3

SECTION 2 - SAFETY INFORMATION 4
2.1 INTRODUCTION 4
2.2 BEFORE OPERATION SAFETY 4
GENERAL CONSIDERATIONS 4
PROTECTING CHILDREN 5
FUEL & FLUID SAFETY 5
SAFETY INTERLOCK SYSTEM 6
POWER TAKE-OFF (PTO) SYSTEM 6
2.3 DURING OPERATION SAFETY 7
GENERAL CONSIDERATIONS 7
SLOPE OPERATION 8
2.4 AFTER OPERATION SAFETY 8
GENERAL CONSIDERATIONS 8
MAINTENANCE SAFETY 8
STORAGE & TRANSPORTATION SAFETY 9
2.5 SPARK IGNITION SYSTEM 10
2.6 USE OF A SPARK ARRESTOR 10
2.7 SAFETY AND INSTRUCTIONAL DECAL DETAILS 11

SECTION 3 - SPECIFICATIONS 12
3.1 ENGINE 12
3.2 ELECTRICAL 12
3.3 DRIVE SYSTEM 12
3.4 CUTTER DECK 13
3.5 WEIGHTS AND DIMENSIONS 13
3.6 PRODUCTIVITY 13

SECTION 4 - OPERATING INSTRUCTIONS 14
4.1 CONTROLS & INSTRUMENT IDENTIFICATION 14
4.2 SAFETY INTERLOCK SYSTEM 15
4.3 TESTING THE SAFETY INTERLOCK SYSTEM 15
4.4 INITIAL RUN-IN PROCEDURES 15
4.5 STARTING THE ENGINE 16
4.6 GROUND TRAVEL AND STEERING 16
4.7 ENGAGING THE DECK DRIVE (CUTTER BLADES) 17
4.8 HILLSIDE OPERATION 17
4.9 PARKING THE MOWER 17
4.10 AFTER OPERATION 17
4.11 REMOVING CLOGGED MATERIAL 18
4.12 MOVING MOWER WITH ENGINE STOPPED 18
4.13 RECOMMENDATIONS FOR MOWING 18

SECTION 5 - TROUBLESHOOTING CUTTING CONDITIONS 20

SECTION 6 - ADJUSTMENTS 23
6.1 PARKING BRAKE ADJUSTMENT 23
6.2 NEUTRAL ADJUSTMENT 23
6.3 STEERING CONTROL ROD ADJUSTMENTS 23
6.4 TRACKING ADJUSTMENT 24
6.5 THROTTLE CONTROL & CHOKE ADJUSTMENTS 24
6.6 CUTTER DECK BELT ADJUSTMENTS 24
6.7 BELT ALIGNMENT 25
6.8 ADJUSTING CUTTING HEIGHT 25
6.9 ELECTRIC CLUTCH ADJUSTMENT 28

SECTION 7 - MAINTENANCE 29
7.1 MAINTENANCE CHART - RECOMMENDED SERVICE INTERVALS 29
7.2 LUBRICATION 31
7.3 HYDRAULIC SYSTEM 32
7.4 ENGINE OIL 33
7.5 ENGINE FUEL SYSTEM 33
7.6 ENGINE AIR CLEANER 34
7.7 BATTERY - ELECTRIC START MODELS 34
7.8 CUTTER BLADES 35
7.9 TIRES 36

SECTION 8 - ILLUSTRATED PARTS LIST 37
SCAG APPROVED ATTACHMENTS AND ACCESSORIES. 37
CASTER ASSEMBLY 39
36A CUTTER DECK 41
48V & 52V CUTTER DECKS 43
61V CUTTER DECK 45
ENGINE DECK - MANUAL START 47
ENGINE DECK - ELECTRIC START 49
DRIVE AND BRAKE COMPONENTS 51
HANDLE ASSEMBLY - RECOIL START 53
HANDLE ASSEMBLY - ELECTRIC START 55
SWZ FUEL SYSTEM 57
HYDRAULIC ASSEMBLY 59
HYDRAULIC PUMP ASSEMBLY 61
WIRE HARNESSES 63
SWZ ELECTRICAL SCHEMATIC - RECOIL START 64
SWZ ELECTRICAL SCHEMATIC - ELECTRIC START 65
REPLACEMENT DECALS 68

LIMITED WARRANTY - COMMERCIAL EQUIPMENT .....INSIDE BACK COVER

NOTES

PAGE LEFT INTENTIONALLY BLANK

INTRODUCTION

1.1 GENERAL INFORMATION

Your Scag mower was built to the highest standards in the industry. However, the prolonged life and maximum efficiency of your machine depend on you following the operating, adjustment, and maintenance instructions in this manual.

Carefully read the safety and operating instructions in this manual before attempting to operate your machine. You are responsible for the safe and proper operation of your machine.

IMPORTANT

For illustrative clarity, some graphics in this manual may show shields, guards, or covers removed from the machine. Under no circumstances should your machine be operated without these devices secured in place.

All information in this manual is based on product information available at the time of approval for printing. Scag Power Equipment reserves the right to make changes to this manual at any time without notice and without incurring any obligation. **Please visit the official Scag Power Equipment website (www.scag.com) for updated manual releases.**

A replacement manual is available from the following sources: your Authorized Scag Dealer, the Scag Power Equipment Service Department (PO Box 152; Mayville, WI 53050), and on the official Scag Power Equipment website (www.scag.com). When requesting a replacement manual, please indicate the complete model number and serial number listed on your Scag Power Equipment product.

If additional information or service is needed for your machine, please contact your Authorized Scag Dealer.

1.2 MANUAL CONVENTIONS

DIRECTIONAL REFERENCES

Directional references are used throughout this manual to locate the features of your machine. The "Right," "Left," "Front," and "Rear" of the machine are referenced from the perspective of the operator while standing in the operating position and facing the forward travel direction.

SAFETY ALERTS



The symbol above means, **"Attention! Become alert! Your safety is involved!"** This symbol is used with the following safety alerts to communicate important safety precautions, safe operating practices, and dangerous hazards. Carefully read all safety alerts associated with your machine to avoid injury and possible death. Be sure to understand all potential hazards and causes of injury or death before attempting to operate your machine.

⚠ DANGER

"DANGER" denotes an extremely hazardous situation on or near the machine. If not avoided, this hazard will result in serious injury or death.

⚠ WARNING

"WARNING" denotes a hazardous situation on or near the machine. If not avoided, this hazard could result in serious injury or death.

⚠ CAUTION

"CAUTION" denotes a hazardous situation on or near the machine. If not avoided, this hazard may result in minor to moderate injury.

1.3 SERVICING YOUR MACHINE

AUTHORIZED SCAG DEALERS

We encourage you to contact your Authorized Scag Dealer for any repairs to your machine. All Scag Power Equipment dealers are informed of the latest methods to service your equipment and carry a full line of Scag replacement parts. Their services are efficient, both in the field and at their service shops.

When ordering replacement parts for your machine, always provide the complete model number and serial number listed on your machine. The serial number plate is located on the frame of the machine near the engine and the hydraulic pump. See Figure 1-1.

IMPORTANT

The use of parts other than Scag replacement parts will void the warranty on your machine. Unauthorized replacement parts may adversely affect the performance, durability, or safety of your machine.

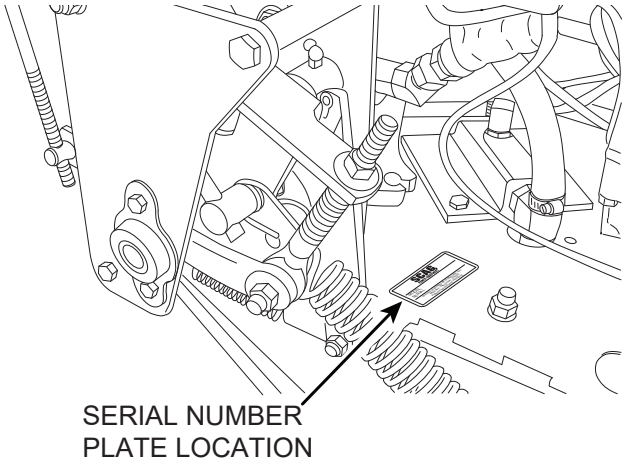

Figure 1-1. Serial Number Plate Location

ENGINE AND DRIVETRAIN COMPONENTS

The detailed servicing and repair procedures for the engine and drivetrain of your machine are not covered in this manual. For service of these components during the limited warranty period, please contact your Authorized Scag Dealer or locate an authorized servicing agent of the component manufacturer. **Any unauthorized work completed on these components during the limited warranty period may void your warranty.**

ATTACHMENTS AND ACCESSORIES

Attachments and accessories manufactured by companies other than Scag Power Equipment or Metalcraft of Mayville must be approved for use on your machine by Scag Power Equipment. Any alterations or modifications made to your machine that change the performance, durability, or allow the use of unapproved attachments and accessories will not be covered by the limited warranty. See Section 8 for more information.

1.4 SYMBOLS

SYMBOL	DESCRIPTION	SYMBOL	DESCRIPTION
	Read Operator's Manual		CE Mark
	Parking Brake	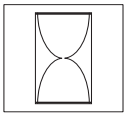	Hour Meter / Elapsed Operating Hours
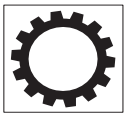	Transmission	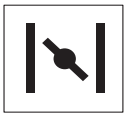	Choke
	Continuously Variable – Linear		Oil
	ON / START		OFF / STOP
	Fast	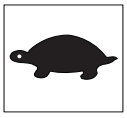	Slow
	Spring Tension on Idler		Cutting Element – Basic Symbol
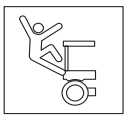	Falling Hazard	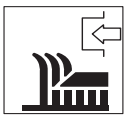	Cutting Element – Engage
	Pinch Point	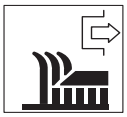	Cutting Element – Disengage
	Thrown Object Hazard		Keep Bystanders Away
	Crush Hazard		Spinning Blade Hazard

SAFETY INFORMATION

2.1 INTRODUCTION

Your Scag mower is only as safe as the operator. Hazard control and accident prevention are dependent upon the awareness, prudence, and proper training of the personnel involved in the operation, maintenance, transportation, and storage of your machine.

Ensure every operator is properly trained and thoroughly familiar with all controls, operating practices, and safety precautions before operating your machine. The owner and operator can prevent, and will be responsible for, accidents or injuries occurring to themselves, other people, or property.

NOTE

Ensure all personnel involved in the operation of your machine know where this manual is stored. Keep a record of each employee that has read this manual.

Scan the QR code below with your mobile device to access the "Safe Operations Videos" web page on the official Scag Power Equipment website. Carefully watch all relevant safety videos before attempting to operate your machine.

Figure 2-1. Safety Video QR Code

2.2 BEFORE OPERATION SAFETY

GENERAL CONSIDERATIONS

1. Clear the operating area of all objects that could interfere with the operation of the machine. These objects may be picked up and thrown by the cutter blades when mowing if not removed.
2. Ensure all operators and mechanics working with the machine are appropriately trained and understand the procedures outlined in this manual. The owner of the machine is responsible for training all operators working with their machine.
3. Do not operate the machine when children or bystanders are present. Turn off the machine if any children or bystanders enter the operating area.
4. Never allow children or untrained personnel to operate the machine.
5. Do not carry passengers on the machine.
6. Wear adequate protective equipment while operating the machine. Avoid loose clothing, jewelry, or long hair that could get tangled in moving parts. Wearing safety glasses, slip-resistant safety shoes, and a helmet is advisable and required by some local ordinances and insurance regulations.

⚠ WARNING

Prolonged periods of exposure while operating this machine may cause hearing loss. Always wear hearing protection while operating the machine.

7. Keep the machine in a good operating condition. Keep all shields, safety devices, and decals in place. If a shield, safety device, or decal is damaged or defective, repair or replace the component before operating the machine.
8. Before operating the machine with an attachment or accessory, ensure that the component is properly installed and approved by Scag Power Equipment.
9. Do not operate the machine without the side discharge chute installed and in the down position. Ensure any optional grass catcher or mulch plate is completely installed before operating the machine.
10. Check the cutter blade mounting bolts for proper tightness at frequent intervals.
11. Ensure all safety interlock switches are functioning correctly before operating the machine.
12. All equipment must comply with state and local ordinances as well as the latest SAE J137 or ANSI/ASAE S279 requirements if the machine is driven on public roads. Contact your local authorities for regulations and equipment requirements.

PROTECTING CHILDREN

Children are attracted to lawn mowing machines and mowing activities. Many associate mowing machines with fun because someone has allowed them to play with a machine in the past. Death or serious injury may occur if the operator is not alert to the presence of children.

1. Keep children out of the operating area and in the care of a responsible adult. Be aware of any children near the operating area.
2. Do not assume that children will stay where you last saw them. Turn off the machine if children enter the operating area.
3. Never allow children to operate the machine, even if the cutter deck is disengaged. Children do not understand safe operating procedures and risk serious injury if control of the machine is lost.
4. Children do not understand the dangers of rotating blades, nor do they understand that the operator is unaware of their presence. Children who have played with a machine in the past may suddenly appear in the operating area and be run over or backed over by the machine.
5. Tragic accidents can occur if the operator is not alert to the presence of children, especially when children approach the machine from behind. Disengage the cutter deck and look down and behind the machine before mowing in reverse.

FUEL & FLUID SAFETY

1. Fuel is flammable and fuel vapors are explosive; handle it with extreme care.
2. Keep all flammable ignition sources (cigarettes, matches, etc.) away from the machine and any fuel containers. Never store fuel near open flames, heat sources, or sparks.
3. Never fuel indoors or inside enclosed spaces. Move the machine outside for adequate ventilation.
4. Store fuel only in portable, non-metal containers approved by the Underwriter's Laboratory (U.L.) or the American Society for Testing & Materials (ASTM).
5. Place containers on the ground to prevent fires and explosions caused by static electric discharge. Fuel vapors can be ignited by static electric discharge in ungrounded containers.
6. Do not fill fuel containers on a truck or trailer bed with a plastic liner. Always place containers on the ground away from vehicles before filling.
7. Always use a funnel or spout to prevent oil and fuel spillage. If fuel is spilled, do not start the machine or create any source of ignition until the fuel has been cleaned and the vapors have evaporated.
8. Clean any oil and fuel spillage before operating the machine. Remove all oil- and fuel-soaked debris.

⚠ CAUTION

Areas affected by fuel spills may suffer from irritation, chemical burns, and contact dermatitis. If fuel is spilled on clothing, change the clothing immediately and wash any affected skin.

9. Never remove the fuel tank cap or add fuel while the machine is running. Allow the engine to cool before adding fuel.
10. Do not operate the machine without the exhaust system installed and working properly.

⚠ DANGER

Exhaust fumes are hazardous and contain carbon monoxide, which can cause brain injury and death. Do not run the machine indoors or inside confined areas without proper ventilation.

11. Ensure all hydraulic fluid connections are tight and that all hydraulic hoses and lines are in a good operating condition before starting the machine.

SAFETY INTERLOCK SYSTEM

⚠ WARNING

This machine is equipped with a safety interlock system intended to protect the operator and others from injury.

This is accomplished by preventing the engine from starting unless the deck drive is disengaged and the transmission is in neutral.

The safety interlock system will shut off the engine if the operator releases the operator presence levers with the deck drive or the transmission engaged.

Never operate the machine with the interlock system disconnected, bypassed, or malfunctioning.

The safety interlock system should be tested before each use of the machine. If the safety interlock system does not operate as described in the following procedure, contact your local Authorized Scag Dealer immediately to have the system repaired. Do not operate the machine until the safety interlock system has been repaired.

1. Place the steering control levers in the neutral lock position, place the speed control lever in the neutral position, engage the parking brake, and engage the PTO switch to the ON (up) position. Stand in the operating position for electric start models. Try to start the engine; the engine should not start.
2. Place the steering control levers in the neutral lock position, move the speed control lever out of the neutral lock position, engage the parking brake, move the PTO switch to the OFF (down) position, Stand in the operating position for electric start models. Try to start the engine; the engine should not start.
3. Place the steering control levers in the neutral lock position, place the speed control lever in the neutral position, engage the parking brake, move the PTO switch to the OFF (down) position. Stand in the operating position for electric start models. Start the engine. With the engine running, engage the PTO switch to the ON (up) position, and remove your hands from the operator presence controls on the handle bars. The engine should shut off.
4. Place the steering control levers in the neutral lock position, place the speed control lever in the neutral position, engage the parking brake, move the PTO switch to the OFF (down) position. Stand in the operating position for electric start models. Start the engine. With the engine running, release the parking brake, and remove your hands from the operator presence controls on the handle bars. The engine should shut off.
5. Place the steering control levers in the neutral lock position, place the speed control lever in the neutral position, engage the parking brake, move the PTO switch to the OFF (down) position. Stand in the operating position for electric start models. Start the engine. With the engine running, move speed control lever out of neutral, and remove your hands from the operator presence controls on the handle bars. The engine should shut off.

POWER TAKE-OFF (PTO) SYSTEM

The PTO system should be tested before each use of the machine. If the PTO system does not operate as described in the following procedure, contact your local Authorized Scag Dealer immediately to have the PTO system repaired. Do not operate the machine until the PTO system has been repaired.

1. Stand in the operating position, engage the parking brake, place the neutral latches in the neutral lock position, move the speed control lever to the neutral position, and start the engine.
2. Set the throttle at three-quarters (3/4) speed.
3. Engage the cutter deck by pulling the yellow PTO switch, located on the instrument panel, up. See Figure 2-2 for more information.

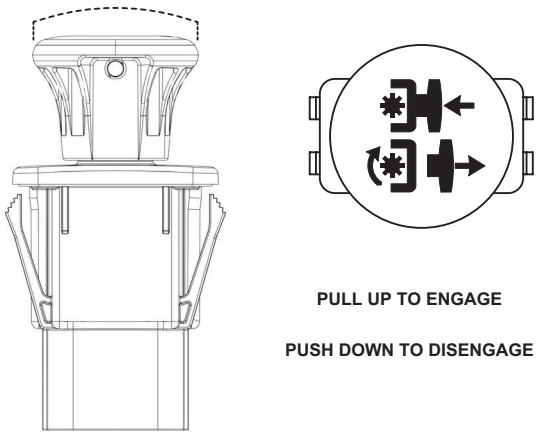

Figure 2-2. PTO Switch Function

4. Confirm that the cutter deck drive belt is engaged and turning the cutter deck spindles.
5. Disengage the cutter deck by pushing the yellow PTO switch down.
6. Confirm that all movement in the cutter deck drive belt has stopped.

2.3 DURING OPERATION SAFETY

GENERAL CONSIDERATIONS

⚠ DANGER

This machine is capable of throwing objects and amputating hands and feet. Failure to follow these instructions may result in serious injury or death.

⚠ WARNING

Extended operation of this machine exposes the operator to whole-body and hand-arm vibrations.

Prolonged exposure to these vibrations may cause discomfort, numbness, tingling, fatigue, back pain, and reduced hand dexterity. Long-term exposure may lead to permanent circulatory issues, nerve damage, carpal tunnel syndrome, and musculoskeletal injury.

Reduce vibration exposure by limiting operation time and taking regular breaks.

1. Understand the function of all controls and how to stop the machine quickly before use.
2. Avoid all distractions while operating the machine. Do not operate the machine while sick, tired, or under the influence of alcohol or drugs.
3. Only operate the machine in daylight, artificial light, and appropriate weather conditions. Do not operate the machine during lightning, thunderstorms, or other inclement weather.
4. Do not mow wet grass. Wet grass reduces traction and steering control of the machine.
5. Start the engine with the neutral latches placed in the neutral lock position, the speed control lever in the neutral position, the parking brake engaged, and the PTO switch disengaged.
6. Operate the machine using steady motions. Do not turn sharply. Be aware of your surroundings while backing up. Always yield the right-of-way when crossing roads and sidewalks.
7. Immediately engage the parking brake if steering control is lost during operation. Inspect the machine and correct any problems before continuing to operate.
8. Be aware of obstacles in your work area. Keep away from any trees, walls, and drop-offs. Beware of overhead obstructions (low branches, electrical wires, etc.) and underground obstructions (holes, rocks, roots, pipes, sprinklers, etc.). Stay alert for hidden hazards, and cautiously enter new areas.
9. Stay at least two machine widths away from drop-offs, ditches, retaining walls, and water. Avoid any excessively steep slopes.
10. Never raise the cutter deck with the blades engaged.
11. Disengage power to the cutter deck before traveling in reverse. Do not mow in reverse unless absolutely necessary. If you must mow in reverse, observe the entire area behind the machine before proceeding. Mow slowly and maintain constant awareness of the area behind the machine.
12. Disengage power to the cutter deck before crossing roads, walks, or gravel drives.
13. Never direct the discharge of material towards any bystanders. Turn off the machine if any children or bystanders enter the operating area.
14. Do not direct the discharge of material toward walls, obstacles, or obstructions. Reflected material may injure the operator.
15. If the mower discharge becomes clogged, do not attempt to clear the obstruction while the machine is running. Shut off the engine, remove the key, and wait for all movement to stop before proceeding.

⚠ WARNING

Never use hands to dislodge a clogged discharge chute. Use a stick or other device to remove any obstructions after the engine and cutter blades have stopped moving.

16. The machine and any attachments must be stopped and inspected for damage after striking a foreign object. Repair all damage before restarting and operating the machine.
17. Keep hands, feet, and clothing away from moving parts of the machine while it is running. Do not make adjustments to the machine while it is running.

⚠ CAUTION

Do not touch the engine or the muffler while the engine is running or immediately after stopping the machine. These areas are hot enough to cause burns.

18. Never leave the machine unattended while running. Disengage the PTO switch, lower any attachments, engage the parking brake, stop the engine, and remove the key.
19. Disengage power to any attachments when not in use or while transporting the machine.
20. If you are uneasy while operating the machine due to uncertainty of the terrain, stop immediately.

SLOPE OPERATION

Slopes are a major cause of instability, loss-of-control, and tip-over accidents, which may result in severe injury or death. Before operating the machine on any slope, review the safety guidelines and instructions listed in this manual. The owner and operator will be responsible for the safe operation of this machine on slopes.

1. Use extreme caution when operating the machine on any slope or uneven surface.
2. Be aware of obstacles at the base of and on the slope. Do not operate the machine near drop-offs, ditches, embankments, or bodies of water. Remove any hazards before operation, or keep at least two cutting widths between the machine and the hazard.
3. Mark uneven terrain (holes, bumps, roots, rocks, ruts, soft turf, etc.) before operation. Uneven terrain may cause instability and overturn the machine.
4. Travel across the slope whenever possible. Do not travel up or down the slope.
5. Reduce speed and use extreme caution on slopes to prevent instability, loss of control, and tipping. Be especially cautious when changing directions on slopes.
6. Avoid starting and stopping on slopes. Keep all movements on slopes slow and gradual. If the machine loses traction, disengage power to the cutter deck and proceed slowly down the slope.
7. Do not operate the machine in conditions with questionable traction, steering, or stability. Do not mow wet grass, as the reduced traction may cause sliding and a loss of braking and steering.
8. Never park the machine on slopes or uneven terrain.

2.4 AFTER OPERATION SAFETY

GENERAL CONSIDERATIONS

1. Disengage the PTO switch, move the speed control lever to the neutral position, engage the parking brake, place the neutral latches in the neutral lock position, stop the engine, and remove the key before cleaning, adjusting, or repairing the machine. Wait for all movement to stop before proceeding.

IMPORTANT

Disconnect the spark plug wire before servicing or adjusting the machine to further prevent accidental starting of the engine.

2. Never make adjustments to the machine while the engine is running unless specifically instructed to do so. Keep hands, feet, and clothing away from the moving parts of the machine.
3. Do not touch parts that may be hot from operating the machine. Allow all hot parts to cool before maintaining, adjusting, or servicing the machine.
4. Clean dirt, grass, leaves, excessive grease, and oil from cutter decks, drives, muffler, and engine after use to reduce fire hazards.
5. Store the keys to the machine in a safe location when the machine is not in use. This location must be inaccessible to children.

MAINTENANCE SAFETY

1. Always park the machine on a level surface and engage the parking brake.
2. Disconnect the battery before repairing the machine. Disconnect the negative terminal first and the positive terminal last. Reconnect the positive terminal first and the negative terminal last when reinstalling the battery.

3. Never allow untrained personnel to service the machine. Ensure all mechanics working with the machine are appropriately trained and understand the procedures outlined in this manual.
4. Keep all nuts, bolts, and screws tight to ensure the machine is in a safe working condition. Check blade mounting bolts frequently to ensure they are tight.
5. Keep all parts in a good working condition. Replace all worn, damaged, or defective decals.
6. Be cautious when checking blades. Use a Blade Buddy (P# 9212), wrap the blade(s), or wear gloves when servicing blades.
7. Always replace damaged blades. Never straighten or weld damaged blades.
8. Do not change the engine governor settings or overspeed the engine. See the Engine Owner's Manual for information on engine settings.
9. Use jack stands rated for the weight of the machine to support components when required.
10. Carefully release pressure from any components with stored energy.

⚠ WARNING

Hydraulic fluid is under high pressure and can cause serious injury by penetrating skin.

Before performing maintenance on the hydraulic system, relieve all hydraulic pressure by placing the control levers in the neutral lock position and stopping the engine.

11. Never use hands to check for hydraulic leaks. Use paper or cardboard to search for leaks.

⚠ WARNING

Keep body and hands away from pinholes or nozzles that eject high-pressure hydraulic fluid. If hydraulic fluid is injected into the skin, it must be surgically removed by a doctor within a few hours, or gangrene may result. If your hydraulic system needs service, please see your Authorized Scag Dealer.

STORAGE & TRANSPORTATION SAFETY

1. Allow the engine to cool before storing the machine.
2. Shut off the fuel system while storing or transporting the machine.
3. Store the machine in a clean garage or storage area. Do not store the machine near open flames, sparks, fuel containers, or other hazards.
4. Service the machine before storing over long periods of time. Check all nuts, bolts, and screws to ensure the machine is in a safe working condition. Change the air cleaner, engine oil, and apply grease.
5. Cover the machine to protect it while storing over long periods of time.
6. Charge the battery in an open, well-ventilated area. Keep away from sparks and open flames. Unplug the charger before connecting or disconnecting from the battery. Always wear protective clothing and use insulated tools while working with the battery.
7. Transport the machine using a heavy-duty trailer or truck with a load rating greater than the weight of the machine. Ensure the trailer or truck complies with all legal requirements for lighting and markings. Refer to local ordinances for specific trailer and tie-down requirements before use.
8. Only use a full-width ramp to transport the machine.
9. Use caution when loading or unloading the machine onto a truck or trailer. Always load and unload with the heavy end of the machine facing up the ramp.
10. When transporting the machine, ensure the speed control lever is in the neutral position, the neutral latches are in the neutral lock position, the parking brake is engaged, and the engine is off with the key removed. Block the tires before transporting.
11. Tie the machine down securely using straps, chains, or cables. Both the front and rear straps must be directed down and outward from the machine. Refer to local ordinances for tie-down requirements before use.

2.5 SPARK IGNITION SYSTEM

The spark ignition system equipped on this machine complies with Canadian ICES-002.

2.6 USE OF A SPARK ARRESTOR

The engine on this machine is not equipped with a spark arrestor muffler. It is in violation of California Public Resource Code, Section 4442, to operate the machine on or near any forest-covered, brush-covered, or grass-covered land unless the exhaust system is equipped with a spark arrestor that meets any applicable local and state laws. Other states and federal areas may have similar laws. Check with your local and state authorities for regulations pertaining to these requirements.

2.7 SAFETY AND INSTRUCTIONAL DECAL DETAILS



483405



487212



483406

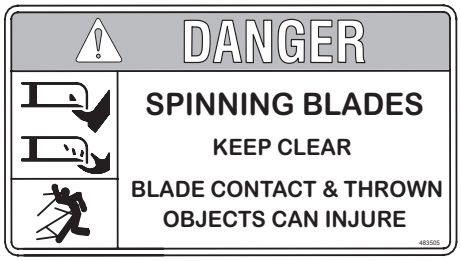

483505



483900
(supplied with California models only)

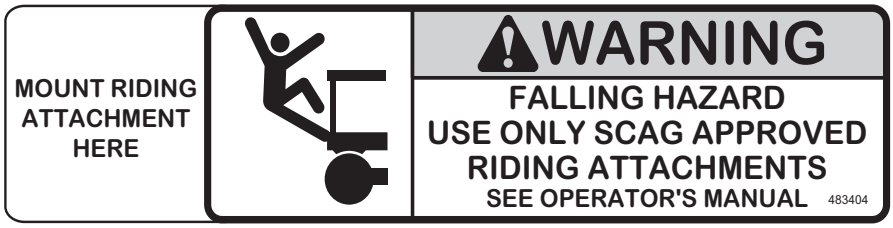

483404

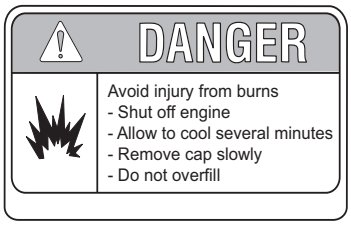

Molded in Fuel Tank
485667 Replacement

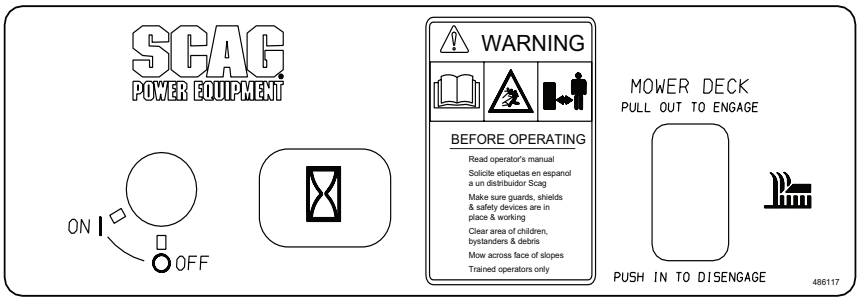

486117

SPECIFICATIONS

3.1 ENGINE

General Type ..... Heavy Duty Industrial/Commercial Gasoline
Engine Model:
- Kawasaki 14FS FS481V-FS18
- Kawasaki 14FSE FS481V-SXXR
- Kawasaki 15FSE FS541V-AS41R
- Kawasaki 18FSE FS600V-T12-R
- Kawasaki 22FSE FS651V-DS10

Displacement:
- Kawasaki 14FS, 14FSE, 15FSE 603cc
- Kawasaki 18FSE 603cc
- Kawasaki 22FSE 726cc

Idle Speed:
- Kawasaki ..... 1550 RPM (+/- 150 RPM)

Full Speed:
- Kawasaki ..... 3600 RPM (+/- 150 RPM)

Fuel ..... Non-Leaded Gasoline with a Minimum Octane Rating of 87

3.2 ELECTRICAL

Starter ..... Electrical Ignition with Recoil Starter
Interlock Switches ..... Operator Presence, Mower Engagement (PTO), Transmission Neutral
Instrument Panel ..... Key Switch, Throttle Lever, PTO Switch

3.3 DRIVE SYSTEM

Drive System ... Hydraulic Drive with Two Variable Displacement Pumps and Two Cast-Iron High Torque Wheel Motors
- Hydraulic Pumps ..... Two Hydro-Gear model PG Series 10 cc. Hydraulic Pumps with Dump Valves for movement without the engine running
- Hydraulic Drive Motors ..... Two Parker Model TE Series 12 cu. inch Cast-Iron Wheel Motors

Steering/Travel Control ..... Independent Handle Controls for each wheel, squeeze to move from forward to neutral to reverse, neutral lock lever, speed range controlled with single lever (patented design), in-field tracking adjustment with tool provided
Parking Brake ..... 7.5" Drum, Band Brake, one on each wheel
Wheels:
- (2) Front Caster ..... 9 X 3.5 Flat-Free w/Roller Bearings
- (2) Drive - ..... 16 x 6.5-8 Four-Ply Pneumatic Tubeless, Radius Edge

Tire Pressure:
- Front Caster ..... Flat-Free
- Drive ..... 12 PSI

Fuel Tank ..... 5-1/2 Gallon
Travel Speed:
- Forward ..... 0 up to 7.4 MPH
- Reverse ..... 0 up to 3.0 MPH

-NOTE- The machine will travel at 7.4 mph for transport purposes. For best cutting performance the forward travel speed should be adjusted depending upon the cutting conditions.

3.4 CUTTER DECK

Type.....Out-Front design with anti-scalp rollers
Construction ..... 36 / 48 = 7-Gauge Deck Top w/10-Gauge Reinforced Spindle Area, 7-gauge (3/16") Deck Skirt
52 / 61 = 10-Gauge Deck Top w/10-Gauge Reinforced Spindle Area, 7-Gauge (3/16") Deck Skirt
True Cutting Width:
36 .....35.5" (90.2 cm)
48 .....48" (122.0 cm)
52 .....52" (132.0 cm)
61 .....61" (155.0 cm)
Cutting Height Adjustment..... Adjustment from, 1-3/4" to 4-1/4" in 1/4" increments
Cutter Blades..... 0.197 in. Thick, Milled Edge, Wear Resistant
Blade Engagement.....Electric Blade Engagement Clutch with Control Panel Switch Connected to the Cutter Deck through a Belt
Discharge Opening.....Extra Wide Discharge Opening with Spring-Loaded Discharge Chute
Discharge Chute..... Black, Polypropylene (Plastic), Flexible
Spindles..... Cast-Iron Housing, Tapered Roller Bearings with Top Access Grease Fitting and Grease Overfill Relief Poppet
Spindle Pulleys.....Split Steel with Tapered Locking Hub
Cutter Deck Belts.....B-section with Kevlar Cords
Electric Clutch Type.....Ogura Heavy Duty PTO Clutch Brake

3.5 WEIGHTS AND DIMENSIONS

	36A / 48V	52V	61V
Length	72" / 76"	76"	78"
Tracking Width	37" / 37"	37"*	41"
Overall Width w/chute down	47" / 60.5"	64.5"	73.5"
Overall Width w/chute up	37" / 49"	53"	62"
Overall Height	40.5" / 40.5"	40.5"	40.5
Operating Weight	515# / 565#	585#*	717#

3.6 PRODUCTIVITY

	36 / 48	52	61
Cutting Width	36" / 48"	52"	61"
Acres Per Day	9.3 / 12.4	13.5	15.8

The preceding chart will aid you in determining how many acres your Scag mower will cut per day. The chart is an estimate based on 8 hours per day cutting time at 4 MPH with a 20% allowance for overlap and turns.

* Large Frame = Tracking Width - 41", Weight - 605#

OPERATING INSTRUCTIONS

⚠ WARNING

Do not attempt to operate this mower unless you have read this manual. Learn the location and purpose of all controls and instruments before you operate this mower.

4.1 CONTROLS & INSTRUMENT IDENTIFICATION

Before operating the mower, familiarize yourself with all mower and engine controls. Knowing the location, function and operation of these controls is important for safe and efficient operation of the mower.

1. **Ignition Switch (Figure 4-1).** The ignition switch is used to start the engine. Turn the key to the on position before pulling the recoil starter.
2. **Mower Deck Switch (Figure 4-1).** Use to engage and disengage the mower drive system. Pulling up on the switch will engage the deck drive. Pushing down on the switch will disengage the deck drive.
3. **Engine Choke Control (Figure 4-1).** Use to start a cold engine.
4. **Engine Throttle Control (Figure 4-1).** Use to control the engine speed. Pushing the lever forward increases engine speed. Pulling the lever back decreases engine speed. Full back position is the IDLE position. Full forward is the cutting position.
5. **Left Steering Control (Figure 4-1).** Use to control the mower's left wheel when traveling forward or reverse. Pull upward for neutral and reverse.
6. **Right Steering Control (Figure 4-1).** Use to control the mower's right wheel when traveling forward or reverse. Pull upward for neutral and reverse.
7. **Hour Meter (Figure 4-1).** Indicates the number of hours the engine has operated. It operates whenever the engine is running. Has preset maintenance reminders for engines and hydraulic system oil changes. Will start flashing scheduled maintenance 2 hours before preset time and continue flashing until 2 hours after. Automatically resets.

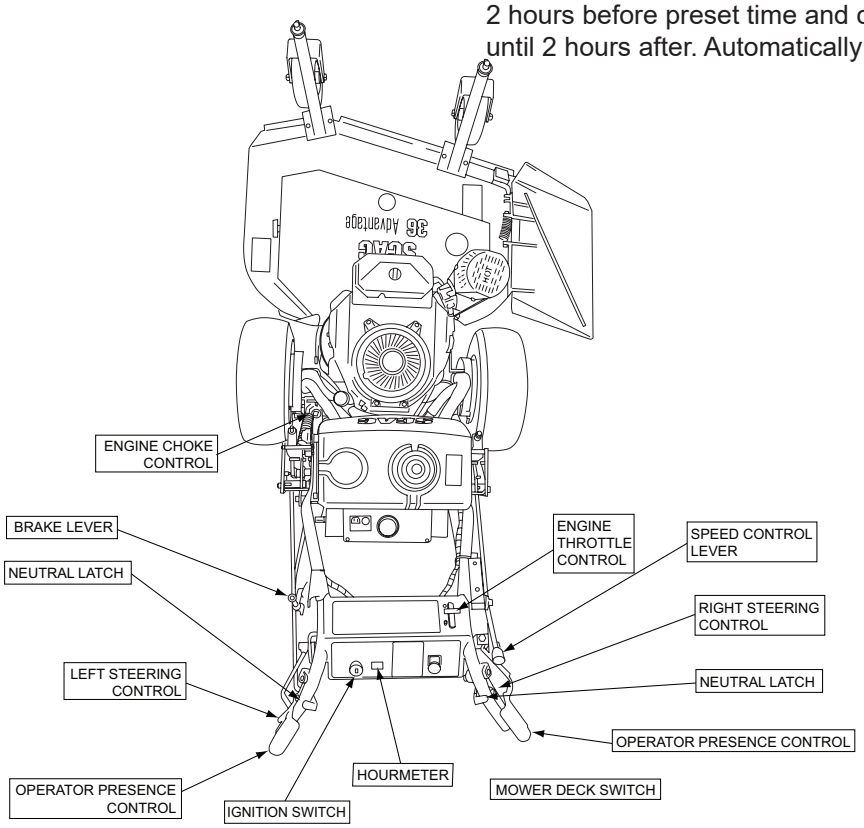

Figure 4-1. Controls and Instruments

8. **Speed Control Lever (Figure 4-1).** Use to select the forward speed.
9. **Neutral Latch (Figure 4-1).** Use to secure the hydraulic drive system in neutral. Apply neutral latches when parking the machine.
10. **Operator Presence Control (Figure 4-1).** The operator presence control levers must be depressed before the speed control lever is shifted out of neutral or engaging the mower deck.
11. **Parking Brake Lever (Figure 4-1).** Use to engage and disengage the parking brake. Pull the lever back to engage the parking brake. Push the lever forward to disengage the parking brake.

4.2 SAFETY INTERLOCK SYSTEM

The mower is equipped with a safety interlock system that shuts off the engine if the operator releases the operator presence levers with the deck drive engaged and/or the speed control lever not in neutral or the parking brake disengaged. Never operate equipment with the interlock system disconnected or malfunctioning.

⚠ WARNING

Never operate the mower with the interlock system disconnected or malfunctioning. Do not disengage or bypass any switch; injury to yourself and others or property damage could result.

4.3 TESTING THE SAFETY INTERLOCK SYSTEM

The safety interlock system should be tested each time before using the machine. If the safety interlock system does not operate as described below, contact your local Authorized Scag Power Equipment Dealer immediately to have the safety interlock system repaired.

1. Place the steering control levers in the neutral lock position, place the speed control lever in the neutral position, engage the parking brake, and engage the PTO switch to the ON (up) position. Stand in the operating position for electric start models. Try to start the engine; the engine should not start.
2. Place the steering control levers in the neutral lock position, move the speed control lever out of the neutral lock position, engage the parking brake, move the PTO switch to the OFF (down) position, Stand in the operating position for electric start models. Try to start the engine; the engine should not start.
3. Place the steering control levers in the neutral lock position, place the speed control lever in the neutral position, engage the parking brake, move the PTO switch to the OFF (down) position. Stand in the operating position for electric start models. Start the engine. With the engine running, engage the PTO switch to the ON (up) position, and remove your hands from the operator presence controls on the handle bars. The engine should shut off.
4. Place the steering control levers in the neutral lock position, place the speed control lever in the neutral position, engage the parking brake, move the PTO switch to the OFF (down) position. Stand in the operating position for electric start models. Start the engine. With the engine running, release the parking brake, and remove your hands from the operator presence controls on the handle bars. The engine should shut off.
5. Place the steering control levers in the neutral lock position, place the speed control lever in the neutral position, engage the parking brake, move the PTO switch to the OFF (down) position. Stand in the operating position for electric start models. Start the engine. With the engine running, move speed control lever out of neutral, and remove your hands from the operator presence controls on the handle bars. The engine should shut off.

4.4 INITIAL RUN-IN PROCEDURES

FIRST DAY OF USE OR APPROXIMATELY 20 HOURS

1. Check all belts for proper alignment and wear at 2, 4 and 8 hours.
2. Change the engine oil and oil filter after the first 20 hours of operation. (See Section 7.4.)
3. Check for loose hardware. Tighten as needed.
4. Check interlock system for proper operation. (See Section 4.2.)
5. Check tire pressure. Adjust pressure if necessary. (See Section 7.9.)

4.5 STARTING THE ENGINE

⚠ CAUTION

DO NOT USE STARTING FLUIDS. Use of starting fluids in the air intake system may be potentially explosive or cause a "runaway" engine condition that could result in engine damage and/or personal injury.

1. Be sure the fuel shutoff valve, located by the fuel tank, is completely open. (See Section 7.5.)
2. Apply the neutral latch levers.
3. Shift the speed control lever into neutral.
4. Place the PTO switch in the disengaged position.
5. Apply the parking brake.
6. If the engine is cold, choke the engine as needed.
7. Move the engine throttle control to about half engine speed.
8. Turn the ignition key to the ON position.
9. Pull the recoil starter on the engine.
10. Allow engine to warm before operating the mower.

4.6 GROUND TRAVEL AND STEERING

- IMPORTANT -

If you are not familiar with the operation of a walk behind mower with a hydrostatic transmission, the steering and ground speed operations should be learned and practiced in an open area, away from buildings, fences, or obstructions.

Learn the operation on flat ground before operating on slopes.

Start practicing with a slow engine speed and slow forward travel.

Learn to feather the steering controls to obtain a smooth operating action.

Practice operating the mower until you are comfortable with the controls before proceeding to mow.

FORWARD TRAVEL

To travel forward with the mower, release the parking brake, select the desired speed using the speed control lever, pull steering control levers upward, release the neutral latch for both sides and slowly release both the left and right steering control levers. The higher the notch selected using the speed control lever, the faster the machine will travel.

To stop the forward travel, pull upward on the steering control levers, lock the neutral latches, shift the speed control lever into neutral and apply the parking brake.

To steer the mower left while traveling forward, pull upward on the left steering control lever. The further the lever is pulled upward, the quicker the mower will turn left.

To steer the mower right while traveling forward, pull upward on the right steering control lever. The further the lever is pulled upward, the quicker the mower will turn right.

- NOTE -

Smooth operation of the steering control levers will produce smooth mower operation. While learning the operation of the steering controls, keep the travel speed low.

REVERSE TRAVEL

⚠ CAUTION

Disengage power to the mower before backing up. Do not mow in reverse unless absolutely necessary and then only after observation of the entire area behind the mower.

⚠ CAUTION

Before backing up, observe the rear for persons and obstructions. Clear the area before backing up. Possible injury or property damage could occur.

To travel in reverse, pull steering control levers upward. Keep the travel speed low while traveling in reverse.

- NOTE -

The mower may not travel straight in reverse.

To steer left while traveling in reverse, pull upward on the right steering control lever. The further the lever is pulled upward, the quicker the mower will turn left.

To steer right while traveling in reverse, pull upward on the left steering control lever. The further the lever is pulled upward, the quicker the mower will turn right.

4.7 ENGAGING THE DECK DRIVE (CUTTER BLADES)

1. Set the throttle at about 3/4 speed. Do not attempt to engage the deck drive at high speed as this shortens the electric clutch life — use only moderate engine speed when engaging the deck drive.
2. Engage the deck drive by pulling out on the yellow switch, located on the instrument panel, to the engage position. See Figure 4-2.

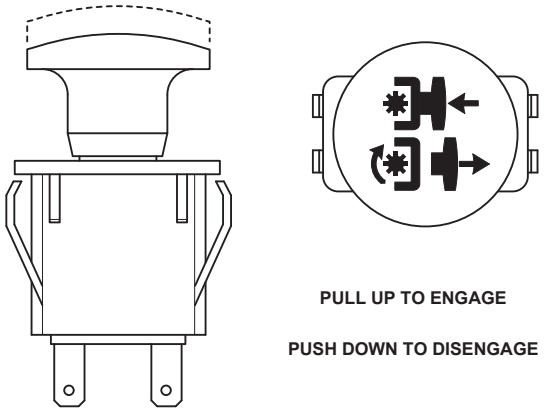

Figure 4-2. Cutter Engage Switch

- NOTE -

A squealing noise may be heard when engaging or disengaging the deck drive. It is caused by the electric clutch plates meshing as the mower comes up to speed. This is normal.

3. To disengage the deck drive, push the switch in to the disengage position.
4. Always operate the engine at full throttle to properly maintain cutting speed. If the engine starts to lug down, reduce the forward speed and allow the engine to operate at maximum RPM.

4.8 HILLSIDE OPERATION

⚠ WARNING

DO NOT operate on steep slopes. ALWAYS FOLLOW OSHA APPROVED OPERATION.

1. This mower has been designed for good traction and stability under normal mowing conditions. However, caution must be used when traveling on slopes, especially when the grass is wet. Wet grass reduces traction and steering control.
2. To prevent tipping or loss of control, do not start or stop suddenly, avoid unnecessary turns and travel at reduced speed. If tires lose traction, disengage blades and proceed slowly off the slope.
3. Avoid sudden starts when mowing on slopes.
4. Travel across the slope whenever possible. Never up and down the slope.
5. Keep tires properly inflated. (See Section 7.9.)

4.9 PARKING THE MOWER

1. Park the machine on a flat, level surface only. Do not park the machine on an incline.
2. Disengage the cutter blades.
3. Shift the speed control lever into the neutral position, lock the neutral latches and apply the parking brake.
4. Slow the engine to idle speed.
5. Turn the ignition key to the OFF position and remove the key.

4.10 AFTER OPERATION

1. Wash the entire mower after each use. Do not use high pressure spray or direct the spray onto electrical components.

- IMPORTANT -

Do not wash a hot or running engine. Cold water will damage the engine. Use compressed air to clean the engine if it is hot.

2. Keep the entire mower clean to inhibit serious heat damage to the engine or hydraulic oil circuit.
3. Check the drive belts for proper alignment and any signs of wear. Correct and adjust if necessary.

⚠ DANGER

To avoid injury from burns, allow the mower to cool before removing the fuel tank cap and refueling.

4. After the mower has cooled down, fill the fuel tank with fresh, clean fuel at the end of every day of operation. See Engine Owner's Manual for proper octane requirements.
5. Check the tire pressure. Adjust pressure if necessary. (See Section 7.9.)

4.11 REMOVING CLOGGED MATERIAL

⚠ DANGER

ROTATING BLADES

NEVER PUT YOUR HANDS INTO THE DISCHARGE CHUTE FOR ANY REASON!

Shut off the engine and remove the key and only then use a stick or similar object to remove material if clogging has occurred.

1. If the discharge chute becomes clogged, shut off the engine and remove the ignition key. Using a stick or similar item, dislodge the clogged material. Then resume normal mowing.

4.12 MOVING MOWER WITH ENGINE STOPPED

To “free-wheel” or move the mower around without the engine running, turn the dump valve levers located on the back of the pumps counter clockwise to the "freewheel" position and move the mower by hand. To operate the mower, the dump valves must be turned clockwise to the closed position. See Figure 4.3.

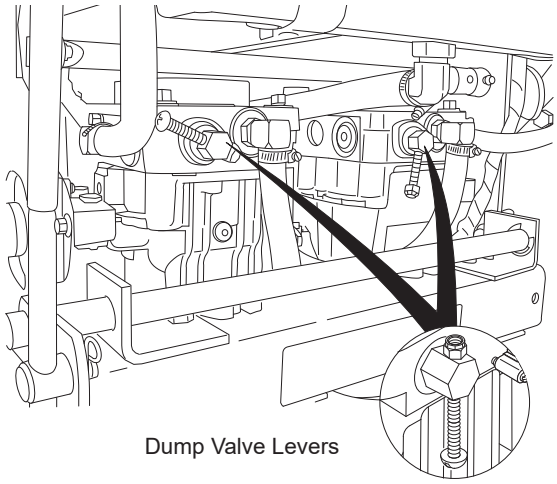

Figure 4-3. Dump Valves

4.13 RECOMMENDATIONS FOR MOWING

1. Do not mow with dull blades. A dull blade will tear grass, resulting in poor lawn appearance and reduced mowing power.

⚠ WARNING

DO NOT operate without Discharge Chute, Mulching Kit, or entire Grass Catcher properly installed.

2. The discharge chute must not be removed and must be kept in the lowest position to deflect grass clippings and thrown objects downward. Direct the side discharge away from sidewalks or streets to minimize cleanup of clippings. When mowing close to obstacles, direct the discharge away from the obstacles to reduce the chance of property damage by thrown objects.

3. Cut grass when it is dry and not too tall. Do not cut grass too short (cut off 1/3 or less of existing grass for best appearance). Mow frequently.
4. Keep mower and discharge chute clean.
5. When mowing wet or tall grass, mow the grass twice. Raise the mower to the highest setting for the first pass and then make a second pass to the desired height.
6. Use a slow travel speed for trimming purposes.
7. Operate the engine at full throttle for best cutting. Mowing with a lower RPM causes the mower to tear the grass. The engine is designed to be operated at full speed.
8. Use the alternate stripe pattern for best lawn appearance. Vary the direction of the stripe each time the grass is mowed to avoid wear patterns in the grass.

TROUBLESHOOTING CUTTING CONDITIONS

CONDITION	CAUSE	CURE
STRINGERS - OCCASIONAL BLADES OF UNCUT GRASS 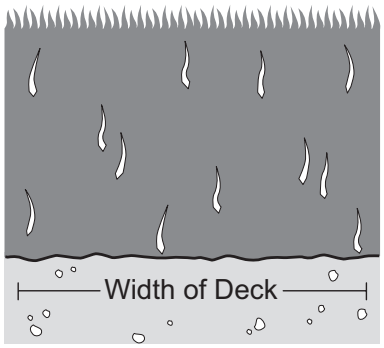	Low engine RPM	Run engine at full RPM
	Ground speed too fast	Slow speed to adjust for conditions
	Wet grass	Cut grass after it has dried out
	Dull blades, incorrect sharpening	Sharpen blades
	Deck plugged, grass accumulation	Clean underside of deck
	Belts slipping	Adjust belt tension
STREAKING - STRIPS OF UNCUT GRASS IN CUTTING PATH 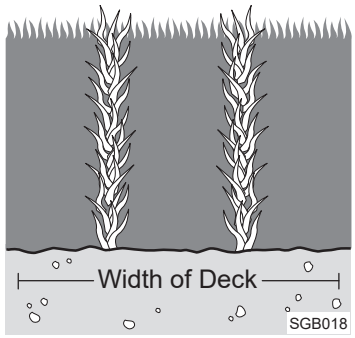	Dull, worn blades	Sharpen blades
	Incorrect blade sharpening	Sharpen blades
	Low engine RPM	Run engine at full RPM
	Belt slipping	Adjust belt tension
	Deck plugged, grass accumulation	Clean underside of deck
	Ground speed too fast	Slow speed to adjust for conditions
	Wet grass	Cut grass after it has dried out
	Bent blades	Replace blades
STREAKING - STRIPS OF UNCUT GRASS BETWEEN CUTTING PATHS 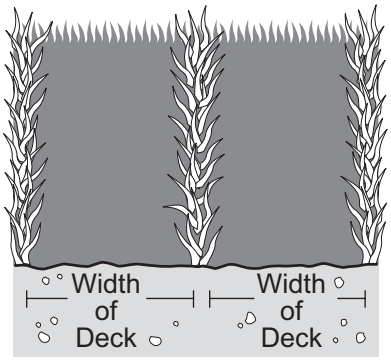	Not enough overlapping between rows	Increase the overlap of each pass

TROUBLESHOOTING CUTTING CONDITIONS (CONT'D)

CONDITION	CAUSE	CURE
UNEVEN CUT ON FLAT GROUND - WAVY HIGH-LOW APPEARANCE, SCALLOPED CUT, OR ROUGH CONTOUR 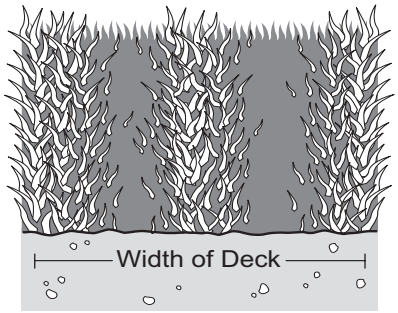	Lift worn from blade	Replace blade
	Blade upside down	Mount with cutting edge toward ground
	Deck plugged, grass accumulation	Clean underside of deck
	Too much blade angle (deck pitch)	Adjust pitch and level
	Deck mounted improperly	See your authorized SCAG dealer
	Bent spindle area	See your authorized SCAG dealer
	Dull blade	Sharpen blade
UNEVEN CUT ON UNEVEN GROUND - WAVY APPEARANCE, HIGH-LOW SCALLOPED CUT, OR ROUGH CONTOUR 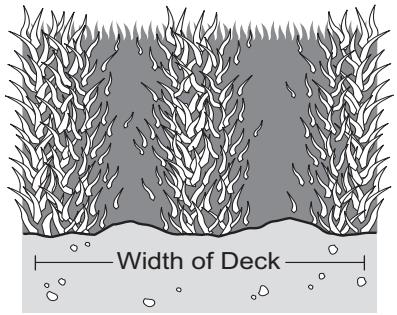	Uneven ground	May need to reduce ground speed, raise cutting height, and/or change direction of cut
SLOPING RIDGE ACROSS WIDTH OF CUTTING PATH 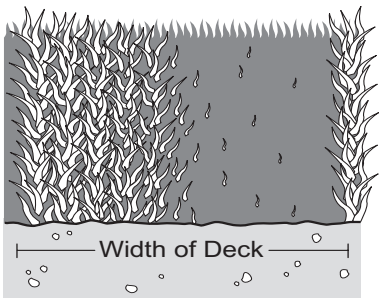	Tire pressures not equal	Check and adjust tire pressure
	Wheels uneven	Check and adjust tire pressure
	Deck mounted incorrectly	See your authorized SCAG dealer
	Deck not level side-to side	Check for level and correct

TROUBLESHOOTING CUTTING CONDITIONS (CONT'D)

CONDITION	CAUSE	CURE
SCALPING - BLADES HITTING DIRT OR CUTTING VERY CLOSE TO THE GROUND 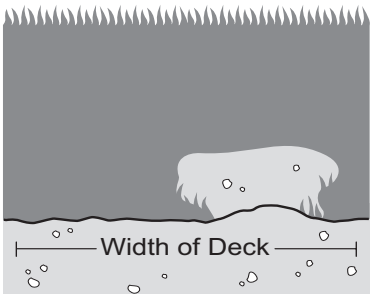	Low tire pressures	Check and adjust pressures
	Ground speed too fast	Slow speed to adjust for conditions
	Cutting too low	May need to reduce ground speed, raise cutting height, change direction of cut, and/or change pitch and level
	Rough terrain	May need to reduce ground speed, raise cutting height, and/or change direction of cut
	Wet grass	Cut grass after it has dried out
STEP CUT - RIDGE IN CENTER OF CUTTING PATH 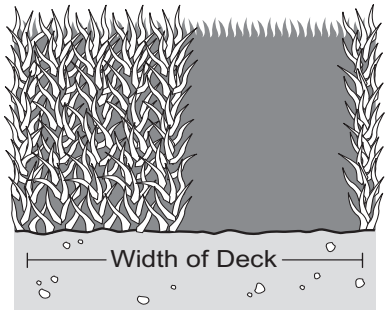	Blades not mounted evenly	Adjust pitch and level
	Bent blade	Replace blade
	Internal spindle failure	See your authorized SCAG dealer
	Mounting of spindle incorrect	See your authorized SCAG dealer
SLOPE CUT - SLOPING RIDGES ACROSS WIDTH OF CUTTING PATH 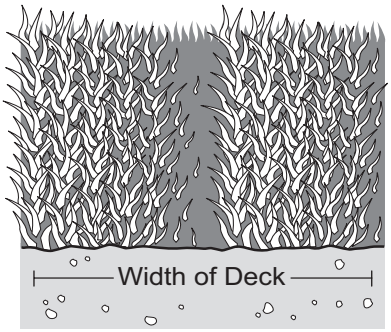	Bent spindle mounting area	See your authorized SCAG dealer
	Internal spindle failure	See your authorized SCAG dealer
	Bent deck housing	See your authorized SCAG dealer

ADJUSTMENTS

6.1 PARKING BRAKE ADJUSTMENT

• Adjust the parking brake so that when the brake hand lever is against the stop on the handle bar, the brake levers on the brake shaft weldment are against the stops on the engine deck.

⚠ CAUTION

Adjust the brake only enough to hold the machine. Excessive force may cause damage to the machine or brake components.

1. Adjust the brake actuator rod on either side of the machine to obtain proper brake adjustment.

6.2 NEUTRAL ADJUSTMENT

-NOTE-

Neutral has been set by your Authorized Scag Power Equipment Dealer at the time of set up and normally does not need to be adjusted. If, however, you find that the neutral has come out of adjustment, follow the procedure below.

1. Raise the drive wheels off the ground and block the caster wheels to prevent the machine from moving.
2. Make sure the speed control lever is in neutral, the steering control levers are in the neutral latch position, and the parking brake is on. Start the engine.
3. Release the parking brake and note if the tires are rotating.
4. Start on the left side of the machine, using the adjustment wrench located on the left side of the machine. Rotate the tracking adjustment nut counter clockwise just until the LH wheel starts to creep forward. Make note of the position of the adjustment nut. Repeat on the right side as needed. See Figure 6-1.
5. Turn the adjustment nut clockwise just until the wheel turns rearward. Make note of the position of the adjustment nut. To adjust neutral, split the difference between the two noted positions of the adjustment nut. Repeat on the right side as needed.
6. Place the wrench in the holder on the left side of the machine and turn the engine off.

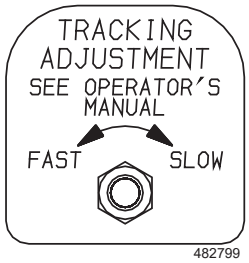

Figure 6-1. Neutral Adjustment

6.3 STEERING CONTROL ROD ADJUSTMENTS

-NOTE-

This adjustment is made to allow the steering control levers to be moved out of the neutral latch without engaging reverse.

Before making this adjustment be sure that the speed control bearing is just touching the speed control cam and that the bell crank bearing is resting in the center groove of the neutral cam.

1. Remove the speed control spring. Remove the steering control rod swivel hair pin. Check the location of the swivel in the slotted hole in the bell crank.
2. Turn the swivel joint on the steering control rods until the swivel joint is centered in the slot in the bell crank.

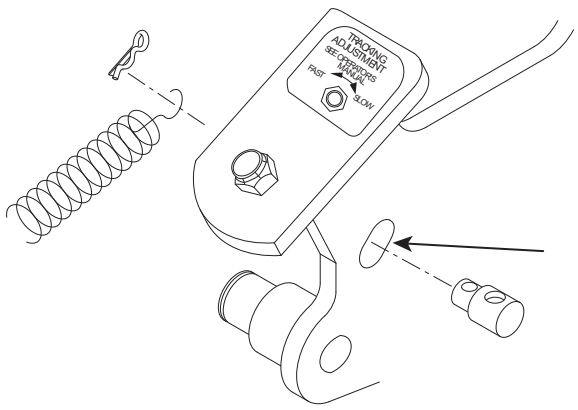

Figure 6-2. Control Rod Adjustment

3. Reinstall the speed control spring onto the swivel. Install the hair pin onto the swivel. See Figure 6-2.

6.4 TRACKING ADJUSTMENT

-NOTE-

Before proceeding with this adjustment, be sure that the tire pressures are correct and the neutral adjustment and the steering control rod adjustment have been completed.

1. With the machine on a flat level surface, start the engine, release the parking brake and place the speed control lever into the speed that will most often be used.
2. Squeeze the steering control levers and release the neutral latch. Slowly release the steering control levers, allowing the machine to move forward.

⚠ WARNING

Before attempting to make any tracking adjustments, move the speed control lever to the neutral position, place the blade engagement switch in the off position, apply the parking brake, and move the steering control levers into the neutral position.

3. If the machine pulls to one side, stop the mower by placing the steering control levers in the neutral position. Using the adjustment wrench located on the left side of the machine, turn the tracking adjustment nut on the slower side counter clockwise until the machine tracks straight.
4. Bring the steering control levers back to the neutral lock position and check to see that the machine does not creep forward on the adjusted wheel.
5. If the machine creeps in neutral, you have moved out of the neutral band and will have to turn the tracking adjustment nut clockwise until the machine does not creep.
6. Repeat steps 1 and 2. If the machine continues to pull to one side, stop the mower by placing the steering control levers in the neutral position. Turn the tracking adjustment nut on the faster side clockwise until the machine tracks straight.
7. If tracking cannot be achieved, contact your Authorized Scag Power Equipment Dealer.

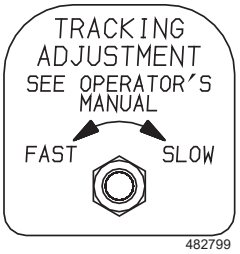

Figure 6-3. Tracking Adjustment

6.5 THROTTLE CONTROL & CHOKE ADJUSTMENTS

These adjustments must be performed by your Scag dealer to ensure proper and efficient running of the engine. Should either need adjustment, contact your authorized Scag service center.

6.6 CUTTER DECK BELT ADJUSTMENTS

⚠ WARNING

Before removing any guards, shut the engine off and remove the ignition key. Wait for all moving parts to come to a complete stop before beginning work.

1. Remove the belt cover.
2. Adjust the cutter deck drive belt using a belt tension gauge. Adjust the belt so that the belt moves 1/2" with 10 pounds of pressure. Adjust the tension by tightening or loosening the J-bolt. See Figure 6-4.

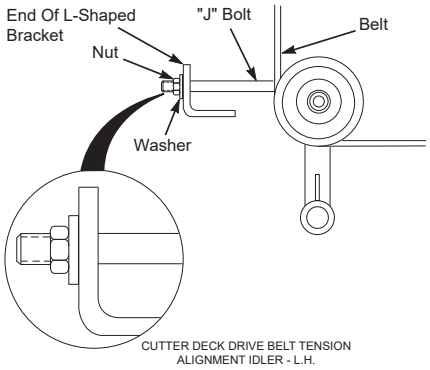

Figure 6-4. Deck Drive Belt Adjustment

-NOTE-

Due to initial belt stretch and to prevent the belt from slipping, check this adjustment after the first 2 hours, 4 hours and 8 hours of operation.

3. Adjust the RH blade drive belt using a belt tension gauge. Adjust the belt so that the belt moves 1/2" with 10 pounds of pressure. Adjust the tension by tightening or loosening the J-bolt. See Figure 6-5 and Figure 6-6.

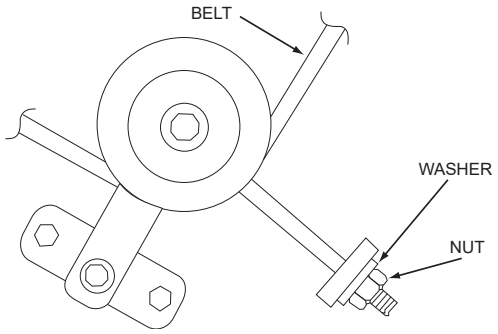

Figure 6-5. Cutter Deck Belt Adjustment R.H.

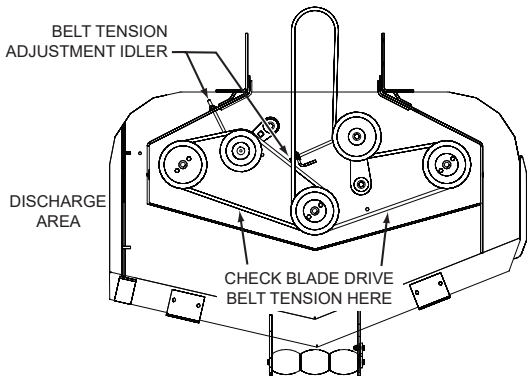

Figure 6-6. Cutter Deck Belt

6.7 BELT ALIGNMENT

Belt alignment is important for proper performance of your Scag mower. If you experience frequent belt wear or breakage, see your authorized Scag service center for belt adjustment.

6.8 ADJUSTING CUTTING HEIGHT

The mower deck can be adjusted from a height of 1-3/4 inches to 4-1/4 inches at 1/4-inch intervals.

Due to many cutting conditions that exist, it is difficult to suggest a cutter deck setting that will work for every lawn.

There are two adjustments that can be made to the cutter deck, pitch and height.

PITCH is the angle of the blades (comparing front to rear).

HEIGHT is the nominal distance the blade is off of the ground. This measurement is made with the blades pointed side to side and distance is measured between the cutting tip and ground. (Also see Blade Height Adjustment).

Changes to the cutting height can be achieved by repositioning the cutter deck. (This adjustment will also effect the pitch of the deck). There are three available positions. See Figure 6-7.

Caster spacers also can be repositioned to change the cutting heights and to change the pitch of the cutter deck. See Figure 6-8.

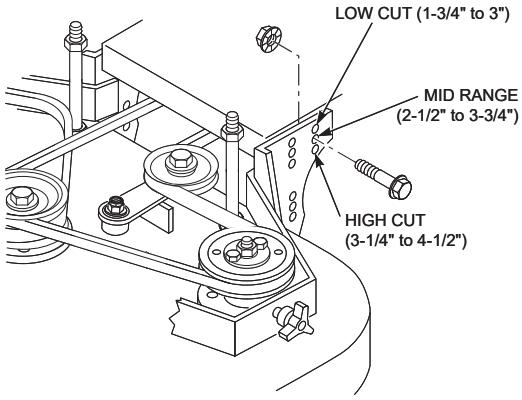

Figure 6-7. Adjusting Cutting Height

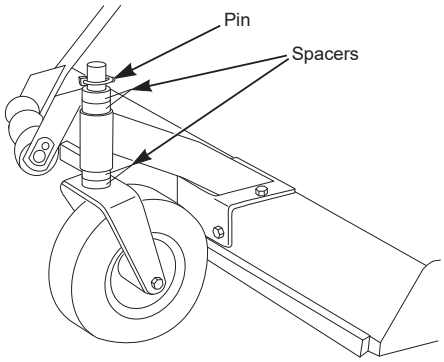

Figure 6-8. Caster Wheel Spacers

BLADE HEIGHT ADJUSTMENT

Adjusting the blade height can be done by moving any number of the five smaller 1/4" spacers on the blade mounting bolts to the top of the spindle shaft or below the spindle shaft.

-NOTE-

All blades should be positioned equally.

⚠ WARNING

Blades have a sharp cutting edge. Wear proper eye protection and protective gloves or wrap the blades with protective material when removing, sharpening and installing blades.

For best cut and discharge, a minimum of three spacers should be installed between the blade and the spindle. See Figure 6-9.

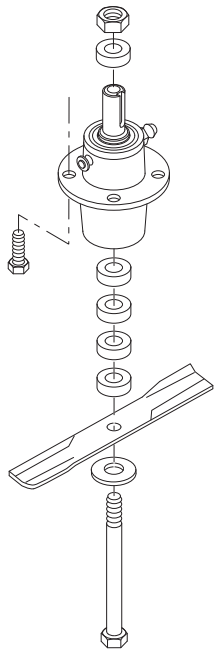

Figure 6-9. Blade Spacers

CUSTOM-CUT BAFFLE ADJUSTMENT

The Custom-Cut Baffle is designed to deliver optimum airflow and superior cutting performance in any type of grass. The Custom-Cut Baffle can be raised or lowered to precisely tailor the deck's performance for the type of grass being cut. The baffle can be set in seven (7) different positions for optimum performance.

A. 3-1/2" or 3-3/4" Position - (See Figure 6-10). For very tall, wiry or tough-to-cut grass.

B. 4" (factory setting), 4-1/4" or 4-1/2" Position - (See Figure 6-10). For general purpose cutting. This gives the best mix of cutting performance in all types of grass.

C. 4-3/4" or 5-1/4" Position - (See Figure 6-10). Placing the baffle in either the 4-3/4" or 5-1/4" setting will enhance fall cutting (leaf pickup) and reduce cutter deck "blowout".

To adjust the Custom-Cut Baffle height:

1. Place the cutter deck in the transport position.
2. Remove the hardware securing the Custom-Cut Baffle to the cutter deck.

- NOTE -

Hardware location used in the illustrations are for reference only. Location of hardware may vary depending on cutter deck size.

3. Move the Custom-Cut Baffle to desired position. (See Figures 6-10).
4. Reinstall the mounting hardware. Torque hardware to 39 ft-lbs.

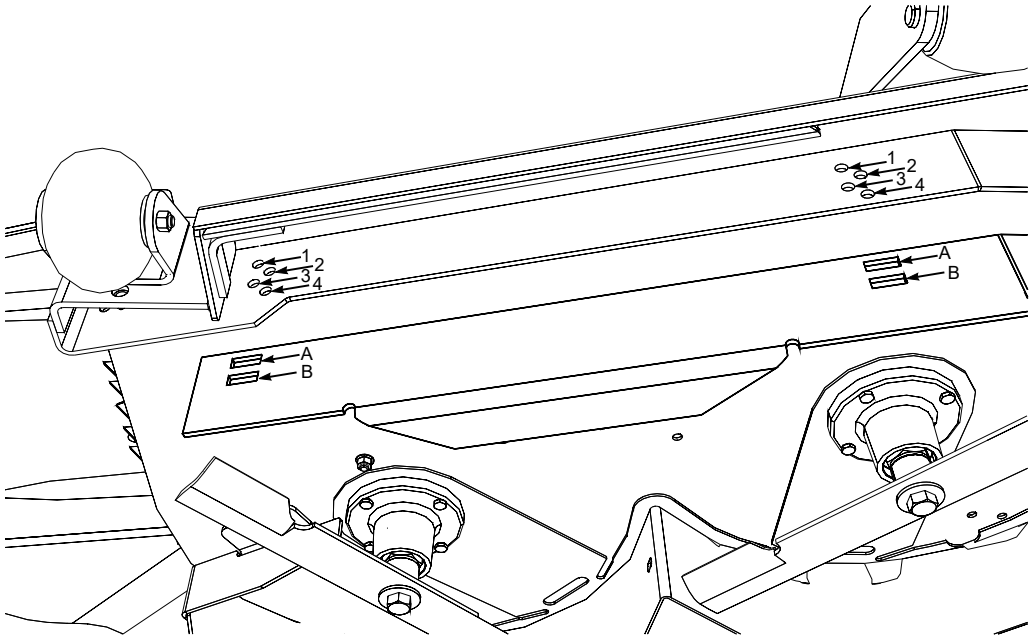

Custom-Cut Baffle Adjustment

Mounting Slot Selected	Mounting Hardware Location			
Slot “A”	Hole 1	Hole 2	Hole 3	Hole 4
Height (inches)	3-3/4”	4-1/4”	4-3/4”	5-1/4”
Slot “B”		Hole 2	Hole 3	Hole 4
Height (inches)		3-1/2”	4”	4-1/2”

Figure 6-10. Custom-Cut Baffle Adjustment

6.9 ELECTRIC CLUTCH ADJUSTMENT

The electric clutch serves two functions in the operation of the mower. In addition to starting and stopping the power flow to the cutter blades, the clutch also acts as a brake to assist in stopping blade rotation when the PTO is switched off or the operator presence circuit is interrupted.

When the clutch is disengaged, the air gap between the armature and rotor must be adjusted to fifteen thousandths of an inch, 0.015, for proper operation. The air gap adjustment is made at three bolts on the clutch. There are three inspection windows, one next to each adjusting bolt. See Figure 6-11.

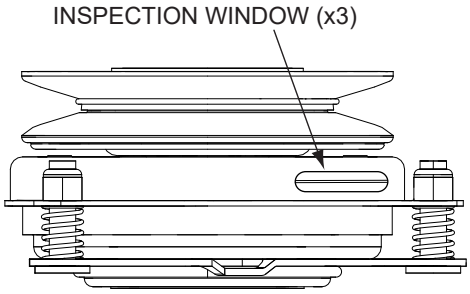

Figure 6-11. Clutch Air Gap Adjustment

1. Locate the inspection windows on the clutch.
2. Place a 0.015 feeler gauge in the slot between the rotor and the armature. See Figure 6-12.

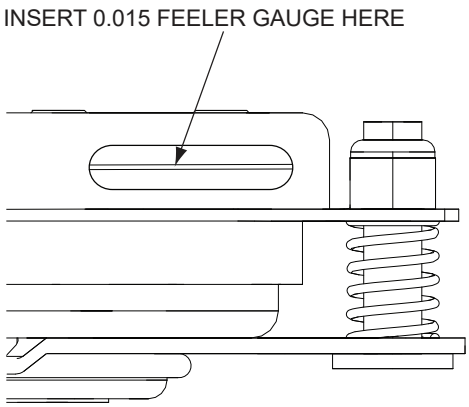

Figure 6-12. Clutch Air Gap Adjustment

3. Tighten or loosen the adjusting bolt as needed to achieve the 0.015 inch air gap. See Figure 6-13. Perform this operation at all three inspection windows.

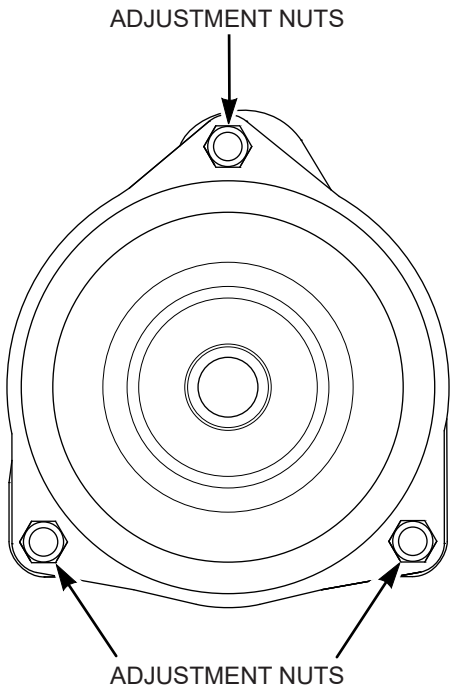

Figure 6-13. Clutch Air Gap Adjustment

This adjustment should be done every 500 hours of operation or annually, whichever comes first. In cases where the machine is heavily used, air gap settings should be checked more often.

If the air gap is too narrow, the clutch armature may drag when disengaged, resulting in premature failure.

If the air gap is too wide, the clutch may be slow to engage as the magnet must pull the armature in from a greater distance.

MAINTENANCE

7.1 MAINTENANCE CHART - RECOMMENDED SERVICE INTERVALS

HOURS							PROCEDURE	COMMENTS
BREAK-IN (FIRST 10)	8	20	40	100	200	500		
X							Check all hardware for tightness	
X							Check all belts for proper alignment	See Section 7.6
	X						Check all hydraulic fittings and hoses for leaks	See Section 2.5
	X						Check engine oil level	See Section 7.3
	X						*Clean mower	
	X						Check tire pressure	See Section 7.8
	X						*Clean air filter element	See Section 7.5
	X						Check condition of blades	See Section 7.7
	X						Sharpen cutter blades	See Section 7.7
	X						Check tire pressure	See Section 7.10
	X						Check belt tension	See Section 6.3
	X						Check the operator interlock system	See Section 2.4 / 4.3
		X					Change engine oil and filter	See Section 7.3
			X				Grease spindle bearings	
			X				Check belts for proper alignment	See Section 7.6
				X			Check condition of fuel lines	
				X			Check all belts for proper alignment	
				X			*Replace engine air filter	See engine operator's manual
				X			Grease caster wheel bearings	See Section 7.2
				X			Change hydraulic system oil level	See Section 7.3
				X			Check all hardware for tightness	
				X			Change engine oil	See Section 7.4
				X			Grease brake lever and brake actuator levers	See Section 7.2
				X			*Clean air cleaner element	See Section 7.5

MAINTENANCE CHART - RECOMMENDED SERVICE INTERVALS (CONT'D)

HOURS						PROCEDURE	COMMENTS
BREAK-IN (FIRST 10)	8	40	100	200	500		
				X		Check hardware for tightness	
				X		Change engine oil filter	See Section 7.4
				X		Inspect fuel lines, vapor hoses, and tank grommets after 200 hours of operation or annually.	
					X	Replace engine fuel filter	See Section 7.5
					X	Grease caster wheel pivot shafts	See Section 7.2
					X	Drain hydraulic system and replace oil and filter	See Section 7.3
					X	Adjust electric PTO clutch	See Section 6.6

* Perform these maintenance procedures more frequently under extreme dusty or dirty conditions

7.2 LUBRICATION

GREASE FITTING LUBRICATION CHART

LOCATION	LUBRICATION INTERVAL	LUBRICANT	NO. OF PLACES
1 - Caster Wheel Pivot	100 Hours / Bi-Weekly	Chassis Grease	2
2 - Caster Wheel Bearings	100 Hours / Monthly	Chassis Grease	2
3 - Brake Actuator Levers	100 Hours / Bi-Weekly	Chassis Grease	2
4 - Cutter Deck Spindles	40 Hours / Weekly	Spindle Grease	2 / 3
5 - Pump Control Pivot	100 Hours / Monthly	Chassis Grease	2
6 - Brake Lever	100 Hours / Bi-Weekly	Chassis Grease	1
7 - Neutral Cam Pivot	200 Hours / Monthly	Chassis Grease	2

+ Compatible Greases: Scag Premium Chassis Grease p/n 486257
Scag Premium Spindle Grease p/n 486258

* PROCEDURE: Remove grease cap, part number 484195. Remove plug, part number 482028-01, and install grease zerk. Apply grease to the fitting until new grease appears at the top of the caster extension. Remove the grease zerk and reinstall the plug. Reinstall the grease cap. Special tool, part number 47007, is recommended for use in the installation of the grease cap.

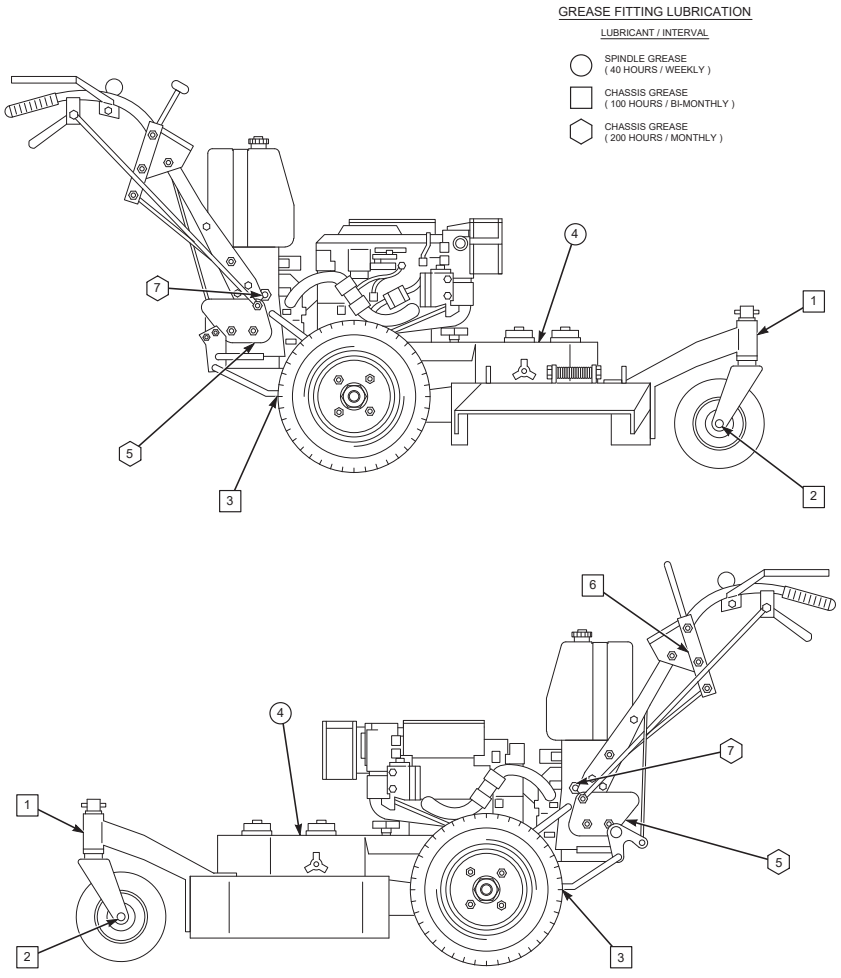

Figure 7-1. Lubrication Points

7.3 HYDRAULIC SYSTEM

A. CHECKING HYDRAULIC OIL LEVEL

The hydraulic oil level should be checked after the first 8 hours of operation. Thereafter, check the oil after every 100 hours of machine operation or monthly, whichever occurs first.

- IMPORTANT -

If the oil level is consistently low, check for leaks and correct immediately.

1. Wipe dirt and contaminants from around the reservoir cap. Remove the cap from the hydraulic oil reservoir.
2. Visually check the level of hydraulic oil. Hydraulic oil must be at least 2" inches from top of the filler neck. If the level cannot be determined visually, use a clean tape measure to check the level. If the fluid is low, add 20W50 motor oil. DO NOT overfill; (overfilling the oil reservoir may cause oil seepage around the cap area).
3. Clean the fill cap and install it onto the reservoir.

B. CHANGING HYDRAULIC OIL

The hydraulic oil should be changed after the first 100 hours and every 500 hours or annually, whichever occurs first. The oil should also be changed if the color of the fluid has become black or milky. A black color and/or a rancid odor usually indicates possible overheating of the oil, and a milky color usually indicates water in the hydraulic oil.

- IMPORTANT -

The hydraulic oil should be changed if you notice the presence of water or a rancid odor to the hydraulic oil.

1. Park the mower on a level surface and stop the engine.
2. Place a suitable container under the hydraulic oil drain. Remove the fill cap from the reservoir. Remove the drain cap from the tee fitting located on the hydraulic system filter head. See Figure 7-2. Allow the fluid to drain into the container and properly discard it.

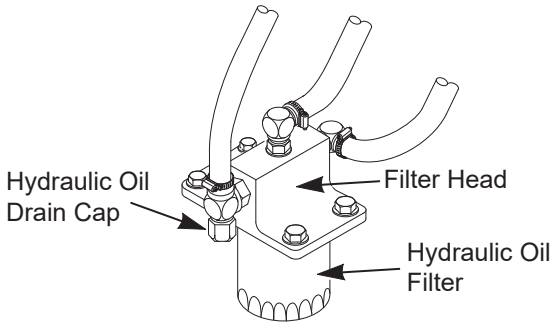

Figure 7-2. Hydraulic Oil Filter and Drain Cap

3. Re-install the drain plug into the tee fitting and be sure it is tight.

- NOTE -

Before refilling the hydraulic oil reservoir the hydraulic oil filter should be changed as outlined in Procedure C "Changing Hydraulic Oil Filter Element".

4. Fill the reservoir to 2" inches from the top of the filler neck with 20W50 motor oil.
5. Replace the reservoir fill cap. Start the engine and drive forward and backward for two minutes. Check the oil level in the reservoir. If necessary, add oil to the reservoir.

C. CHANGING HYDRAULIC OIL FILTER ELEMENT

The hydraulic oil filter should be changed after every 500 hours of operation or annually, whichever occurs first.

1. Remove the oil filter element and properly discard it. See Figure 7-2. Fill the new filter with clean oil and install the filter. Hand tighten only.
2. Run the engine at idle speed with the speed control lever in neutral for five minutes.
3. Check the oil level in the hydraulic tank. It must be 2" inches from the top of the filler neck. If necessary, add SAE 20W50 motor oil.

7.4 ENGINE OIL

A. CHECKING ENGINE CRANKCASE OIL LEVEL

The engine oil level should be checked after every 8 hours of operation or daily as instructed in the Engine Operator's Manual furnished with this mower.

B. CHANGING ENGINE CRANKCASE OIL

After the first 20 hours of operation, change the engine crankcase oil and replace the oil filter. Thereafter, change the engine crankcase oil after every 100 hours of operation or bi-weekly, whichever occurs first. Refer to the Engine Operator's Manual furnished with this mower for instructions.

C. CHANGING ENGINE OIL FILTER

After the first 20 hours of operation, replace the engine oil filter. Thereafter, replace the oil filter after every 200 hours of operation or every month, whichever occurs first. Refer to Engine Operator's Manual for instructions.

7.5 ENGINE FUEL SYSTEM

⚠ DANGER

To avoid injury from burns, allow the mower to cool before removing the fuel tank cap and refueling.

A. FILLING THE FUEL TANK

Fill to the bottom of the filler neck insert (approximately 5-1/2 gallons indicating Full (F) on the fuel gauge) at the beginning of each operating day. See Figure 7-3. Do not overfill. Use clean, fresh unleaded gasoline with a minimum octane rating of 87 and a maximum of 10% Ethanol.

DO NOT use E85 Fuel. Using E85 Fuel will cause severe damage to the engine.

DO NOT over fill. The empty space in the fuel tank allows the fuel to expand. Overfilling the fuel tank may result in fuel leakage, damage to the engine and/or damage to the machine's emissions system.

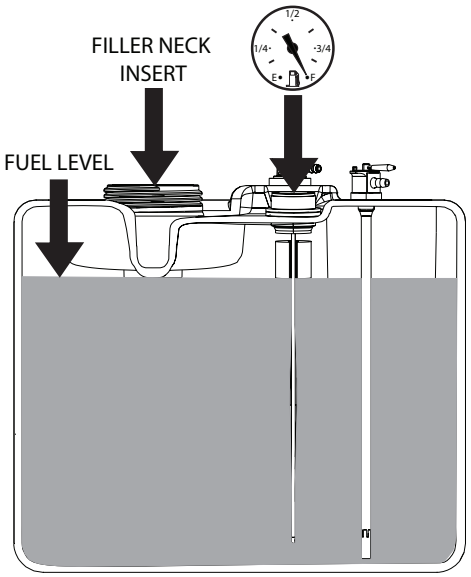

Figure 7-3. C.A.R.B. / EPA Phase 3 Fuel Level

To avoid personal injury or property damage, use extreme care in handling gasoline. Gasoline is extremely flammable and the vapors are explosive.

1. Extinguish all cigarettes, cigars, pipes and other sources of ignition.
2. Use only an approved gasoline container.
3. Never remove the gas cap or add fuel with the engine running. Allow the engine to completely cool before fueling.
4. Never fuel the machine indoors or in an enclosed trailer.
5. DO NOT start the engine until any spilled fuel has been cleaned up or has evaporated.
6. Never store the machine or fuel container where there is an open flame, spark or pilot light such as on a water heater or other appliances.
7. Never fill containers inside a vehicle or on a truck or trailer bed with a plastic liner. Always place containers on the ground away from your vehicle before filling.
8. Remove the machine from the truck or trailer and fuel on level ground. If this is not possible, then refuel the machine with a portable container, rather than from a gasoline dispenser nozzle.
9. Keep the nozzle in contact with the rim of fuel tank or container opening at all times until fueling is complete. Do not use a nozzle lock-open device.

10. If fuel is spilled on clothing, change clothing immediately and wash affected skin.
11. Replace gas cap and tighten securely. For Low Emission (LE) and EPA Phase 3 (produced after 1/1/2011) models, tighten the fuel cap until it ratchets.

B. REPLACING IN-LINE FUEL FILTER ELEMENTS

The engine fuel filter should be replaced after every 500 hours of operation or annually, whichever occurs first.

1. Close the shut-off valve.
2. Remove and replace the engine fuel filter. Open the fuel shut-off valve.

7.6 ENGINE AIR CLEANER

A. CLEANING AND/OR REPLACING AIR CLEANER ELEMENT

For any air cleaner, the operating environment dictates the air cleaner service periods. Inspect and clean the air cleaner element after every 100 hours of operation or bi-weekly, whichever occurs first and replace the element if required.

- NOTE -

In extremely dusty conditions it may be necessary to check the element once or twice daily to prevent engine damage.

1. Remove the air cleaner cover. Set aside.
2. Remove the air cleaner and inspect.
3. Clean or replace the air cleaner and foam pre-cleaner as recommended by the engine manufacturer.
4. Replace the air cleaner cover and secure.

7.7 BATTERY - ELECTRIC START MODELS

⚠ WARNING

Lead-acid batteries produce flammable and explosive gases. To avoid personal injury when checking, testing or charging batteries, DO NOT use smoking materials near batteries. Keep arcs, sparks and flames away from batteries. Provide proper ventilation and wear safety glasses.

⚠ WARNING

Battery posts, terminals, and related accessories contain lead and lead compounds, chemicals known to cause cancer and reproductive harm. Wash hands after handling.

⚠ WARNING

Electric storage battery fluid contains sulfuric acid which is POISON and can cause SEVERE CHEMICAL BURNS. Avoid contact of fluid with eyes, skin, or clothing. Use proper protective gear when handling batteries. DO NOT tip any battery beyond 45° angle in any direction. If fluid contact does occur, follow first aid suggestions below.

BATTERY ELECTROLYTE FIRST AID

External Contact — Flush with water.

Eyes — Flush with water for at least 15 minutes and get medical attention immediately.

Internal — Drink large quantities of water. Follow with Milk Of Magnesia, beaten egg, or vegetable oil. Get medical attention immediately. In case of internal contact, DO NOT give fluids that would induce vomiting.

A. CHARGING THE BATTERY

Refer to the battery charger's manual for specific instructions.

Under normal conditions the engine's alternator will have no problem keeping a charge on the battery. If the battery has been completely discharged for a long period of time, the alternator may not be able to recharge the battery, and a battery charger will be required.

DO NOT charge a frozen battery. It may explode and cause injury. Let the battery warm before attaching a charger.

Whenever possible, remove the battery from the mower before charging and make sure the electrolyte covers the plates in all cells.

⚠ WARNING

BATTERIES PRODUCE EXPLOSIVE GASES. Charge the battery in a well ventilated space so gases produced while charging can dissipate.

Charging rates between 3 and 50 amperes are satisfactory if excessive gassing or spewing of electrolyte does not occur or the battery does not feel excessively hot (over 125°F). If spewing or gassing occurs or the temperature exceeds 125°F, the charging rate must be reduced or temporarily stopped to permit cooling.

B. JUMP STARTING

1. The booster battery must be a 12 volt type. If a vehicle is used for jump starting, it must have a negative ground system.
2. When connecting the jumper cables, connect the positive cable to the positive battery post, then connect the negative cable to the negative battery post.

7.8 CUTTER BLADES

A. BLADE INSPECTION

1. Remove the ignition key before servicing the blades.

⚠ WARNING

Always wear proper hand and eye protection when working with cutter blades.

2. Check the cutter blades for straightness. If the cutter blades appear bent, they will need to be replaced.
3. Check the cutter blades for wear. If any part of the cutter blade is worn to 1/2 its original thickness, replace the cutter blade.

⚠ WARNING

Do not attempt to straighten a bent blade, and never weld a broken or cracked blade. Always replace it with a new blade to assure safety.

4. Check the cutter blades for gouges. If there are gouges on the top or bottom surfaces of the cutter blade, replace the cutter blade.
5. If a blade cutting edge is dull or nicked, it should be sharpened. Remove the blades for sharpening. See "Blade Replacement" Section 7.8C.

- NOTE -

Keep the blades sharp. Cutting with dull blades not only yields a poor mowing job, but slows the cutting speed of the mower and causes extra wear on the engine and the blade drive by pulling hard.

B. BLADE SHARPENING

- NOTE -

If possible, use a file to sharpen the blade. Using a wheel grinder may burn the blade.

- NOTE -

DO NOT sharpen the blades beyond 1/3 of the width of the blade. See Figure 7-4.

1. Sharpen the cutting edge at the same bevel as the original. See Figure 7-4. Sharpen only the top of the cutting edge to maintain sharpness.

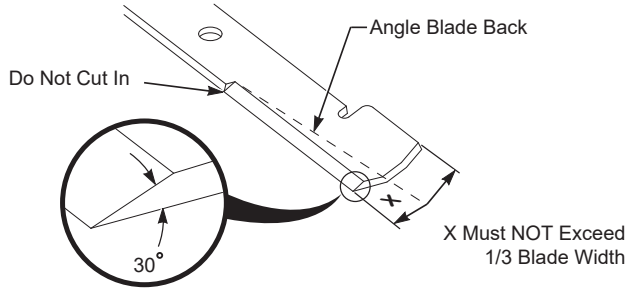

Figure 7-4. Blade Sharpening

2. Check the balance of the blade. If the blades are out of balance, vibration and premature wear can occur. The cutter blades should be balanced to 1-1/2 oz-in. See your Authorized Scag Power Equipment Dealer for blade balancing or special tools, if you choose to balance your own blades.

C. BLADE REPLACEMENT

⚠ WARNING

Always wear proper hand and eye protection when working with cutter blades.

1. Remove the ignition key before replacing the blades.
2. Remove the belt cover.
3. Secure the cutter blades to prevent them from rotating, (use the optional Blade Buddy tool P/N 9212, to assist in securing the cutter blades), remove the blade attaching bolt. Remove the cutter blade, bolt, lockwasher and flatwasher from the spindle shaft. See Figure 7-5.

- NOTE -

Be sure that the blade is installed with the lift wing towards the top of the cutter deck.

⚠ CAUTION

Inspect the cutter blade spacer(s) and washer for wear and/or cupping. Replace the worn parts. Worn spacer(s) and/or washer will not allow proper tightening of the cutter blade and can lead to cutter blade failure, personal injury or property damage.

4. Install the cutter blade on to the cutter spindle shaft. Secure the blades from rotating and torque to 75 ft/lbs. See Figure 7-5.
5. Install the belt cover.

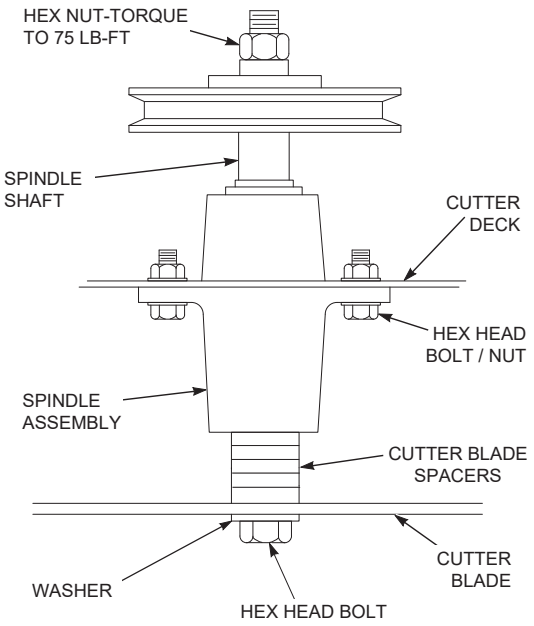

Figure 7-5. Blade Replacement

7.9 TIRES

Check the tire pressures after every 8 hours of operation or daily.

Caster Wheels	Flat-Free
Drive Wheels	12 PSI

ILLUSTRATED PARTS LIST

8.1 SCAG APPROVED ATTACHMENTS AND ACCESSORIES.

Attachments and accessories manufactured by companies other than Scag Power Equipment are not approved for use on this machine.

Scag approved attachments and accessories:

Grass Catchers	P/N
GC-F4 (fabric grass catcher)	926Z

Mulching Accessories	P/N
Mulch Plate (36)	927U
Mulch Plate (48)	927V
Mulch Plate (52)	927W
Mulch Plate (61)	927X
Hurricane Mulch Kit (36)	927M
Hurricane Plus Mulch Kit (48)	927E
Hurricane Plus Mulch Kit (52)	927P
Hurricane Plus Mulch Kit (61)	927Q

Miscellaneous	P/N
Blade Buddy	9212
Chrome Wheel Cover (8")	920H
Turbo Baffle (48/52)	424677
Turbo Baffle (61)	424209

Scag Premium Lubricants	P/N
Chassis Grease	486257
Spindle Grease	486258
Hydraulic System Oil (1 gal)	486254
Hydraulic System Oil (1 qt)	486255

CASTER ASSEMBLY

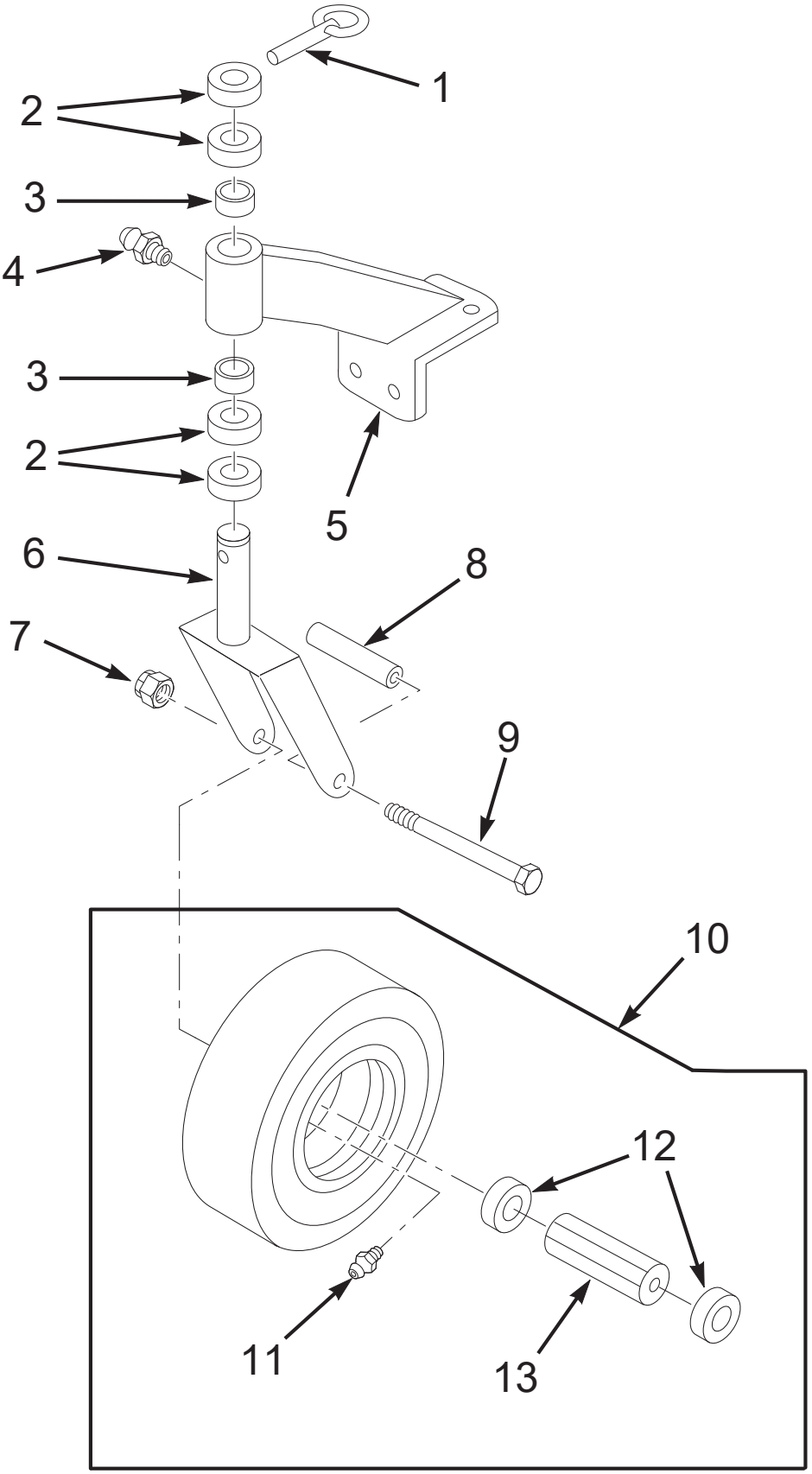

CASTER ASSEMBLY

Ref. No.	Part No.	Description
1	04066-01	Quick Pin
2	43037-01	Spacer, Spacer Yoke, 1/2" Long
3	48100-01	Bronze Bearing
4	48114-04	Greasing Fitting
5	46082	Support Assembly (Incl. #3 & #4)
6	45006	Caster Yoke
7	04021-07	Nut, Elastic Stop 1/2-13
8	43022	Sleeve, Caster Wheel Bearing
9	04001-37	Bolt, Hex Head 1/2-13 x 5-1/2"
10	9275	Flat-Free Tire Assy. (Incl. #11, #12, #13)
11	48114-03	Grease Fitting, 45 Degree 1/4-28
12	481770	Retainer, Caster Wheel Bearing
13	481769	Roller Bearing, Caster Wheel

36A CUTTER DECK

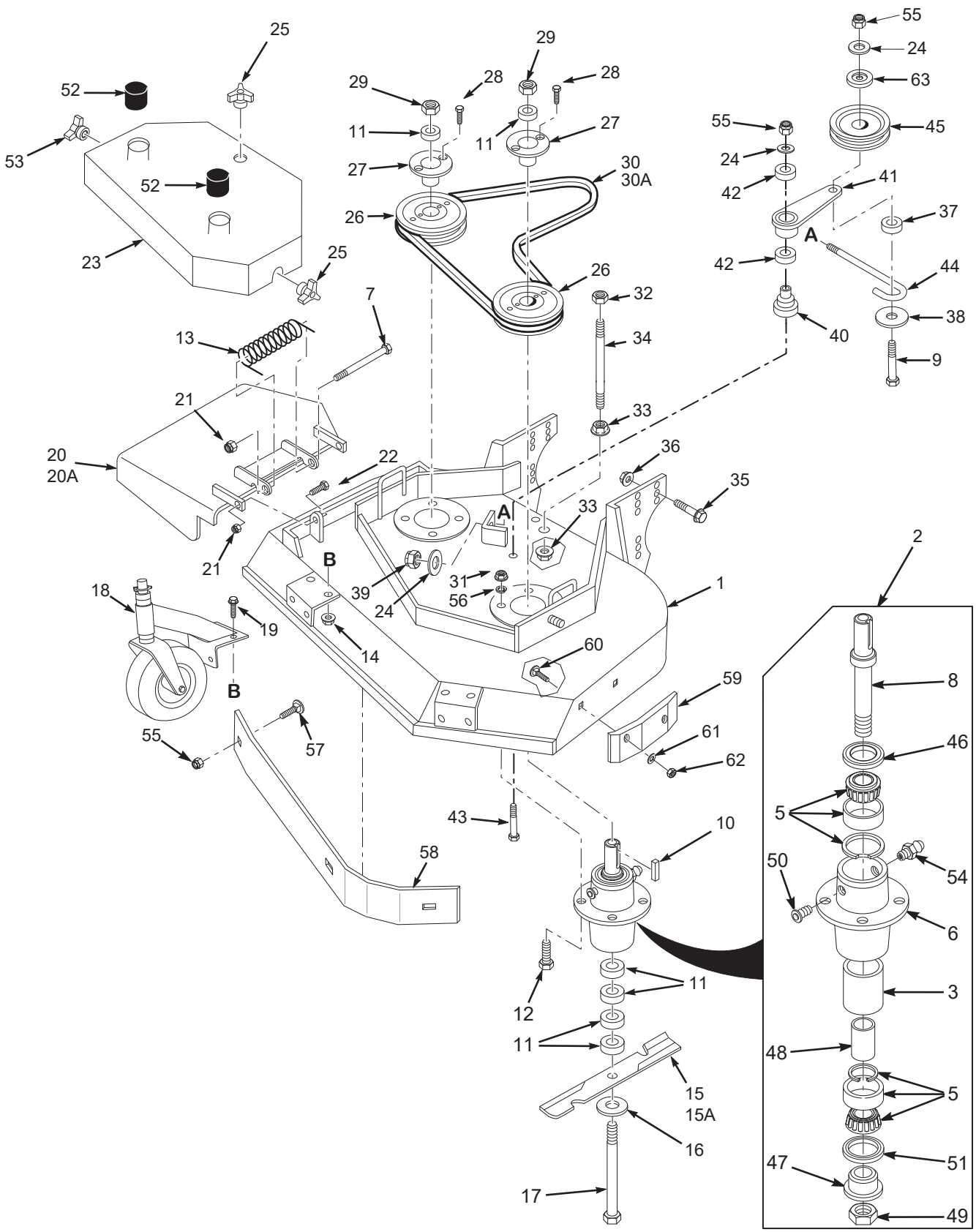

36A CUTTER DECK

Ref. No.	Part No.	Description	36
1	461848	Cutter Deck w/Decals	x
2	461663	Cutter Spindle Assembly	x
3	43312	Spacer, Outside	x
5	481022	Bearing, Tapered	x
6	43644	Spindle Housing	x
7	04001-154	Bolt, 5/16-18 x 4-3/4"	x
8	43589	Spindle Shaft	x
9	04001-51	Bolt, 3/8-16 x 3-3/4" Hex Head	x
10	04063-08	Key, 1/4 x 1/4 x 2"	x
11	43592	Spacer, Cutter Blade - Small	x
12	04001-175	Bolt, 5/16-18 x 1-1/2" Hex Head Grade 8	x
13	482245	Spring, Chute Return	x
14	04019-03	Nut 5/16-18 Serrated Flange	x
15	481707	Cutter Blade, 18"	x
15A	481711	Cutter Blade, 18 Hi-Lift	x
16	04043-06	Flatwasher, 5/8 W	x
17	04001-41	Hex Hd. Bolt, 5/8-11 x 9-1/2"	x
18	461023	Caster Assembly	x
19	04017-16	Cpscrw,5/16-18 x 3/4" Ser.Flg. Hex Head	x
20	461295	Discharge Chute	x
20A	*462469	CA Discharge Chute	x
	*425872	Turbo Baffle	x
21	04021-10	Hex Nut, 5/16-18 Elastic Stop	x
22	04001-09	Hex Hd Bolt, 5/16-18 x 1"	x
23	462393	Belt Cover Assy (Incl. Decal)	x
24	04043-04	Flat Washer, 3/8" Special	x
25	04029-03	Wing Nut, 3/8-16	x
26	482744	Pulley	x
27	48926	Tapered Hub	x
28	04001-172	Hex Hd. Bolt, 1/4-20 x 1"	x
29	04020-09	Hex Nut, 5/8-11	x
30	48204	Belt, Blade Drive	x
31	04021-22	Elastic Stop Nut, 5/16-18 Grade 8	x
32	04021-05	Hex Nut, 3/8-16 Center Locknut	x
33	04019-04	Nut, 3/8-16 Serrated Flange	x
34	04004-02	Support, Belt Cover	x
35	04017-37	Cpscrw, 1/2-13 x 1=1/4" Ser.Flg. HH	x

Ref. No.	Part No.	Description	36
36	04117-04	Nut, 1/2-13 Flange Elastic Stop	x
37	43277	Spacer, J-Hook	x
38	04041-12	Flatwasher, 3/8 x 1-1/2 x 16 GA	x
39	04021-09	Elastic Stop Nut, 3/8-16	x
40	43681	Idler Pivot	x
41	461841	Idler Arm Assy. (Inc. 42)	x
42	48224	Bearing	x
43	04001-62	Cpscrw, 3/8-16 x 3-1/4" Hex Head	x
44	44078	J-Hook	x
45	483215	Idler Pulley, Belt Clutch	x
46	481024	Seal, Cutter Spindle	x
47	43297	Spindle Bushing	x
48	43296	Spacer, Inside	x
49	481035	Nut,1.06-18	x
50	48677	Relief Fitting, Cutter Spindle	x
51	481025	Seal, Cutter Spindle	x
52	484368	Cap, Spindle	x
53	04029-04	Wing Nut, 3/8-16 (Small) RH side	x
54	48114-04	Grease Fitting	x
55	04021-09	Nut, Hex Elastic Stop 3/8-16	x
56	04030-03	Lock Washer, 5/16"	x
57	04003-23	Bolt, Carriage 3/8-16 x 1"	x
58	423783	Baffle Weldment	x
59	483174	Pad, Deck Wear	x
60	04003-12	Bolt, Carriage 5/16-18 x 3/4"	x
61	04040-04	Flatwasher, 5/16"	x
62	04021-04	Hex Nut, 5/16-18 Center Locknut	x
63	424367	Dust Shield	x

* = California Models Only (not shown)

48V & 52V CUTTER DECKS

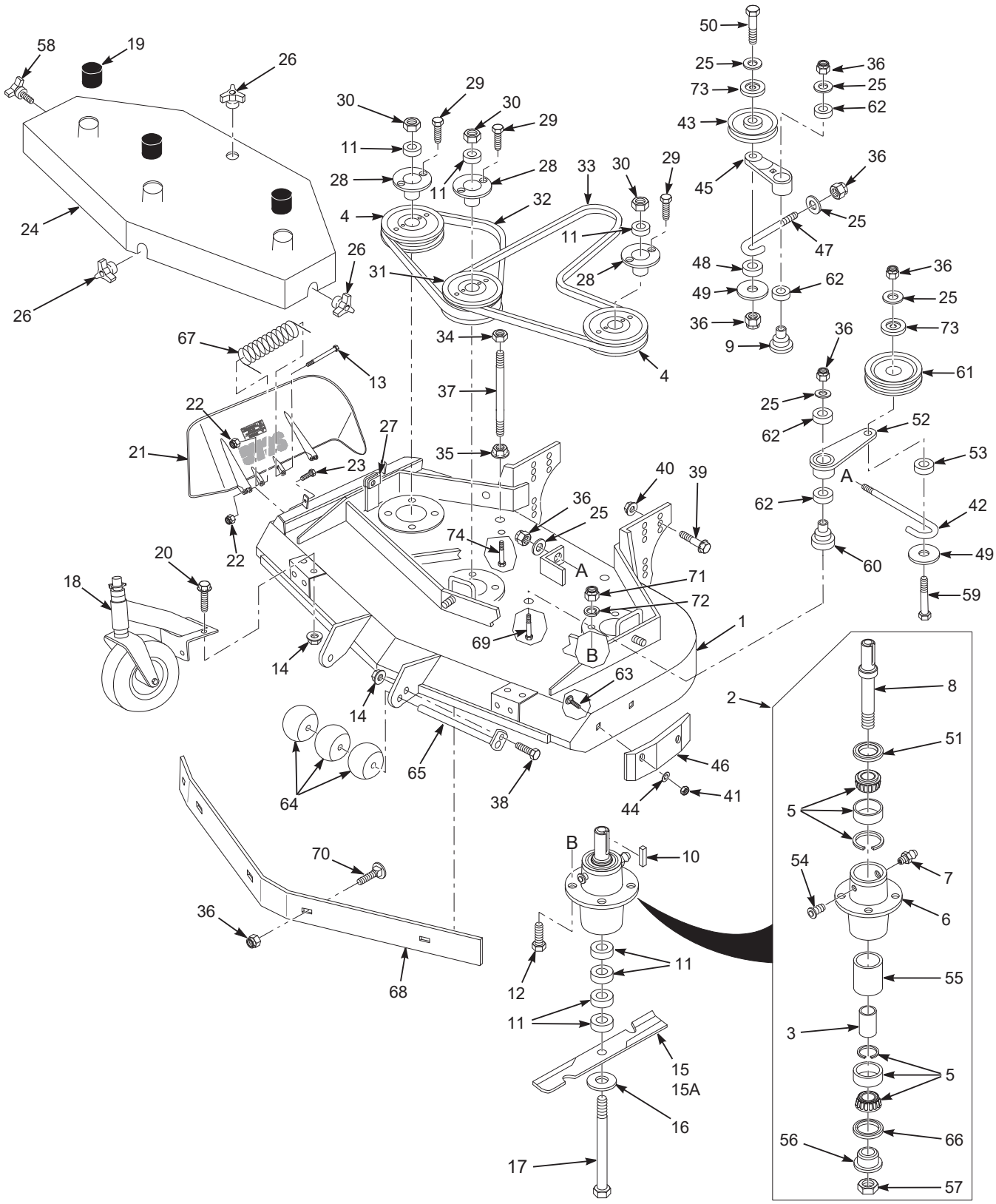

48V & 52V CUTTER DECKS

Ref. No.	Part No.	Description	48	52
1	461852	Cutter Deck w/Decals	x	
1*	461855	Cutter Deck w/Decals		x
1*	461992	Cutter Deck w/Decals		x
2	461663	Spindle Assembly	x	x
3	43296	Spacer, Inside	x	x
4	482744	Pulley	x	x
5	481022	Tapered Bearing	x	x
6	43644	Spindle Housing	x	x
7	48114-04	Grease Fitting Str. 5/16"	x	x
8	43589	Spindle Shaft	x	x
9	43682	Idler Pivot	x	x
10	04063-08	Key, 1/4 x 1/4 x 2"	x	x
11	43592	Spacer, Cutter Blade - Small	x	x
12	04001-175	Bolt, 5/16-18 x 1-1/2" Hex Head Gr. 8	x	x
13	04001-154	Bolt, 5/16-18 x 4-3/4" Hex Head	x	x
14	04019-03	Serr. Flange Nut, 5/16-18	x	x
15	481706	Cutter Blade 16-1/2"	x	
	481707	Cutter Blade 18"		x
15A	481710	Cutter Blade 16-1/2 Hi-Lift	x	
	481711	Cutter Blade 18 Hi-Lift		x
16	04043-06	Flatwasher,5/8" (.688 x 1.75 x .134)	x	x
17	04001-41	Hex Head Bolt, 5/8-11 x 9-1/2"	x	x
18	461023	Caster Assembly	x	x
19	484368	Cap, Spindle	x	x
20	04017-16	Capscrew, 5/16-18 x 3/4"	x	x
21	461844	Discharge Chute 48V	x	
	462473**	CA Discharge Chute, 48V	x	
	425619**	Turbo Baffle, 48V	x	
	461845	Discharge Chute 52V		x
	462475**	CA Discharge Chute, 52V		x
	424211**	Turbo Baffle, 52V		x
22	04021-10	Nut, 5/16-18 Elastic Elastic Stop	x	x
23	04001-11	Bolt, 5/16-18 x 1-1/2" Hex Head	x	x
24	462394	Belt Cover (Incl. decals)	x	
	462395	Belt Cover (Incl. decals)		x
25	04043-04	Flat Washer, 3/8" Special	x	x
26	04029-03	Wing Nut, 3/8-16 (Large)	x	x
27	04110-03	U-Nut, 3/8-16	x	x
28	48926	Tapered Hub		x
29	04001-172	Bolt, 1/4-20 x 1" Hex Head Grade 8	x	x
30	04020-09	Nut, 5/8-11 Hex	x	x
31	48923	Pulley, Double	x	x
32	48087	Belt, RH Blade Drive	x	
	48285	Belt, RH Blade Drive		x
33	48089	Belt, Blade Drive	x	
	483518	Belt, Blade Drive		x

Ref. No.	Part No.	Description	48	52
34	04021-05	Nut, 3/8-16, Nut Centerlock	x	x
35	04019-04	Nut, 3/8-16, Serrated Flange	x	x
36	04021-09	Nut, 3/8-16 Elastic Stop	x	x
37	04004-02	Bolt, 5/16-18 x 1" Hex Head	x	x
38	04001-09	Bolt, 5/16-18 x 1" Hex Head		x
39	04017-37	Cpscrw, 1/2-13 x 1-1/4" Ser. Flg. HH	x	x
40	04117-04	Nut, 1/2-13 Flange El. Stop	x	x
41	04021-04	Hex Nut, 5/16-18 Center Locknut	x	x
42	44078	J-Hook, 48V	x	
	43028	J-Hook, 52V		x
43	48181	Idler Pulley, “V” Groove	x	x
44	04040-04	Flatwasher, 5/16"	x	x
45	461091	Idler Arm Assy. (Incl. 62)	x	x
46	483176	Pad, Deck Wear	x	x
47	43028	J-Rod, Idler Pulley	x	x
48	43077	Spacer, J-Rod	x	x
49	04041-12	Washer, 3/8 x 1-1/2 x 16 ga.	x	x
50	04001-31	Bolt, 3/8-16 x 2-1/2" Hex Head	x	x
51	481024	Seal, Cutter Spindle	x	x
52	461841	Idler Arm Assy (Includes 62)	x	x
53	43277	Spacer, J-Rod	x	x
54	48677	Relief Fitting, Cutter Spindle	x	x
55	43312	Spacer, Outside, Cutter Spindle	x	x
56	43297	Spindle Bushing	x	x
57	481035	Nut, Cutter Spindle	x	x
58	481625-01	Knob, w/stud	x	x
59	04001-51	Bolt, 3/8-16 x 3-3/4" Hex Head	x	x
60	43681	Idler Pivot	x	x
61	483215	Idler Pulley, Belt Clutch	x	x
62	48224	Bearing	x	x
63	04003-12	Bolt, Carriage 5/16-18 x 3/4"	x	x
64	482295	Guide Roller	x	x
65	45944	Roller Shaft	x	x
66	481025	Seal, Cutter Spindle	x	x
67	483378	Spring, Chute Return	x	x
68	424839	Baffle Weldment 48V	x	
	424840	Baffle Weldment 52V		x
69	04001-62	Bolt, 3/8-16 x 3-1/4" Hex Head	x	x
70	04003-23	Bolt, Carriage 3/8-16 x 1"	x	x
71	04021-22	Nut, Hex Lock 5/16-18	x	x
72	04030-03	Lock Washer 5/16"	x	x
73	424367	Dust Shield	x	x
74	04001-22	Bolt, 3/8-16 x 2-3/4" Hex Head	x	x

*Measure the engine deck to determine frame size. 461855 is for small frame (16") & 461992 is for large frame (20")

**California Models Only (not shown)

61V CUTTER DECK

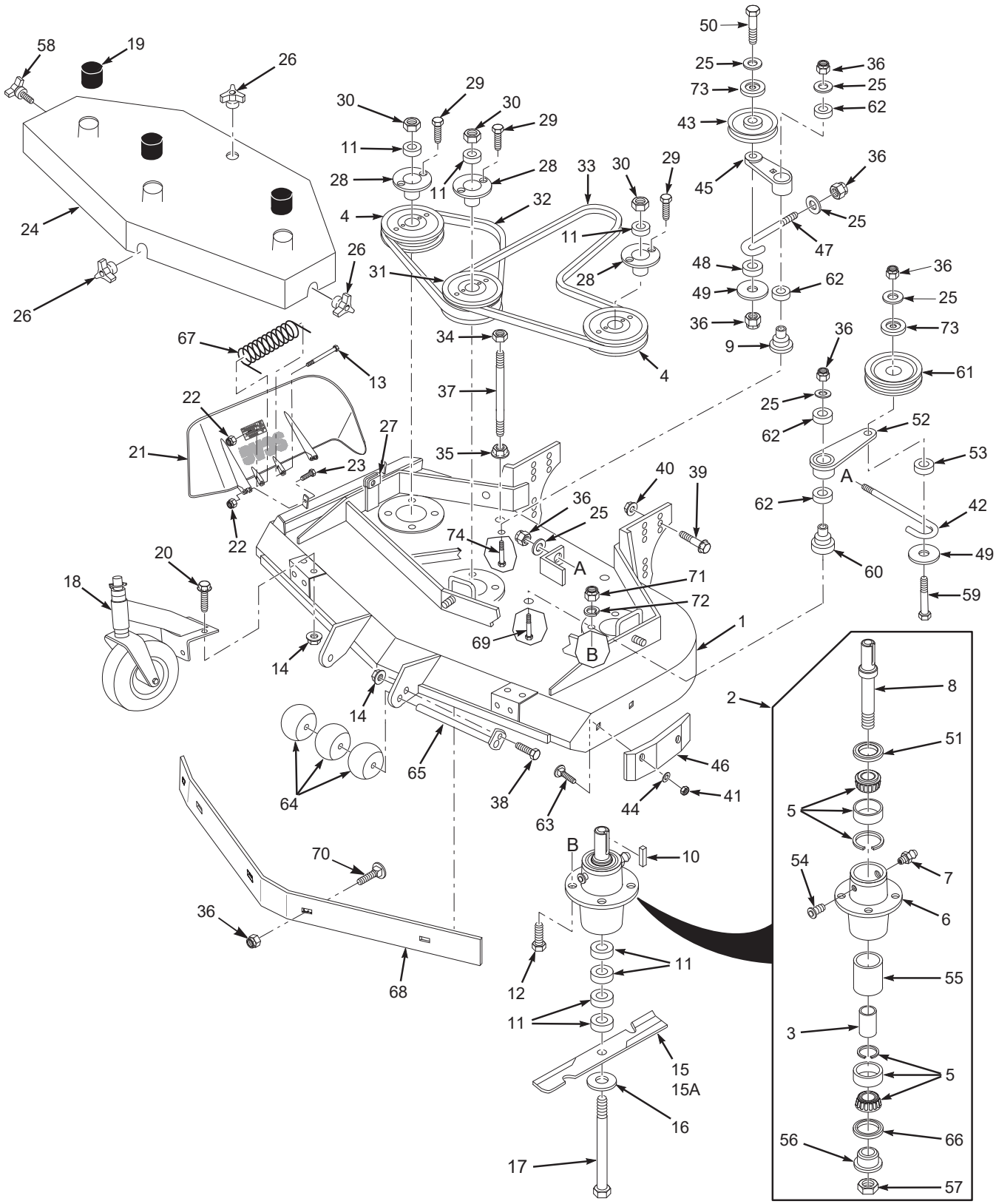

61V CUTTER DECK

Ref. No.	Part No.	Description
1	461860	Cutter Deck w/Decals
2	461663	Spindle Assembly
3	43296	Spacer, Inside
4	482745	Pulley
5	481022	Tapered Bearing
6	43644	Spindle Housing
7	48114-04	Grease Fitting Str. 5/16"
8	43589	Spindle Shaft
9	43682	Idler Pivot
10	04063-08	Key, 1/4 x 1/4 x 2"
11	43592	Spacer, Cutter Blade - Small
12	04001-175	Bolt, 5/16-18 x 1-1/2" Hex Head Gr. 8
13	04001-154	Bolt, 5/16-18 x 4-3/4" Hex Head
14	04019-03	Serr. Flange Nut, 5/16-18
15	481708	Cutter Blade 21"
15A	481712	Cutter Blade 21" Hi-Lift
16	04043-06	Flatwasher,5/8" (.688 x 1.75 x .134)
17	04001-41	Hex Head Bolt, 5/8-11 x 9-1/2"
18	461023	Caster Assembly
19	484368	Cap, Spindle
20	04017-16	Capscrew, 5/16-18 x 3/4"
21	461846	Discharge Chute 61V
22	04021-10	Nut, 5/16-18 Elastic Elastic Stop
23	04001-11	Bolt, 5/16-18 x 1-1/2" Hex Head
24	461868	Belt Cover (Incl. decals)
25	04043-04	Flat Washer, 3/8" Special
26	04029-03	Wing Nut, 3/8-16 (Large)
27	04110-03	U-Nut, 3/8-16
28	48926	Tapered Hub
29	04001-172	Bolt, 1/4-20 x 1" Hex Head Grade 8
30	04020-09	Nut, 5/8-11 Hex
31	48940	Pulley, Double
32	48265	Belt, RH Blade Drive
33	48088	Belt, Blade Drive
34	04021-05	Nut, 3/8-16, Nut Centerlock
35	04019-04	Nut, 3/8-16, Serrated Flange
36	04021-09	Nut, 3/8-16 Elastic Stop
37	04004-02	Bolt, 5/16-18 x 1" Hex Head
38	04001-09	Bolt, 5/16-18 x 1" Hex Head
39	04017-37	Cpscrw, 1/2-13 x 1-1/4" Ser.Flg. HH
40	04117-04	Nut, 1/2-13 Flange Elastic Stop
41	04021-04	Hex Nut, 5/16-18 Center Locknut
42	44078	J-Hook, 61V
43	48181	Idler Pulley, “V” Groove
44	04040-04	Flatwasher, 5/16"

Ref. No.	Part No.	Description
45	461091	Idler Arm Assy. (Incl. 62)
46	483176	Pad, Deck Wear
47	43028	J-Rod, Idler Pulley
48	43077	Spacer, J-Rod
49	04041-12	Washer, 3/8 x 1-1/2 x 16 ga.
50	04001-31	Bolt, 3/8-16 x 2-1/2" Hex Head
51	481024	Seal, Cutter Spindle
52	461841	Idler Arm Assy (Includes 62)
53	43277	Spacer, J-Rod
54	48677	Relief Fitting, Cutter Spindle
55	43312	Spacer, Outside, Cutter Spindle
56	43297	Spindle Bushing
57	481035	Nut, Cutter Spindle
58	481625-01	Knob, w/stud
59	04001-51	Bolt, 3/8-16 x 3-3/4" Hex Head
60	43681	Idler Pivot
61	483215	Idler Pulley, Belt Clutch
62	48224	Bearing
63	04003-12	Bolt, Carriage 5/16-18 x 3/4"
64	482295	Guide Roller
65	45944	Roller Shaft
66	481025	Seal, Cutter Spindle
67	483378	Spring, Chute Return
68	424841	Baffle Weldment 61V
69	04001-62	Bolt, 3/8-16 x 3-1/4" Hex Head
70	04003-23	Bolt, Carriage 3/8-16 x 1"
71	04021-22	Nut, Hex Lock 5/16-18
72	04030-03	Lock Washer 5/16"
73	424367	Dust Shield
74	04001-22	Bolt, 3/8-16 x 2-3/4" Hex Head

ENGINE DECK - MANUAL START

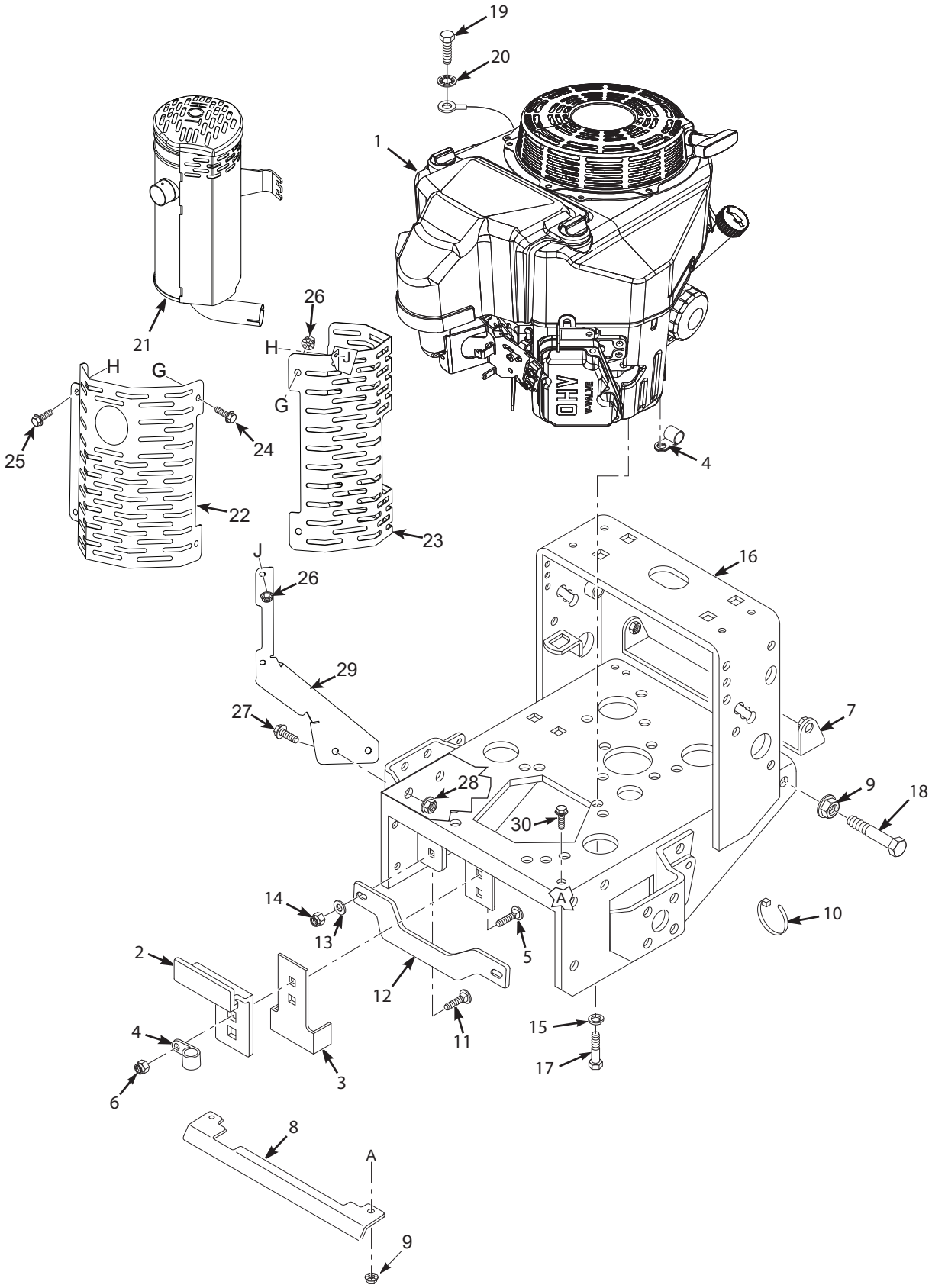

ENGINE DECK - MANUAL START

Ref. No.	Part No.	Description
1	*	Engine, Kawasaki 14FS (FS481V-FS18)
2	424620	Plate, Clutch Bracket
3	421370	Clutch Bracket
4	48030-09	Clamp
5	04003-04	Bolt, Carriage 5/16-18 x 1"
6	04021-10	Nut, 5/16-18 Elastic Stop
7	45418	Pulley Guard, 16" Small Frame
8	424661	Heatshield, 16" Small Frame
9	04019-03	Nut, 5/16-18 Serr. Flange
10	48028-05	Cable Tie
11	04003-11	Bolt, Carriage 3/8-16 x 1-1/4"
12	424002	Brace, 16" Small Frame
13	04043-04	Flatwasher, .391 x .938 x .105
14	04021-09	Nut, 3/8-16 Elastic Stop
15	04030-04	Lockwasher, 3/8"
16	462287	Engine Deck, 16" Wide w/Decals
17	04001-32	Bolt, Hex Head 3/8-16 x 1-1/4"
18	04001-17	Bolt, 5/16-18 x 2" Hex Head
19	04002-06	Bolt, Hex Head M8-1.25 x 16
20	04031-03	Lockwasher, 5/16" Ext. Tooth
21	484620	Muffler, Kawasaki FS/FX
22	4201134	Shield, Muffler Outer
23	4201133	Shield, Muffler Inner
24	04001-07	Bolt, 5/16-18 x .5" Hex Head
25	04001-08	Bolt, 5/16-18 x .75" Hex Head
26	04117-01	Lknut, 5/16-18 Elastic Stop w/Flange
27	04017-37	Bolt, 1/2-13 x 1.25" Serrated Flange HH
28	04117-04	Lknut, 1/2-13 Elastic Stop w/Flange
29	453755	Brkt, Muffler Guard Mtg.
30	04017-16	Cap Screw, 5/16-18 x .75 Serr. Flange HH

* Available through engine manufacturer.

ENGINE DECK - ELECTRIC START

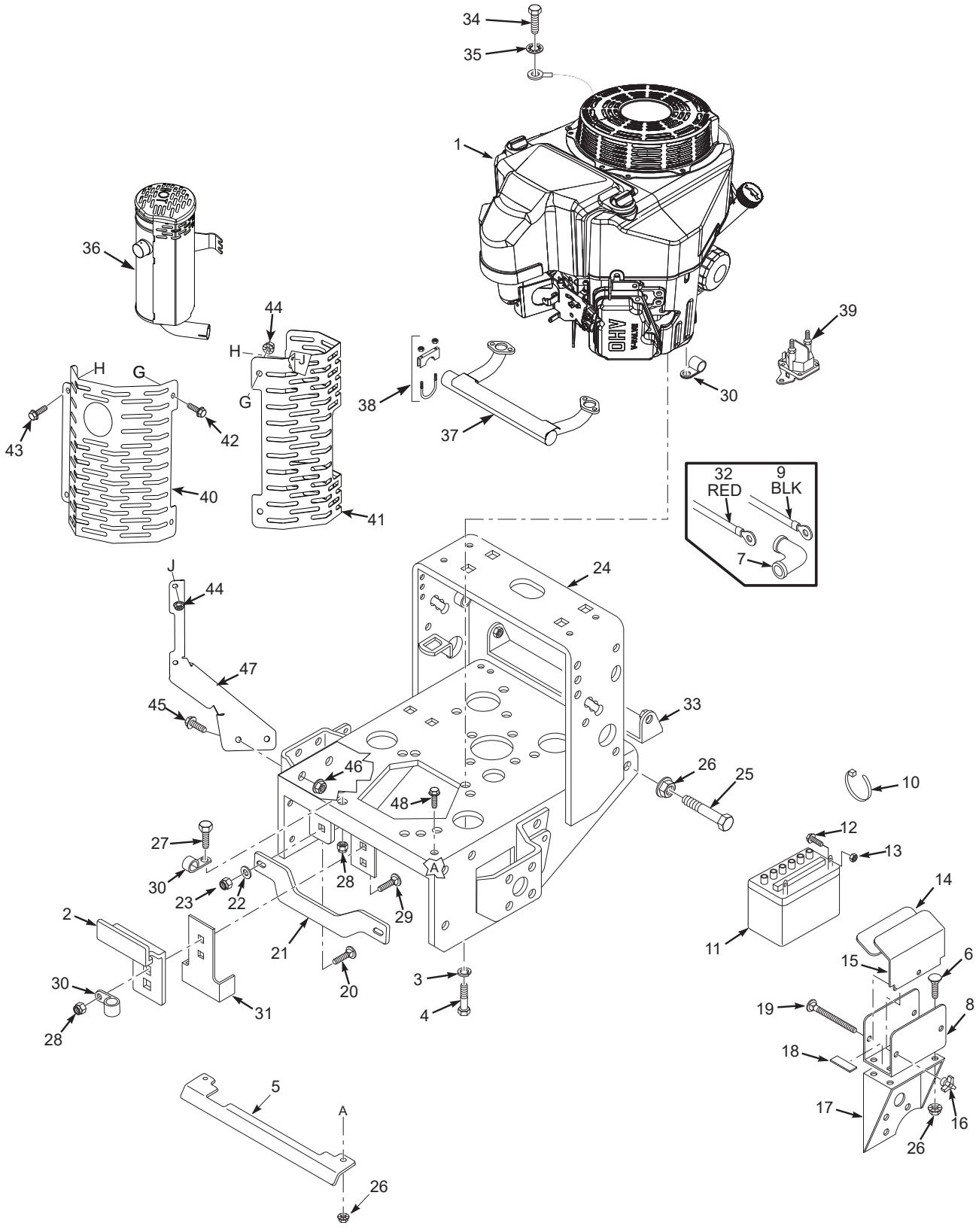

ENGINE DECK - ELECTRIC START

Ref. No.	Part No.	Description
1	*	Engine, Kawasaki FS15 (FS541V-AS41R)
	*	Engine, Kawasaki FS18 (FS600V-T12-R)
	*	Engine, Kawasaki FS22 (FS651V-DS10)
2	424620	Plate, Clutch Bracket
3	04030-04	Lock Washer 3/8"
4	04001-32	Bolt, Hex Head 3/8-16 x 1-1/4"
5	424661	Heatshield, 16" Small Frame
	424730	Heatshield, 20" Large Frame
6	04003-12	Carriage Bolt, 5/16-18 x .75"
7	48126	Rubber Boot
8	423308	Battery Box
9	48029-14	Battery Cable, 31.5" Black
10	48028-05	Cable Tie
11	**	Battery (Not Available Through Scag)
12	04001-44	Bolt, 1/4-20 x 1/2"
13	04020-02	Nut, 1/4-20
14	48099	Pad
15	42392	Battery Cover
16	04029-01	Wing Nut, 1/4-20
17	423746	Battery Support
18	48661	Pad, Rubber
19	04003-39	Bolt, 1/4-20 x 6" Carriage
20	04003-11	Carriage Bolt, 3/8-16 X 1-1/4"
21	424002	Brace, 16" Large Frame
	424009	Brace, 20" Large Frame
22	04043-04	Flat Washer .391 x .938 x .105
23	04021-09	Nut, 3/8-16 Elastic Stop
24	462287	Engine Deck, 16" Wide, w/decals
	462288	Engine Deck, 20" Wide, w/decals
25	04001-17	Bolt, 5/16-18 x 2" Hex Head
26	04019-03	Nut, 5/16-18 Serr. Flange
27	04001-08	Hex Head Bolt, 5/16-18 x .75"
28	04021-10	Nut, 5/16-18 Elastic Stop

Ref. No.	Part No.	Description
29	04003-04	Carriage Bolt, 5/16-18 x 1"
30	48030-09	Clamp
31	421370	Clutch Bracket
32	48029-13	Battery Cable, 25" Red
	48029-06	Battery Cable, 18" Red
33	45418	Pulley Guard, 16" Frame
	45419	Pulley Guard, 20" Frame
34	04002-06	Bolt, Hex Head M8-1.25 x 16
35	04031-03	Lockwasher, 5/16" Ext. Tooth
36	484620	Muffler - FS541V & FS600V
	485571	Muffler - FS651V
37	485327	Exhaust Manifold - FS541V, FS600V
	485572	Exhaust Manifold - FS651V
38	484334	Clamp, Muffler 1-1/8" Dia. - FS541V, FS600V
	481259	Clamp, Muffler 1-1/8" Dia. - FS651V
39	483278	Solenoid
40	4201134	Shield, Muffler Outer
	4201225	Shield, Muffler Outer (SWZL Only)
41	4201133	Shield, Muffler Inner
42	04001-07	Bolt, 5/16-18 x .5" Hex Head
43	04001-08	Bolt, 5/16-18 x .75" Hex Head
44	04117-01	Lknut, 5/16-18 Elastic Stop w/Flange
45	04017-37	Bolt, 1/2-13 x 1.25" Serrated Flange HH
46	04117-04	Lknut, 1/2-13 Elastic Stop w/Flange
47	453755	Brkt, Muffler Guard Mtg.
	453785	Brkt, Muffler Guard Mtg. (SWZL Only)
48	04017-16	Cap Screw, 5/16-18 x .75 Serrated Flange HH

* Available through engine manufacturer
** Not available through Scag

DRIVE AND BRAKE COMPONENTS

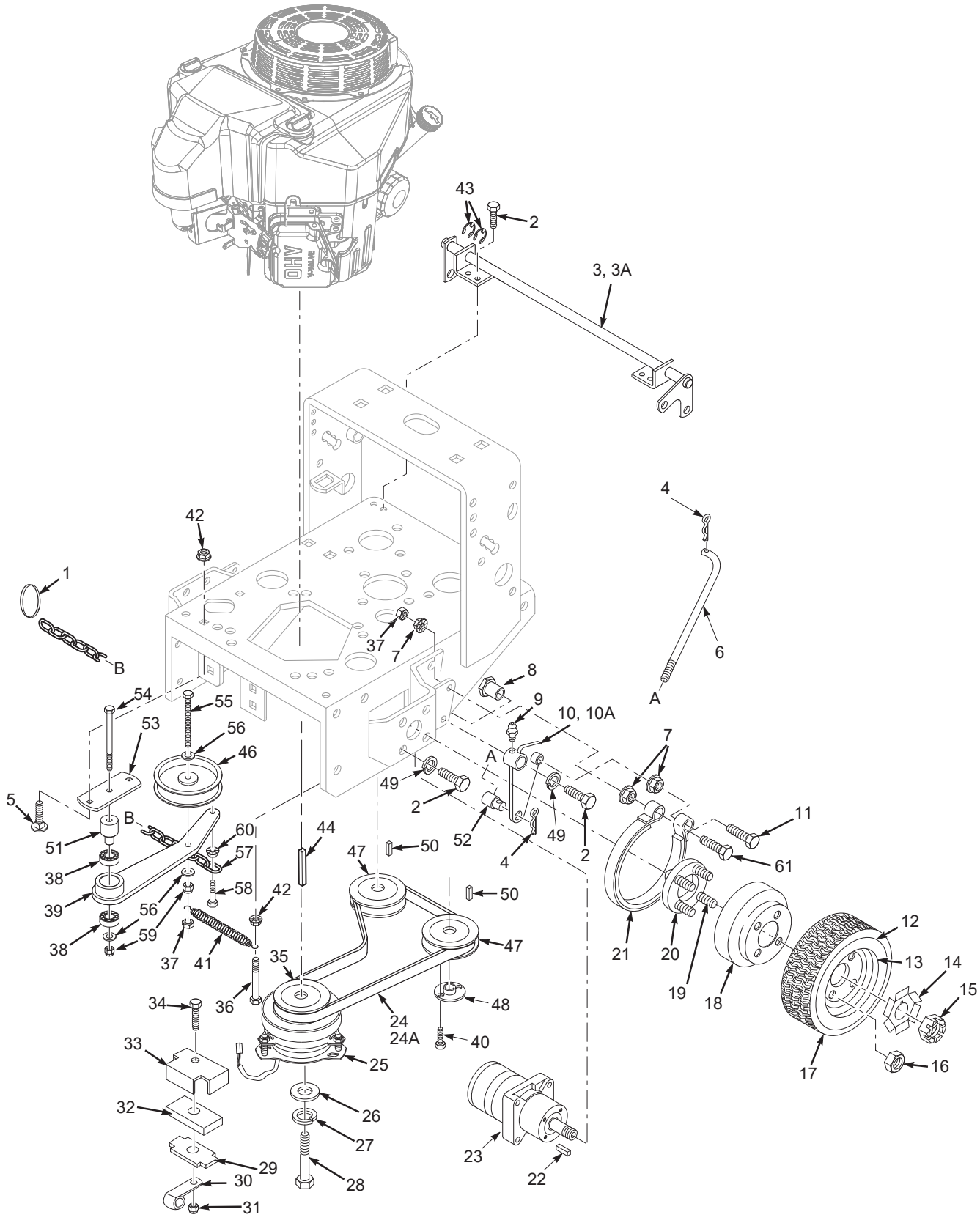

DRIVE AND BRAKE COMPONENTS

Ref. No.	Part No.	Description
1	481876	Ring, Split
2	04001-19	Bolt, 3/8-16 x 1" Hex Head
3	45842	Brake Shaft Assembly Weldment, 16" Small Frame
3A	45854	Brake Shaft Assembly Weldment, 20" Large Frame
4	04062-01	Hair Pin Cotter, .094 x 1.62
5	04003-12	Carrage Bolt, 5/16-18 x .75"
6	44126	Rod, Brake Lower
7	04019-04	Nut, 3/8-16 Serr. Flange
8	43415	Bushing, Brake
9	48114-05	Grease Fitting
10	45860	Brake Actuator Weldment-LH
10A	45861	Brake Actuator Weldment-RH
11	04001-46	Bolt, 3/8-16 x 2-1/4"
12	481618	Tire, 16 x 6.50, 4 ply
13	481890	Rim Assy
14	422214	Lock Washer, Wheel Motor
15	04027-01	Hex Castle Nut, 3/4-16 UNEF
16	04028-02	Nut, Lug
17	481502	Wheel Assy., (incl. 12,13)
18	422215	Brake Drum
19	04008-01	1/2-20 Serrated Bolt
20	46928	Hub, Wheel
21	481470	Brake Band, 7.5"
22	04063-07	Key, 3/16 X .75 Woodruff
23	481416	Wheel Motor
24	48553	Belt, Pump Drive, 16" Small Frame
24A	48587	Belt, Pump Drive, 20" Large Frame
25	461397	Electric Clutch
26	04041-28	Flat Washer .469 x 1.75 x .25
27	04030-05	Lock Washer, 7/16"
28	04102-05	Hex Head Bolt, 7/16-20 x 2-3/4"
29	422534	Plate, Backing
30	48030-09	Clamp
31	04021-10	Nut, 5/16-18 Elastic Stop
32	481716	Rubber Pad, Clutch Stop
33	422533	Retainer, Clutch Stop
34	04001-12	Hex Head Bolt, 5/16-18 x 1.75"
35	482755	Pulley, Pump Drive Engine
36	04001-77	Hex Head Bolt, 3/8-16 x 3.50"
37	04021-05	Nut, 3/8-16 Center Lock
38	48224	Ball Bearings
39	461783	Idler Arm Weldment, Pump (incl. 38)
40	04001-172	Bolt, Hex Head 1/4-20 x 1" Grd 8
41	483526	Spring, Pump Belt Idler
42	04019-03	Nut, 5/16-18 Serr. Flange
43	04050-02	Retaining Ring, 3/4" Ext. "E"
44	04063-29	Key, 1/4x1/4 x 3.75"
45	04041-07	Flat Washer, 3/8"
46	483213	Pulley, Idler 4.5"
47	482649	Pulley, Pump Shaft
48	482085	Tapered Hub
49	04030-04	Lockwasher, 3/8"
50	04063-14	Key, 5.0 x 5.0 x 25mm
51	43504	Pivot, Idler (Long)
52	43032	Swivel Joint
53	422713	Base, Idler Pivot
54	04001-54	Bolt, Hex Head 3/8-16 x 3"
55	04001-161	Bolt, Hex Head 3/8-16 x 2.75"
56	04043-04	Flatwasher 3/8"
57	481873	Chain
58	04001-59	Bolt, Hex Head 1/4-20 x 1.25"
59	04021-09	Nut, Hex Elastic Stop 3/8-16
60	04019-02	Nut, Serrated Flange 1/4-20
61	04001-151	Bolt, Hex Head 3/8-16 x 2.63"

HANDLE ASSEMBLY - RECOIL START

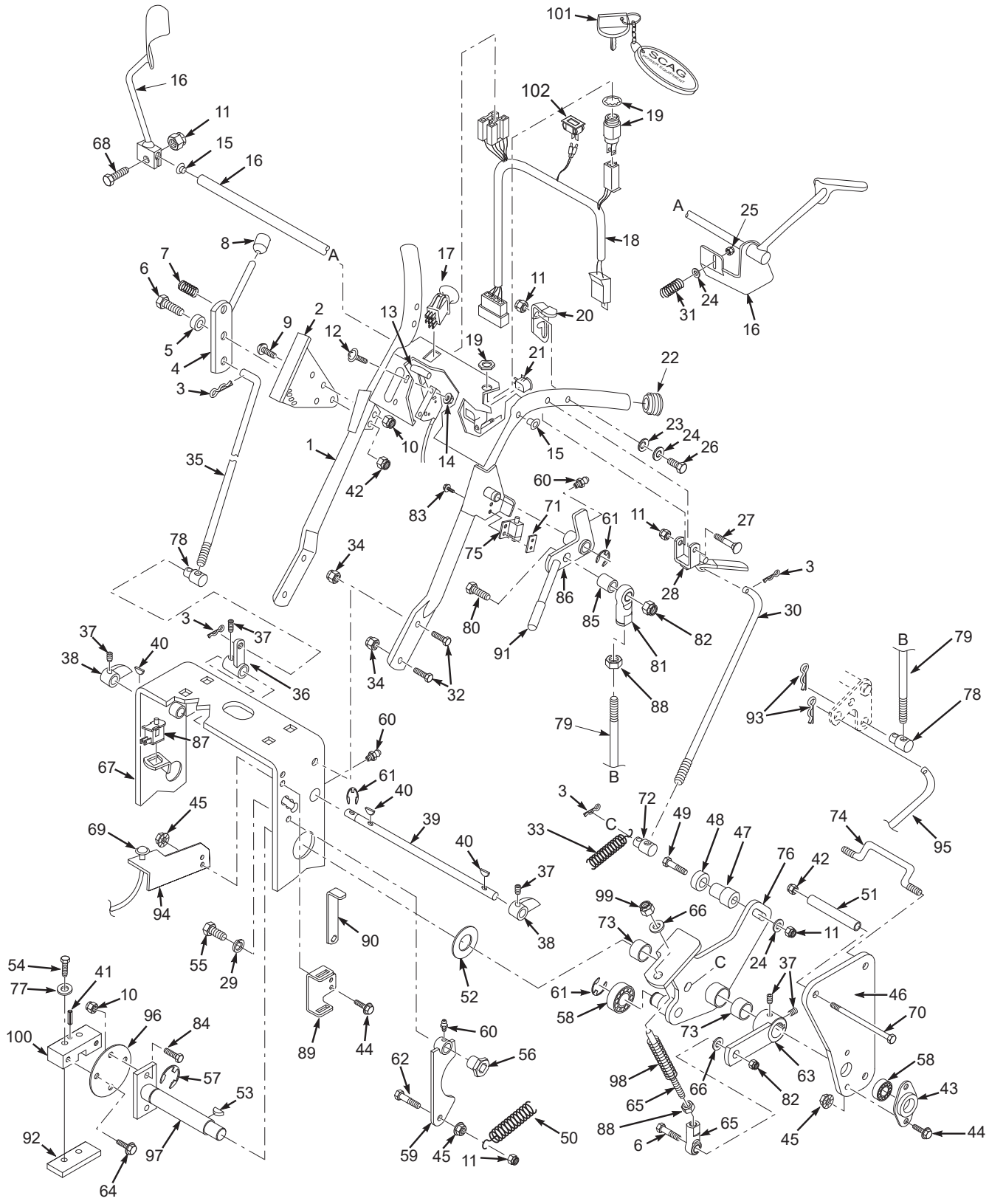

HANDLE ASSEMBLY - RECOIL START

Ref. No.	Part No.	Description
1	463098	Upper Handle Wlmt. W/Decals
2	42675	Quadrant, Speed Control
3	04062-02	Hairpin, .094 x 1.19
4	45282	Lever, Speed Adjustment
5	43086	Bushing, Speed Adjustment Lever
6	04001-20	Hex Head Bolt, 3/8-16 x 1.5"
7	48493-01	Ball Plunger
8	48092	Knob, Speed Adjustment
9	04014-01	Capscrew, 1/4-20 x 3/4" FHHS
10	04021-08	Nut, 1/4-20 Elastic Stop
11	04021-10	Nut, 5/16-18 Elastic Stop
12	04003-43	Bolt, Carriage #10-24 x 1/2”
13	48946	Throttle Control
14	04021-26	Locknut, #10-24
15	483142	Bushing
16	451917	Handle, Oper. Presence-RH
	451915	Handle, Oper. Presence-LH
17	485833	Switch, Electric Clutch Engage
18	486119	Wire Harness, Manual Start
19	48609	Key Switch, Manual Srt. (inc. Hdw)
20	422880	Neutral Latch-RH
	422879	Neutral Latch-LH
21	48717	Switch, Neutral Interlock
22	483161	Plug, Handlebar
23	04032-01	Washer, Curved Spring
24	04040-15	Flat Washer
25	04021-10	Nut, 5/16-18 Elastic Stop
26	04001-17	Hex Head Bolt, 5/16-18 x 2"
27	04001-53	Hex Hd. Bolt, 5/16-18 x 2.5"
28	483160	Lever, Steering Control
29	04030-04	Lockwasher, 3/8 Spring
30	44141	Rod, Steering Control
31	483040	Spring, Operator Presence
32	04017-27	Capscr., 3/8-16 x 1" Ser. Flange
33	483470	Spring
34	04019-04	Nut, 3/8-16 Serr. Flange
35	44142	Rod Speed Control
36	43887	Bellcrank, Speed Control
37	04012-02	Setscrew, 1/4-28 x .25"
38	46335	Cam, Speed Control (incl. 37)
39	43166	Jackshaft, Speed Control
40	04063-13	Key, 1/8 x 1/2" Woodruff
41	04060-06	Roll Pin, 3/16-.75
42	04021-10	Nut, Elastic Stop 3/8-16
43	48223	Flange, Bearing
44	04017-17	Capscrew, 5/16-18 x 1" Serr. Flg.
45	04019-03	Nut, 5/16-18 Serrated Flange
46	422795	Plate, Side
47	43536	Spacer, Neutral Bearing
48	48409	Bearing, Speed Ctrl. Bellcrank
49	04001-69	Hex Head Bolt, 5/16-18 x 1-3/4"
50	48494-02	Spring, Return
51	43522	Spacer, Side Plate
52	04041-08	Flatwasher, .766 x 1.25 x .035

Ref. No.	Part No.	Description
53	04063-07	Key, Woodruff, 3/16 x .75
54	04001-59	Bolt, Hex Head, 1/4-20 x 1.25"
55	04001-19	Bolt, Hex Head, 3/8-16 x 1"
56	43415	Bushing, Brake
57	04050-02	Clip, Retaining .750 diameter
58	48224	Bearing, Ball Neutral Return
59	46747	Cam, Neutral (incl. grease ftng.)
60	48114-05	Grease Fitting, 1/4-28 UNF
61	04050-01	Retaining Ring, 5/8"
62	04001-09	Hex Head Bolt, 5/16-18 x 1"
63	483414	Lever, Speed Control
64	04017-05	Bolt, Hex Head 1/4-20 x.75"
65	482431	Linkage Assembly
66	04041-07	Flat Wshr., 15/16 x .3906 x 12 ga
67	462287	Deck, Engine 16" Wide
68	04001-10	Hex Head Bolt, 5/16-18 x 1.25"
69	482314	Choke Control
70	04001-152	Bolt, Hex Head 3/8-16 x 4.25"
71	422373	Plate, Threaded
72	43520	Swivel Joint, Steering Rod
73	48100-06	Bushing
74	44144	Rod, Offset
75	481545	Switch, Parking Brake
76	461964	Control, LH (inc. bush. & decal)
	461965	Control, RH (inc. bush. & decal)
77	04030-02	Lockwasher, 1/4"
78	43032	Swivel Joint
79	44143	Rod, Brake Lever
80	04001-45	Hex Hd. Bolt, 3/8-16 x 2"
81	48464	Ball Joint, RH Thread
82	04021-09	Nut, 3/8-16 Elastic Stop
83	04010-12	Screw #10-32 Sltd Hex Wshr Hd
84	04001-01	Bolt, 1/4-20 x .75"
85	43286	Spacer
86	462746	Parking Brake Lever w/Grip & Grease Fitting
87	48717	Switch, Safety
88	04020-14	Nut, 3/8-24
89	423876	Mounting Bracket, Wrench
90	423875	Wrench
91	48342	Grip, Parking Brake
92	421203	Plate, Threaded
93	04062-01	Hairpin, .094 x 1.62"
94	424113	Bracket, Choke Mtg.
95	44126	Rod, Lower Brake
96	422273	Plate, Coupler
97	451113	Shaft, Pump Control
98	481879	Spring
99	04021-09	Nut, 3/8-16 Elastic Stop
100	48829	Block, Pump Control
101	462069	Key Chain with Keys
	483609	Key with Shroud
102	484565	Hourmeter

HANDLE ASSEMBLY - ELECTRIC START

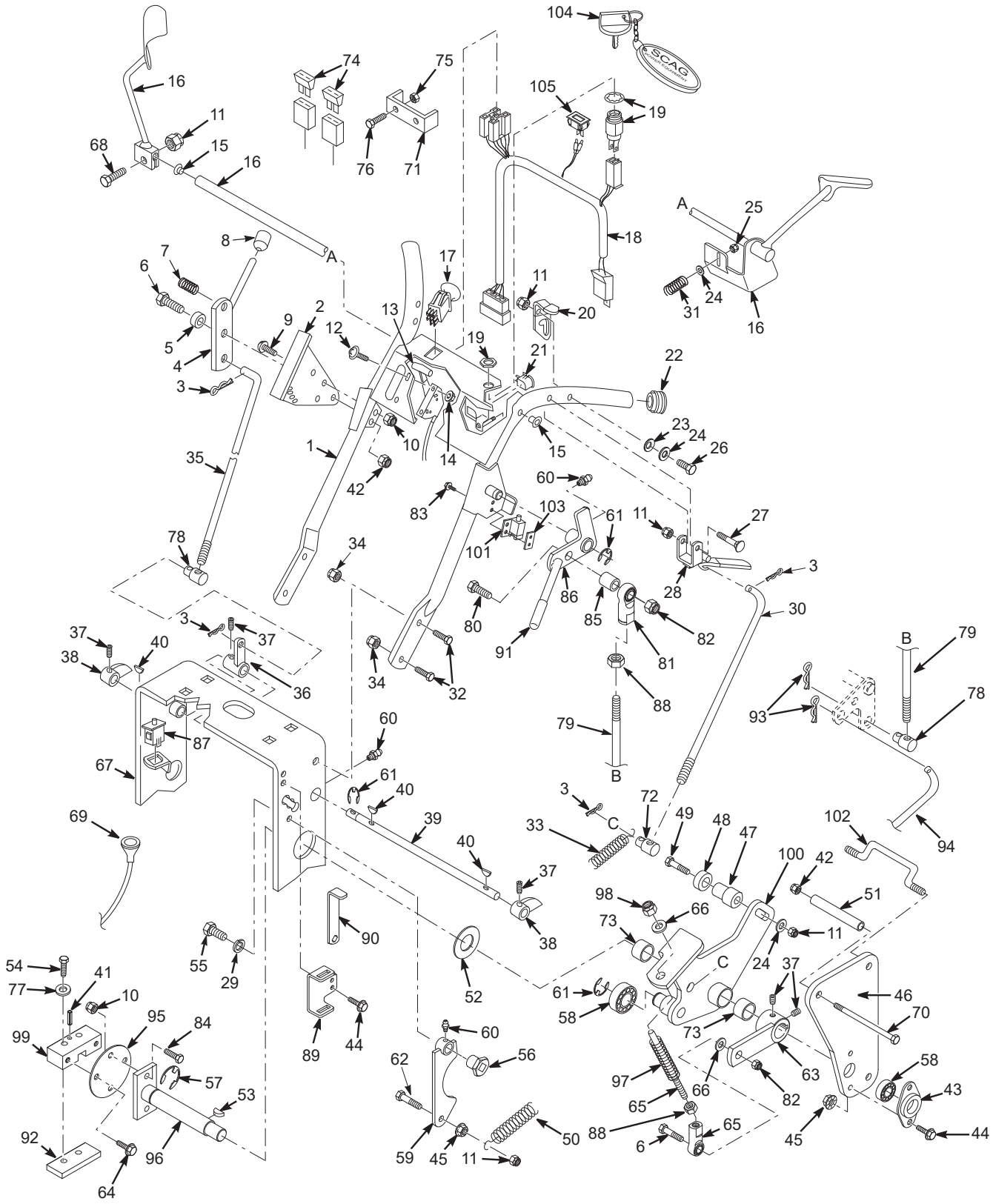

HANDLE ASSEMBLY - ELECTRIC START

Ref. No.	Part No.	Description
1	463098	Upper Handle Wlmt, 16" Wide w/Decals
	463099	Upper Handle Wlmt, 20" Wide w/Decals
2	42675	Quadrant, Speed Control
3	04062-02	Hairpin, .094 x 1.19
4	45282	Lever, Speed Adjustment
5	43086	Bushing, Speed Adjustment Lever
6	04001-20	Hex Head Bolt, 3/8-16 x 1.5"
7	48493-01	Ball Plunger
8	48092	Knob, Speed Adjustment
9	04014-01	Capscrew, 1/4-20 x 3/4" FHHS
10	04021-08	Nut, 1/4-20 Elastic Stop
11	04021-10	Nut, 5/16-18 Elastic Stop
12	04003-43	Bolt, Carriage 1/4-20 x 1/2”
13	48946	Throttle Control
14	04021-26	Lock Nut, #10-24
15	483142	Bushing
16	451917	Handle, Oper. Presence-RH
	451915	Handle, Oper. Presence-LH, 16" Frame
	451916	Handle, Oper. Presence-LH, 20" Frame
17	485833	Switch, Electric Clutch Engage
18	487329	Wire Harness, Electric Start
19	48798	Key Switch, Electric Srt. (inc. Hdw)
20	422880	Neutral Latch-RH
	422879	Neutral Latch-LH
21	48717	Switch, Neutral Interlock
22	483161	Plug, Handlebar
23	04032-01	Washer, Curved Spring
24	04040-15	Flat Washer
25	04021-10	Nut, 5/16-18 Elastic Stop
26	04001-17	Hex Head Bolt, 5/16-18 x 2"
27	04001-53	Hex Hd. Bolt, 5/16-18 x 2.5"
28	483160	Lever, Steering Control
29	04030-04	Lockwasher, 3/8 Spring
30	44141	Rod, Steering Control
31	483040	Spring, Operator Presence
32	04017-27	Capscr., 3/8-16 x 1" Ser. Flange
33	483470	Spring
34	04019-04	Nut, 3/8-16 Serr. Flange
35	44142	Rod Speed Control
36	43887	Bellcrank, Speed Control
37	04012-0	Setscrew, 1/4-28 x .25"
38	46335	Cam, Speed Control (incl. 37)
39	43166	Jackshaft, Speed Control, 16" Frame
	43155	Jackshaft, Speed Control, 20" Frame
40	04063-13	Key, 1/8 x 1/2" Woodruff
41	04060-06	Roll Pin, 3/16-.75
42	04021-10	Nut, Elastic Stop 3/8-16
43	48223	Flange, Bearing
44	04017-17	Capscrew, 5/16-18 x 1" Serr. Flg.
45	04019-03	Nut, 5/16-18 Serrated Flange
46	422795	Plate, Side
47	43536	Spacer, Neutral Bearing
48	48409	Bearing, Speed Ctrl. Bellcrank
49	04001-69	Hex Head Bolt, 5/16-18 x 1-3/4"
50	48494-02	Spring, Return
51	43522	Spacer, Side Plate
52	04041-08	Flatwasher, .766 x 1.25 x .035

Ref. No.	Part No.	Description
53	04063-07	Key, Woodruff, 3/16 x .75
54	04001-59	Bolt, Hex Head, 1/4-20 x 1.25"
55	04001-19	Bolt, Hex Head, 3/8-16 x 1"
56	43415	Bushing, Brake
57	04050-02	Clip, Retaining .750 diameter
58	48224	Bearing, Ball Neutral Return
59	46747	Cam, Neutral (incl. grease ftng.)
60	48114-05	Grease Fitting, 1/4-28 UNF
61	04050-01	Retaining Ring, 5/8"
62	04001-09	Hex Head Bolt, 5/16-18 x 1"
63	483414	Lever, Speed Control
64	04017-05	Bolt, Hex Head 1/4-20 x.75"
65	482431	Linkage Assembly
66	04041-07	Flat Wshr., 15/16 x .3906 x 12 ga
67	462287	Deck, Engine 16" Wide
	462288	Deck, Engine 20" Wide
68	04001-10	Hex Head Bolt, 5/16-18 x 1.25"
69	482314	Choke Control
70	04001-152	Bolt, Hex Head 3/8-16 x 4.25"
71	42413	Bracket, Fuse Holder - 22FSE
72	43520	Swivel Joint, Steering Rod
73	48100-06	Bushing
74	48298	Blade Fuse, 20A
75	04021-01	Nut, #10-32 Elastic Stop - 2FSE
76	04010-03	Screw, #10-32 x 1.5" Phillips - 22FSE
77	04030-02	Lockwasher, 1/4"
78	43032	Swivel Joint
79	44143	Rod, Brake Lever
80	04001-45	Hex Hd. Bolt, 3/8-16 x 2"
81	48464	Ball Joint, RH Thread
82	04021-09	Nut, 3/8-16 Elastic Stop
83	04010-12	Screw #10-32 Sltd Hex Wshr Hd
84	04001-01	Bolt, 1/4-20 x .75"
85	43286	Spacer
86	462746	Parking Brake Lever w/Grip & Grease Fitting
87	487327	Switch, Safety
88	04020-14	Nut, 3/8-24
89	423876	Mounting Bracket, Wrench
90	423875	Wrench
91	48342	Grip, Parking Brake
92	421203	Plate, Threaded
93	04062-01	Hairpin, .094 x 1.62"
94	44126	Rod, Lower Brake
95	422273	Plate, Coupler
96	451113	Shaft, Pump Control
97	481879	Spring
98	04021-09	Nut, 3/8-16 Elastic Stop
99	48829	Block, Pump Control
100	461964	Control, LH (inc. bush. & decal)
	461965	Control, RH (inc. bush. & decal)
101	481545	Switch, Parking Brake
102	44144	Rod, Offset
103	422373	Plate, Threaded
104	462069	Key Chain with Keys
	483609	Key with Shroud
105	484565	Hourmeter

SWZ FUEL SYSTEM

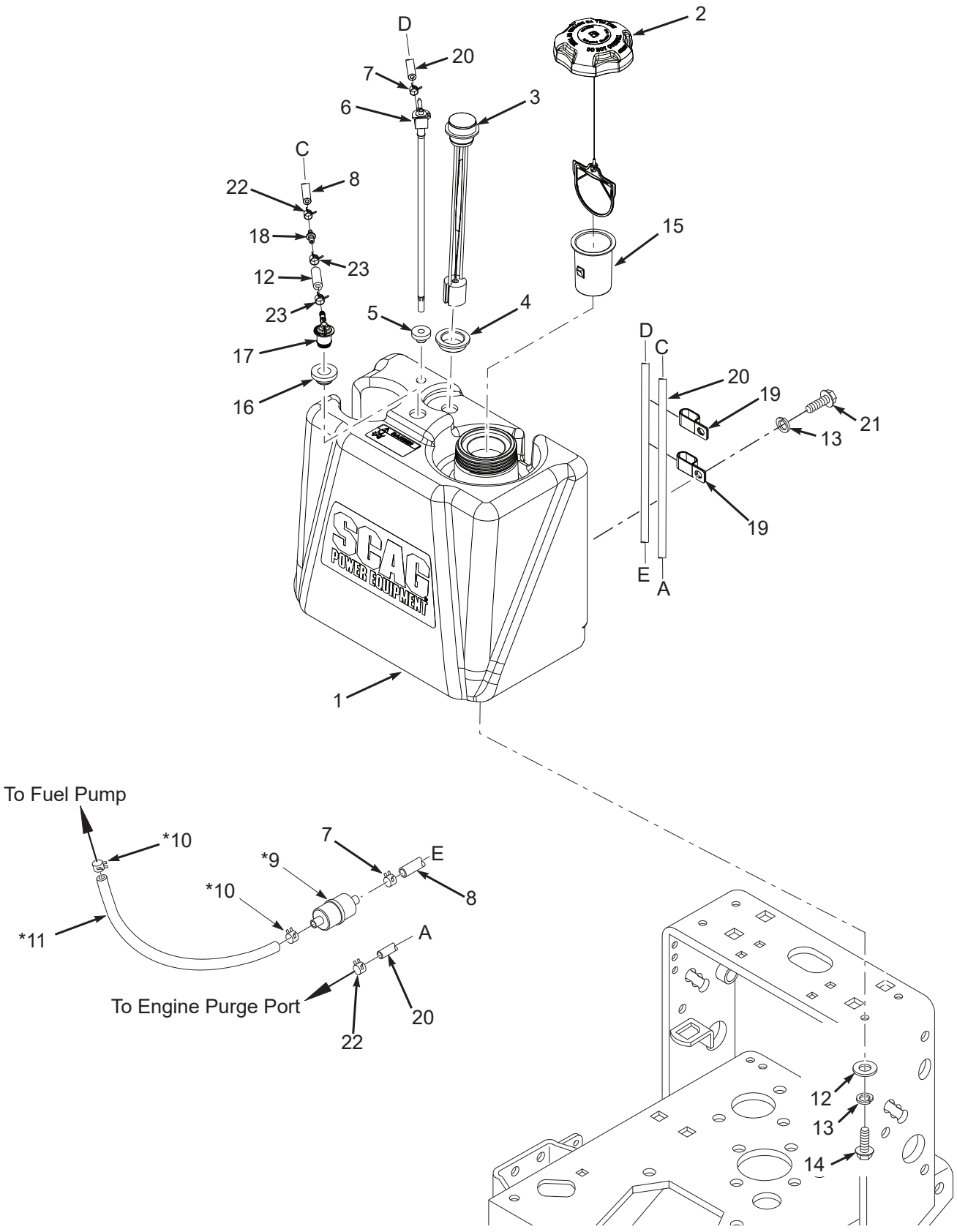

SWZ FUEL SYSTEM

Ref. No.	Part No.	Description
1	463282	Fuel Tank Assembly (incl. #3, 4, 5, 6, 16, 17)
2	484286	Fuel Cap w/ Tether
	484297	Fuel Cap w/Tethered - California Models Only (not shown)
3	484243	Fuel Gauge Assembly (incl. #4)
4	484242	Seal, Fuel Gauge
5	482571	Bushing, .56 Dia. Viton
6	486181	Valve, Fuel Shutoff w/Screen
7	48059-01	Clamp, Fuel Hose
8	483617	Fuel Hose, 1/4" ID (order by inch)
9	*	Fuel Filter
10	*	Clamp, Fuel Hose
11	*	Fuel Hose
12	484347	Hose, Vapor Recovery 1/4" (order by inch)
13	04030-03	Lockwasher, 5/16" Spring
14	04001-09	Bolt, Hex Head 5/16-18 x 1"
15	484279-01	Tube, Fuel Tank Insert - 4"
16	484285	Grommet, Viton,
17	484333	Fitting, Remote Vent
18	484343-01	Mender, 1/4 x 3/16 w/.02 Hole
19	48030-11	Clamp, 5/8" Double
20	484345	Hose, Vapor Recovery 3/16" (order by inch)
21	04001-08	Bolt, Hex Head 5/16-18 x 3/4"
22	48059-05	Clamp, Vapor Recovery Hose 3/16"
23	48059-02	Clamp, Fuel Hose 7/32" ID

* = Available through engine manufacturer only.

HYDRAULIC ASSEMBLY

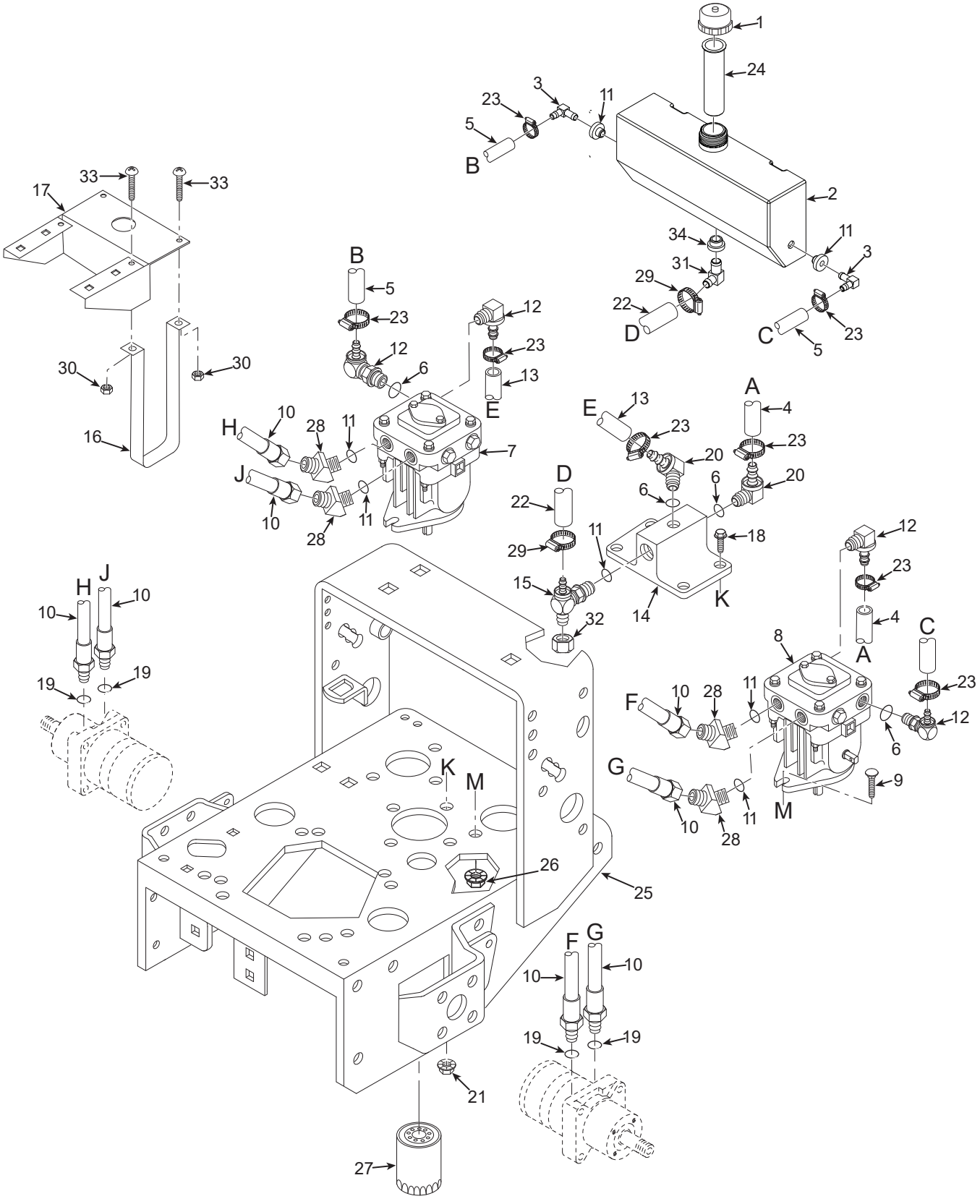

HYDRAULIC ASSEMBLY

Ref. No.	Part No.	Description
1	481164	Cap, Oil Reservoir
2	462773	Oil Reservoir (With Fittings)
3	482572	Fitting, 90 Degree - 3/8" Hose
4	48811	Hose, 3/8" ID - 10-1/4" Long (Order By The Inch)
5	48811	Hose, 3/8" ID - 7" Long (Order By The Inch)
6	48603-06	O-Ring
7	483097	Pump, PG-1JQQ-DY1X-XXXX (R.H.)
8	483098	Pump, PG-1GQQ-DY1X-XXXX (L.H.)
9	04003-11	Bolt, Carriage, 3/8-16 x 1.25"
10	481265	Hose, Pump to Wheel Motor
11	482571	Bushing, .56 Dia. Viton
12	482266-03	Elbow, 7/16-20 O-Ring x 3/8" Hose
13	48811	Hose, 3/8" ID - 11" Long (Order By The Inch)
14	482417	Oil Filter Base
15	482477	Tee, 3/8 O-Ring x JIC x 1/2" Hose
16	422794	Strap, Hydraulic Tank
17	422793	Bracket, Hydraulic Tank
18	04017-16	Capscrew, 5/16-18 x .75" Serr. Flange
19	48603-04	O-Ring
20	482266-01	Elbow, 9/16 O-Ring x 3/8" Hose
21	04019-03	Nut, 5/16-18 Serr. Flange
22	482305	Hose, Formed 1/2" ID
23	48136-13	Clamp, .69 max dia.
24	481507	Tube, Filler Neck
25	462287	Engine Deck (16" Wide) with Decals - Small Frame
	462288	Engine Deck (20" Wide) with Decals - Large Frame
26	04019-04	Nut, 3/8-16 Serr. Flange
27	48462-01	Oil Filter
28	48485-01	Elbow, 45 Deg.-3/4-16 JIC Male x Male 3/4-16 O-Ring
29	48136-05	Clamp, .87 max di.
30	04021-08	Nut, 1/4-20
31	482574	Fitting, 90 Degree - 1/2" Hose
32	48571-02	Cap, 3/4-16
33	04010-10	Screw, 1/4-20 x 2.0" Round Head Phillips
34	482573	Bushing, .78 Dia. Viton

HYDRAULIC PUMP ASSEMBLY

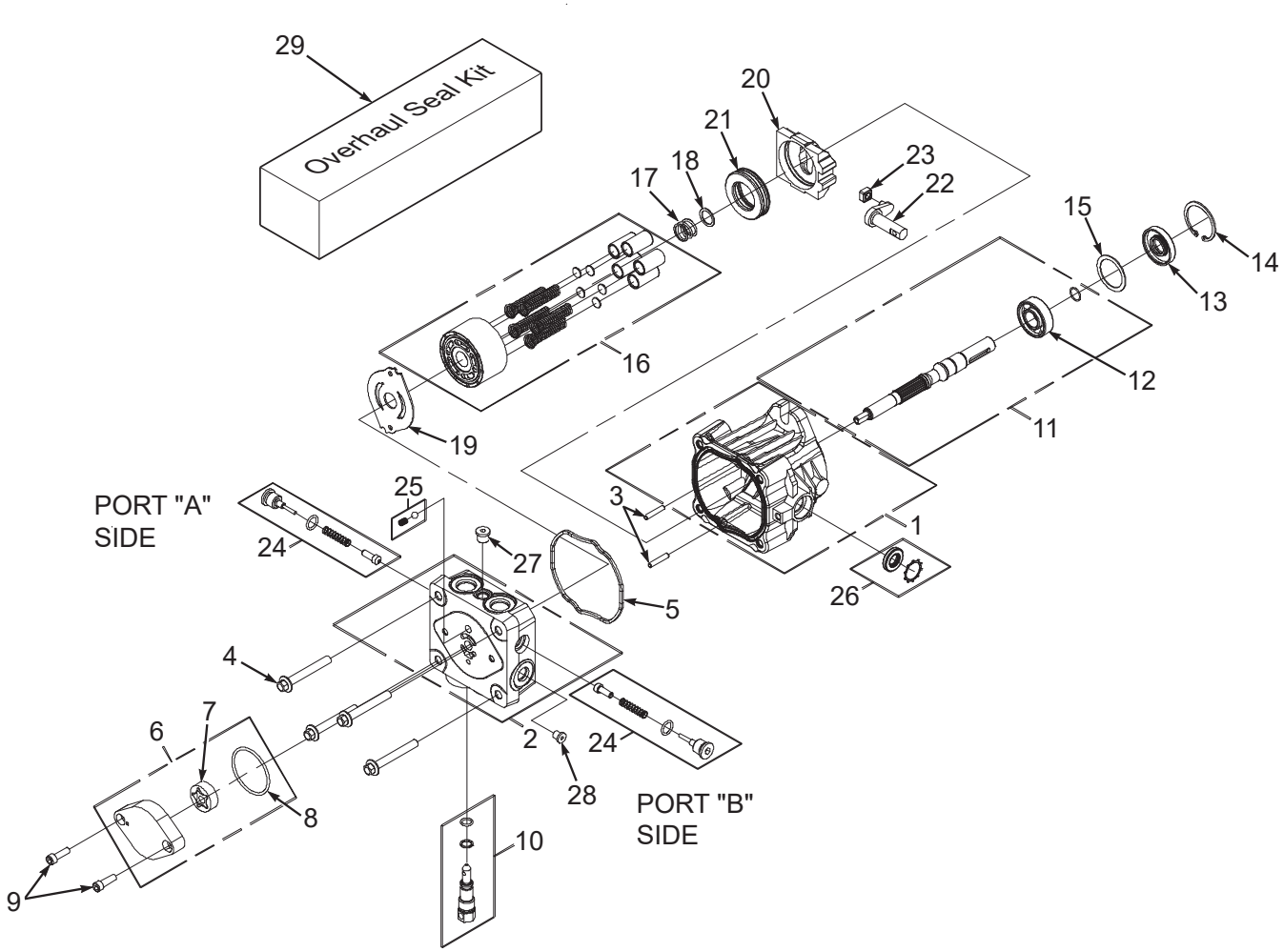

HYDRAULIC PUMP ASSEMBLY

Ref. No.	Part No.	Description
1	HG 70516	Housing Kit
2	HG 70517	End Cap Kit
3	HG 50641	Straight Headless Pin
4	HG 50969	Hex Flange Bolt, M8-1.25 x 60mm
5	HG 52629	Housing O-Ring
6	HG 2513027	Charge Pump Kit
7	HG 50273	Gerotor Assembly
8	HG 9004101-1340	O-Ring
9	HG 50095	Socket Head Screw, M6 x 1.0-20mm
10	HG 2513030	Bypass Valve Kit
11	HG 70521	Pumpshaft Kit
12	HG 50315	Ball Bearing, 17 x 40 x 12
13	HG 51161	Lip Seal
14	HG 50329	Retaining Ring
15	HG 50951	Spacer
16	HG 70331	Cylinder Block Kit
17	HG 2003014	Block Spring
18	HG 2003017	Block Thrust Washer
19	HG 51444	Valve Plate
20	HG 2003087	Swash Plate
21	HG 50551	Ball Thrust Bearing
22	HG 2003005	Trunnion Arm
23	HG 2000015	Slot Guide
24	HG 2510062	Check Valve Kit (.024” Orfice) port “A” on Left Hand Pump, port “B” on Right Hand Pump
25	HG 70403	Charge Relief Kit
26	HG 2513043	Trunnion Seal with Retainer
27	HG 9005110-4400	Straight Thread Plug
28	HG 50408	Straight Headless Pin
29	HG 70525	Overhaul Seal Kit

WIRE HARNESSES

ENGINE DECK WIRE HARNESS
PART NO. 484302

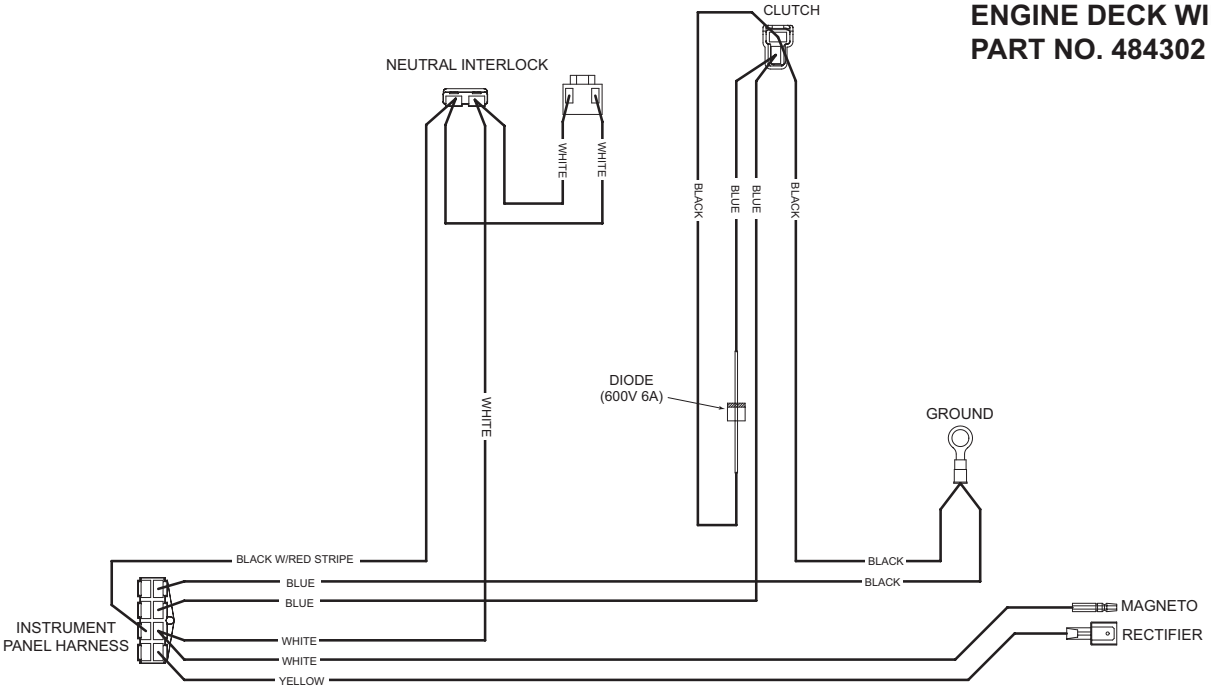

HANDLE WIRE HARNESS - MANUAL START
PART NO. 486119

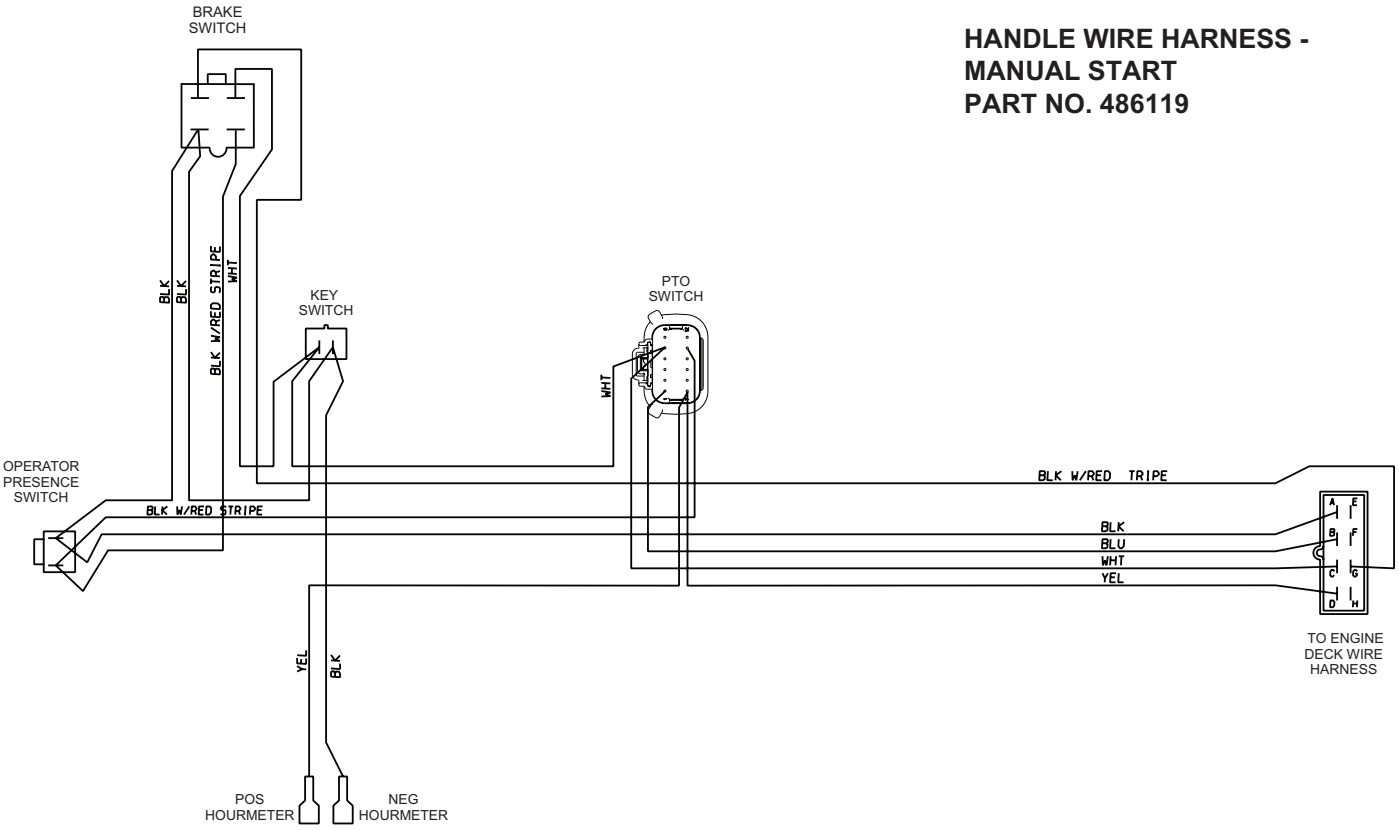

WIRE HARNESSES

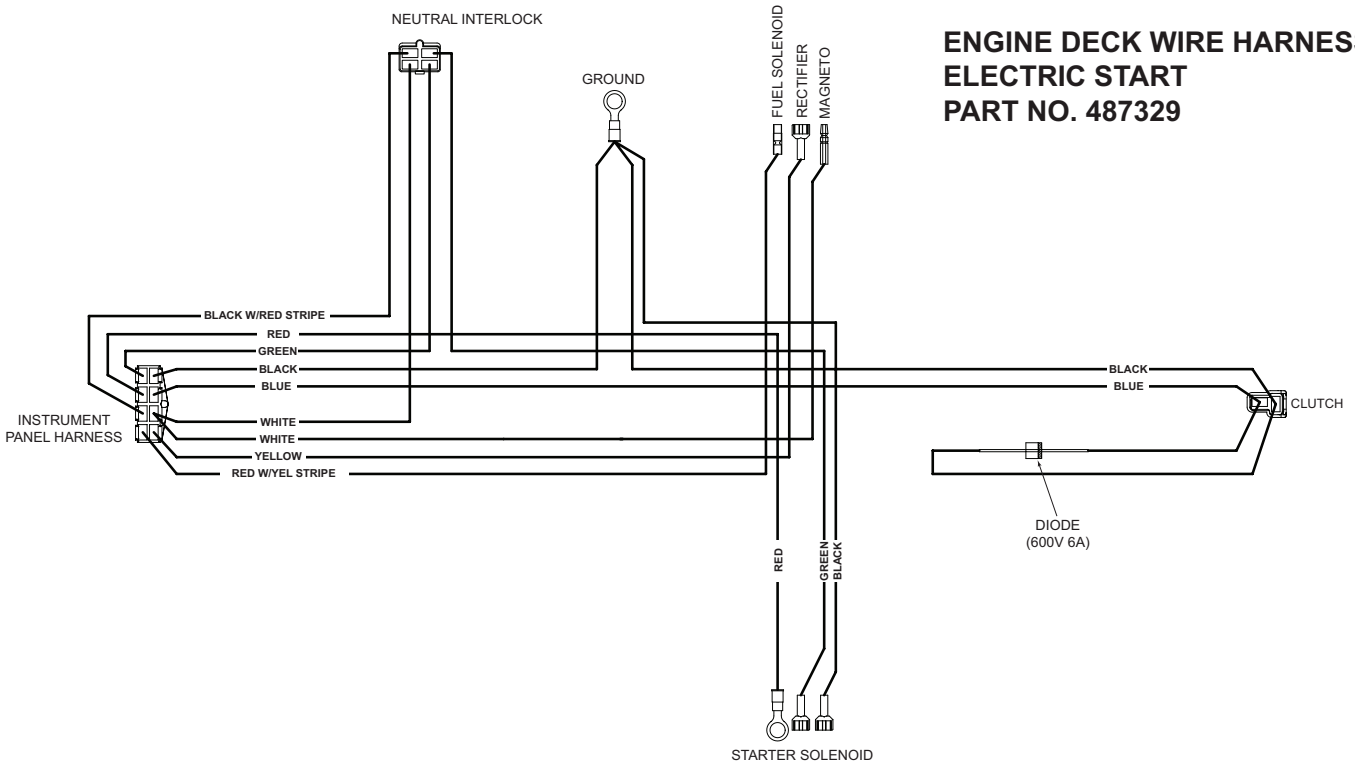

ENGINE DECK WIRE HARNESS
ELECTRIC START
PART NO. 487329

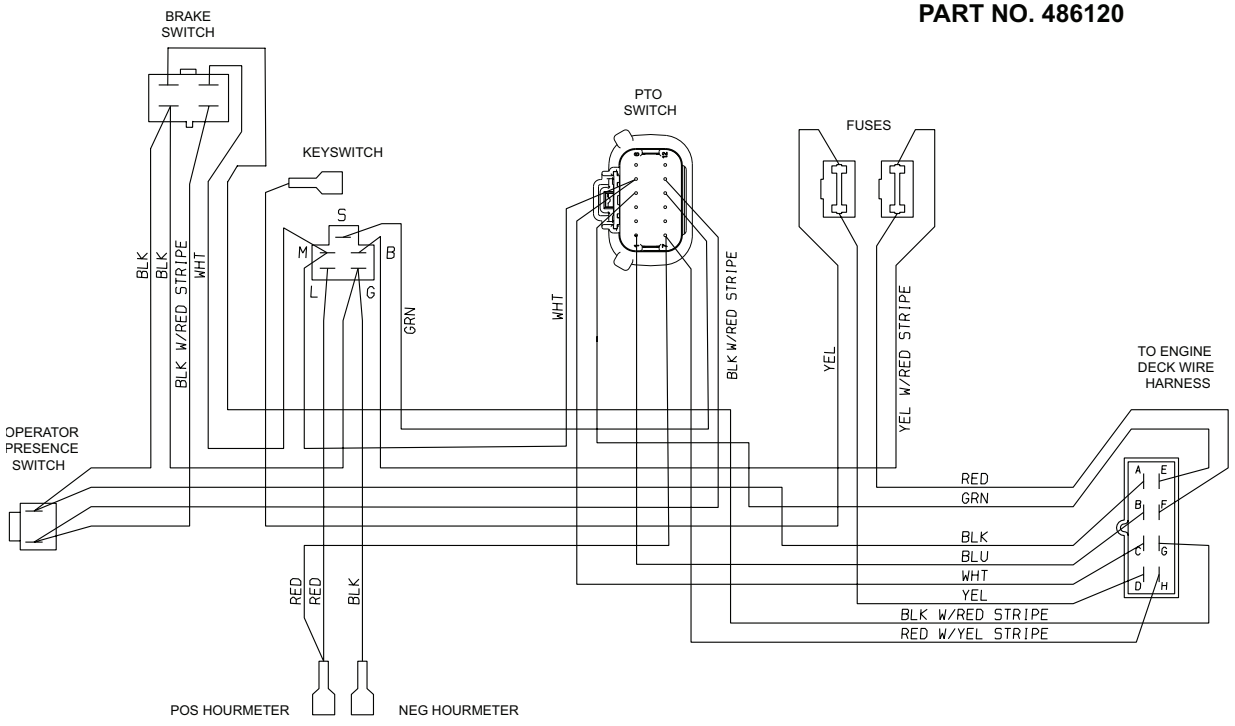

HANDLE WIRING HARNESS
KAWASAKI ELECTRIC START
PART NO. 486120

SWZ ELECTRICAL SCHEMATIC - RECOIL START

(shown with Key off, PTO Off, Speed Control Lever in Neutral, OPC Disengaged)

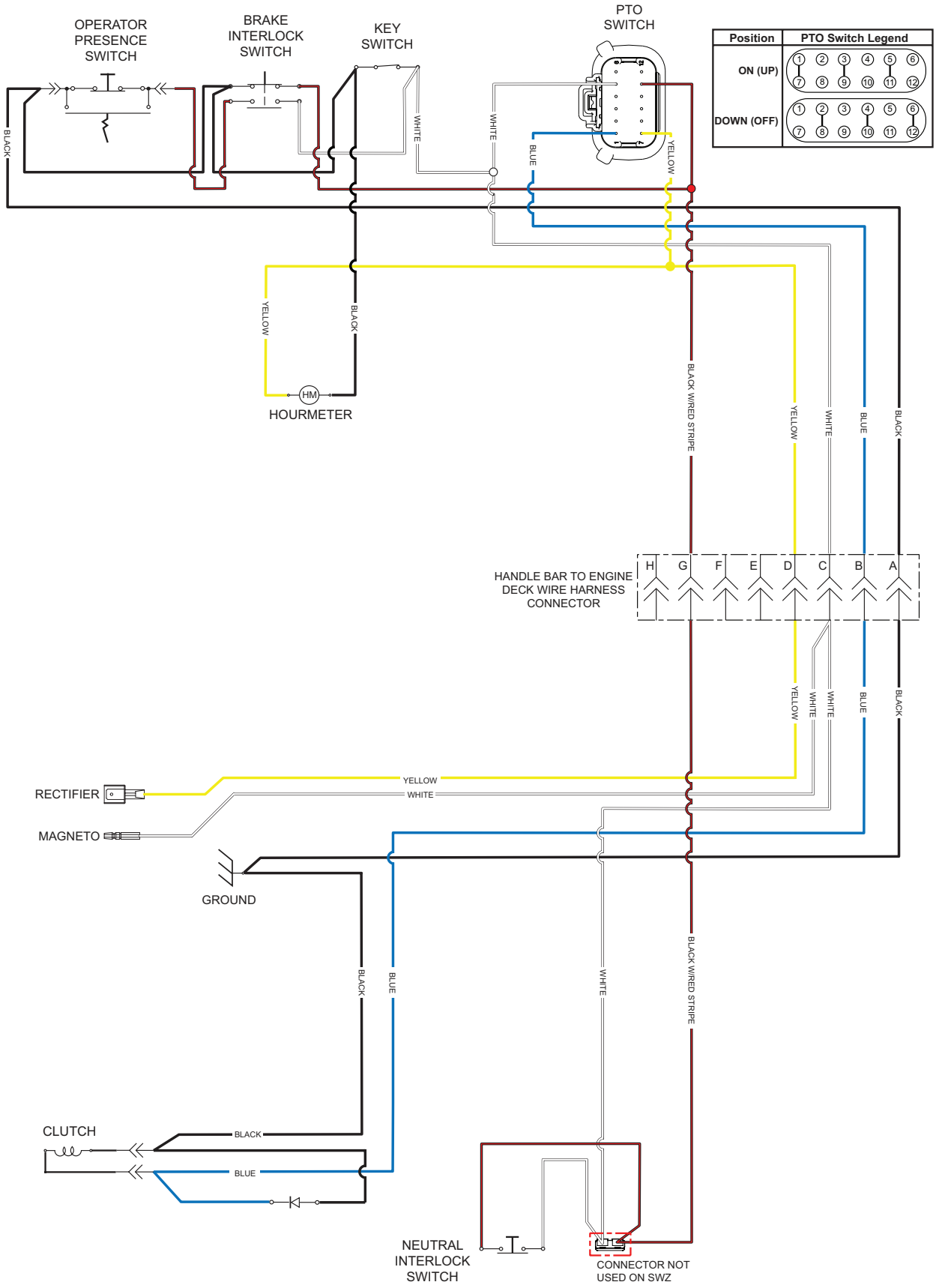

SWZ ELECTRICAL SCHEMATIC - ELECTRIC START

(shown with Key off, PTO Off, Speed Control Lever in Neutral, OPC Disengaged)

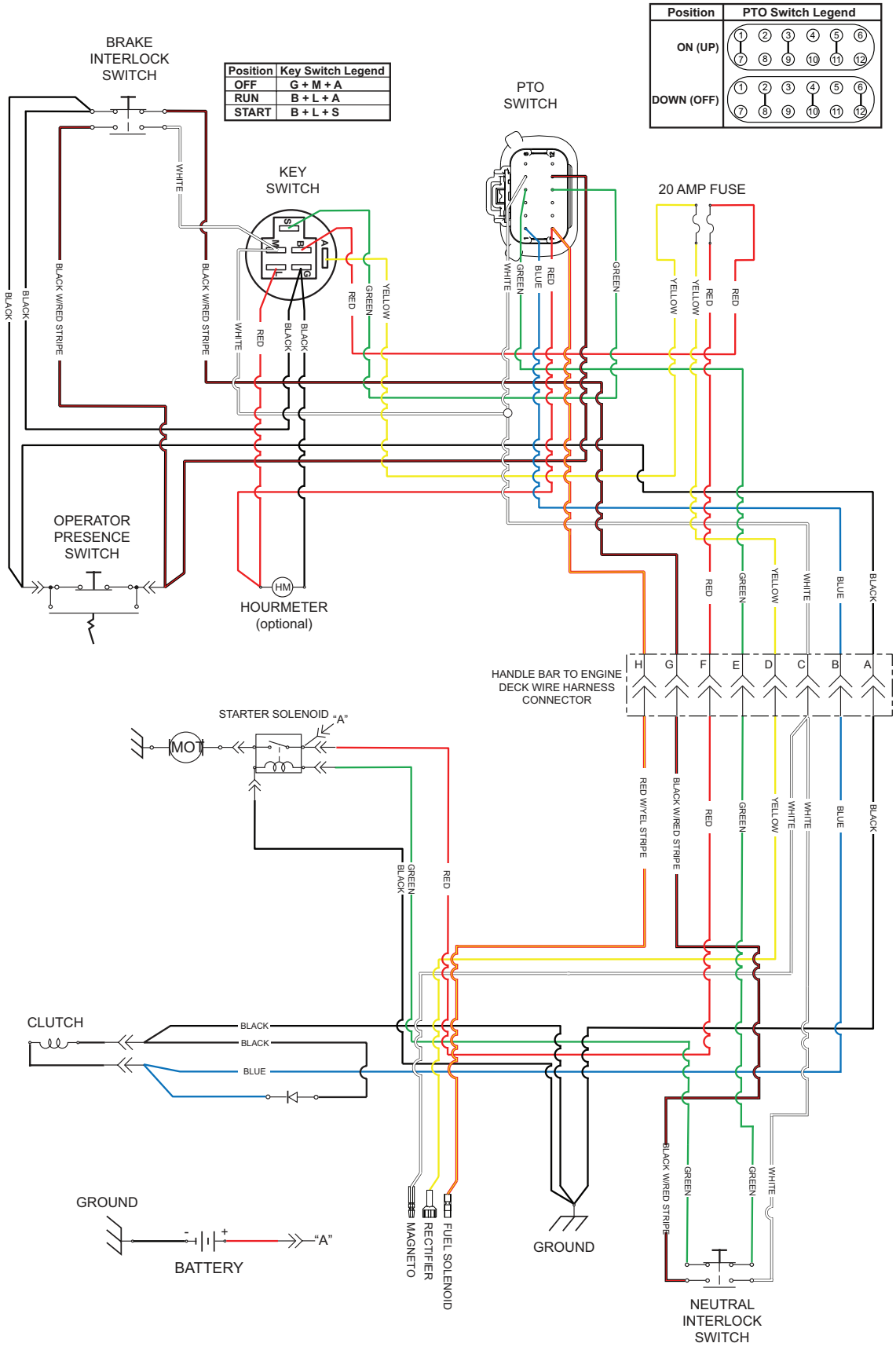

REPLACEMENT DECALS

WARNING

DO NOT OPERATE WITHOUT DISCHARGE CHUTE, MULCHING KIT, OR ENTIRE GRASS CATCHER INSTALLED

1

SCAG

2

DANGER

SPINNING BLADES

KEEP CLEAR

BLADE CONTACT & THROWN OBJECTS CAN INJURE

3

WARNING

ROTATING BLADES AND BELTS

* Keep hands, feet & clothing clear
* Keep all guards in place
* Shut off engine & disengage blade clutch before servicing
* Use caution in directing discharge
* Read instruction manual before operating

DO NOT OPERATE UNLESS GRASS CATCHER, MULCHING KIT OR DISCHARGE CHUTE IS INSTALLED

4

482816

CUTTING HEIGHT ADJUSTMENT

DECK MOUNTING HOLE POSITION

NUMBER OF CASTER SPACERS (BELOW SUPPORT)

		NUMBER OF SPACERS ABOVE CUTTER BLADES					
		0	1	2	3	4	5
TOP	0	-	-	2-3/8	2-1/8	1-7/8	1-5/8
MIDDLE	0	-	-	2-5/8	2-3/8	2-1/8	1-7/8
MIDDLE	1	-	-	2-3/4	2-1/2	2-1/4	2
BOTTOM	2	-	-	-	-	2-7/8	2-5/8
BOTTOM	3	-	4	3-3/4	3-1/2	3-1/4	3
BOTTOM	4	4-3/8	4-1/8	3-7/8	3-5/8	3-3/8	3-1/8

5

SCAG POWER EQUIPMENT
MAYVILLE
WEST BEND
BEAVER DAM, WI
USA
ISO 9001 Registered
METALCRAFT OF MAYVILLE

6

SCAG POWER EQUIPMENT

WARNING

BEFORE OPERATING

Read operator's manual
Solicite etiquetas en espanol a un distribuidor Scag
Make sure guards, shields & safety devices are in place & working
Clear area of children, bystanders & debris
Mow across face of slopes
Trained operators only

MOWER DECK
PULL OUT TO ENGAGE

PUSH IN TO DISENGAGE

ON
OFF

486117

7

MOUNT RIDING ATTACHMENT HERE

WARNING

FALLING HAZARD
USE ONLY SCAG APPROVED RIDING ATTACHMENTS
SEE OPERATOR'S MANUAL

8

WARNING

INSTALL BELT COVER BEFORE OPERATING MACHINE

READ OPERATOR'S MANUAL

9

SCAG Zero-Turn

10

REPLACEMENT DECALS

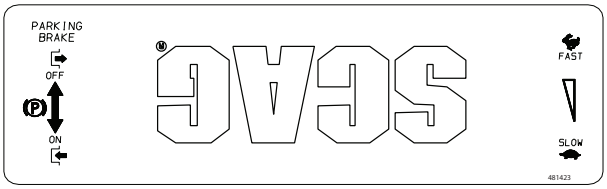

11

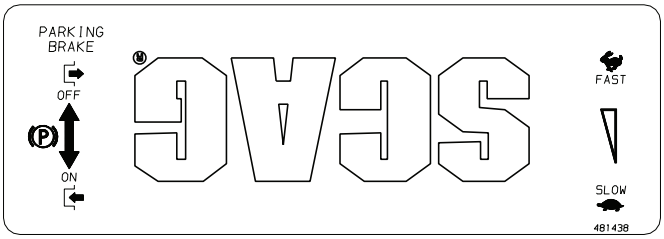

12



13

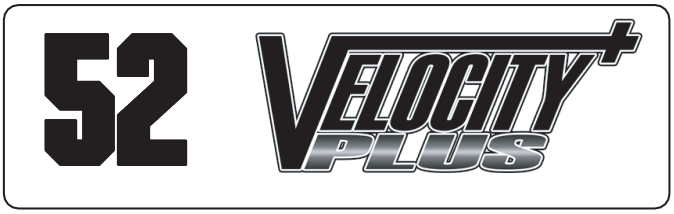

14



15

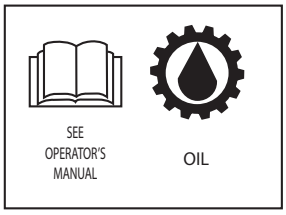

16



19

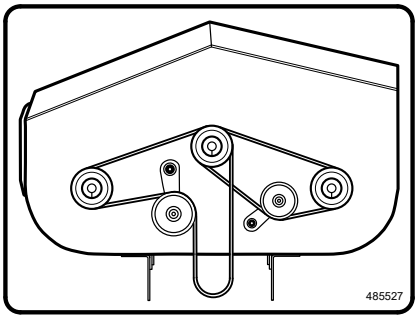

17

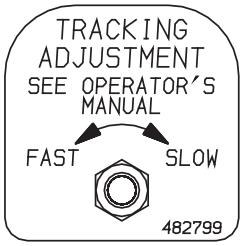

18

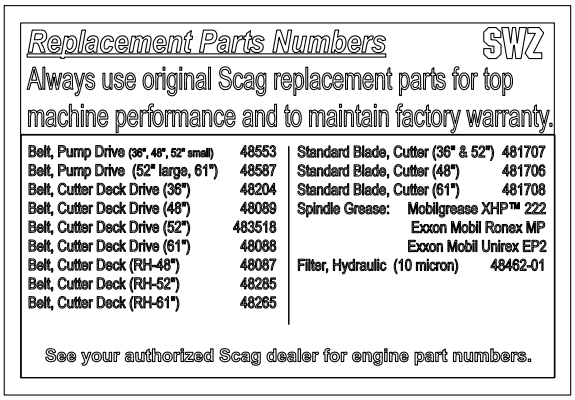

20



21

REPLACEMENT DECALS

Ref. No.	Part No.	Description
1	483405	Decal, Discharge Chute
2	48314	Decal, Scag Logo
3	483505	Decal, Danger-Spinning Blades
4	483406	Decal, Warning-Rotating Blades
5	482816	Decal, Height of Cut
6	485403	Decal, Metalcraft - USA
7	487212	Decal, Belt Cover
8	483404	Decal, Sulky Attachment
9	486117	Decal, Instrument Panel - Rear
10	481942	Decal, Scag Zero Turn
11	481423	Decal, Instrument Panel - Front (SWZ-18FS & SWZ-22FSE only)
12	481483	Decal, Instrument Panel - Front
13	482297	Decal, 36 Advantage
14	483199	Decal, 48 Velocity Plus
	483200	Decal, 52 Velocity Plus
	483201	Decal, 61 Velocity Plus
15	481971	Decal, Heavy Duty Commercial
16	481425	Decal, Oil
17	485526	Decal, Belt Routing - 36A
	485527	Decal, Belt Routing - 48V, 52V & 61V
18	482799	Decal, Tracking Adjustment
19	481124	Decal, Speed Control
20	485369	Decal, SWZ Replacement Parts
**	461986	Spanish Decal Kit, Walk-Behinds (Not Shown)
**	483900	Decal, Warning Spark Arrest (Not Shown) - California Models Only
21	486136	Decal. Scag Logo - Fuel Tank

LIMITED WARRANTY - COMMERCIAL EQUIPMENT

Any part of the Scag commercial mower manufactured by Scag Power Equipment and found, in the reasonable judgment of Scag, to be defective in materials or workmanship, will be repaired or replaced by an Authorized Scag Service Dealer without charge for parts and labor during the periods specified below. This warranty is limited to the original purchaser provided the product was purchased from an Authorized Scag Power Equipment Dealer and is not transferable. Proof of purchase will be required by the dealer to substantiate any warranty claims. All warranty work must be performed by an Authorized Scag Service Dealer.

This warranty is limited to the following specified periods from the date of the original retail purchase for defects in materials or workmanship:

- Wear items including drive belts, blades, hydraulic hoses and tires are warranted for ninety (90) days.
- Batteries are covered for ninety (90) days.
- Frame and structural components including oil reservoir and oil coolers are warranted for two (2) years (parts and labor) for commercial use or three (3) years / 500 hours (whichever comes first) (parts and labor) for non-commercial use.
- Cutter decks are warranted against cracking for a period of three (3) years. (parts and labor 1st and 2nd year; parts only 3rd year.) The repair or replacement of the cutter deck will be at the option of Scag Power Equipment. We reserve the right to request components for evaluation. This warranty does not cover any mower that has been subject to misuse, neglect, negligence, or accident, or that has been operated in any way contrary to the operating instructions as specified in the Operator's Manual.
- Engines and electric starters are covered by the engine manufacturer's warranty period.
- Major drive system components are warranted for two (2) years (parts and labor) for commercial use or three (3) year / 500 hour (whichever comes first) (parts and labor) for non-commercial use by Scag Power Equipment. (commercial and non-commercial warranty excludes fittings, hoses, drive belts). The repair or replacement of the hydraulic pump or hydraulic motor will be at the option of Scag Power Equipment. This warranty does not cover any mower that has been subject to misuse, neglect, negligence, or accident, or that has been operated in any way contrary to the operating instructions as specified in the Operator's Manual.
- Electric clutches have a Limited Warranty for two (2) years (parts and labor) for commercial use or three (3) year / 500 hours (whichever comes first) (parts and labor) for non-commercial use.
- Spindle assemblies have a Limited Warranty for three years (parts and labor 1st year and 2nd; parts only 3rd year).
- Any Scag product used for rental purposes is covered by a 90 day warranty.

The Scag mower, including any defective part must be returned to an Authorized Scag Service Dealer within the warranty period. The expense of delivering the mower to the dealer for warranty work and the expense of returning it to the owner after repair will be paid for by the owner. Scag's responsibility is limited to making the required repairs and no claim of breach of warranty shall be cause for cancellation or rescission of the contract of sale of any Scag mower. "Non-Commercial" use is defined as a single property owner, where the single property is the residence of the owner of the mower. If the mower is cutting more than the owners single property, it is deemed commercial use and the "non-commercial" warranty does not apply. Scag Power Equipment reserves the right to deny and / or void the non-commercial warranty if it believes it to be in commercial use.

This warranty does not cover any mower that has been subject to misuse, neglect, negligence, or accident, or that has been operated in any way contrary to the operating instructions as specified in the Operator's Manual. The warranty does not apply to any damage to the mower that is the result of improper maintenance, or to any mower or parts that have not been assembled or installed as specified in the Operator's Manual and Assembly Manual. The warranty does not cover any mower that has been altered or modified, changing performance or durability. In addition, the warranty does not extend to repairs made necessary by normal wear, or by the use of parts or accessories which, in the reasonable judgment of Scag, are either incompatible with the Scag mower or adversely affect its operation, performance or durability.

Scag Power Equipment reserves the right to change or improve the design of any mower without assuming any obligation to modify any mower previously manufactured. All other implied warranties are limited in duration to the two (2) year for commercial use, three (3) years / 500 hour for non-commercial use or ninety (90) days for mowers used for rental purpose. Accordingly, any such implied warranties including merchantability, fitness for a particular purpose, or otherwise, are disclaimed in their entirety after the expiration of the appropriate two year, three year / 500 hour or ninety day warranty period. Scag's obligation under this warranty is strictly and exclusively limited to the repair or replacement of defective parts and Scag does not assume or authorize anyone to assume for them any other obligation. Some states do not allow limitations on how long an implied warranty lasts, so the above limitation may not apply to you.

Scag assumes no responsibility for incidental, consequential or other damages including, but not limited to, expense for gasoline, expense of delivering the mower to an Authorized Scag Service Dealer and expense of returning it to the owner, mechanic's travel time, telephone or telegram charges, rental of a like product during the time warranty repairs are being performed, travel, loss or damage to personal property, loss of revenue, loss of use of the mower, loss of time or inconvenience. Some states do not allow the exclusion or limitation of incidental or consequential damages, so the above limitation or exclusion may not apply to you. This warranty gives you specific legal rights, and you may also have other rights which vary from state to state.



Scag Power Equipment Headquarters
1000 Metalcraft Drive
Mayville, Wisconsin 53050
1.920.644.8100

Mailing Information
PO Box 152
Mayville, Wisconsin 53050

© 2027
Scag Power Equipment
Division of Metalcraft of Mayville, Inc.