SCAG POWER EQUIPMENT

OPERATOR'S MANUAL

SW
Walk-Behind



© 2027
Scag Power Equipment
Division of Metalcraft of Mayville, Inc.

PART NO. 03602
PRINTED 10/2026
PRINTED IN USA

Congratulations on owning a Scag mower! This manual contains the operating instructions, safety information, and illustrated parts list for your machine. Reading this manual can provide you with assistance in maintenance and adjustment procedures to keep your machine performing at maximum efficiency. Please read all the information enclosed in this manual before operating your machine.

The QR code on the front cover of this manual can be scanned with your mobile device to access manuals, parts lists, and other product information on the official Scag website.

This manual covers the operating instructions and illustrated parts list for:		
SW-32-14FS	**with a serial number of**	**036D00001 to 036D99999**
SW-36A-14FS	**with a serial number of**	**037D00001 to 037D99999**
SW-48V-14FS	**with a serial number of**	**038D00001 to 038D99999**
SW-52V-15FS	**with a serial number of**	**039D00001 to 039D99999**
Always use the entire serial number listed on the serial number tag when referring to this product.		

Model Number:	**Serial Number:**

Please use the table provided above to record the model number and serial number located on your machine for future reference.

⚠ WARNING

YOUR MACHINE IS ONLY AS SAFE AS THE OPERATOR. HAZARD CONTROL AND ACCIDENT PREVENTION ARE DEPENDENT UPON THE AWARENESS, CONCERN, PRUDENCE, AND PROPER TRAINING OF THE PERSONNEL INVOLVED IN THE OPERATION, TRANSPORT, MAINTENANCE, AND STORAGE OF THE EQUIPMENT.

- **Carefully read and understand the safety and operating instructions described in this manual. Always keep a copy of this manual with the machine.**
- **Ensure every operator is properly trained and thoroughly familiar with all controls and procedures before operating the machine.**
- **Always follow OSHA-approved operating procedures when operating the machine.**
- **Keep all shields, guards, and plates in place when operating the machine. Do not remove the grass discharge chute while the machine is running.**
- **Stay two machine widths away from slopes, drop-offs, ditches, embankments, retaining walls, water, or other obstacles.**
- **Do not mow on wet grass. Wet grass reduces traction and steering control.**
- **Keep hands, feet, and clothing away from moving parts at all times.**
- **Do not carry passengers on the machine.**
- **Do not operate the machine when children or bystanders are present.**
- **If a mechanism becomes clogged during operation, stop the engine before cleaning.**
- **Before performing any maintenance or service, stop the machine and remove the ignition key.**

⚠ WARNING

CALIFORNIA PROPOSITION 65

The engine exhaust produced by this machine contains chemicals known to the State of California to cause cancer, birth defects, or other reproductive harm.

Battery posts, terminals, and related accessories for this machine contain lead and lead compounds, chemicals known to the State of California to cause cancer, birth defects, or other reproductive harm. Wash hands after handling components.

The use of this machine may expose the operator to chemicals known to the State of California to cause cancer, birth defects, or other reproductive harm.

NOTES

PAGE LEFT INTENTIONALLY BLANK

Table of Contents

SECTION 1 - INTRODUCTION 1
1.1 GENERAL INFORMATION 1
1.2 MANUAL CONVENTIONS 1
DIRECTIONAL REFERENCES 1
SAFETY ALERTS 1
1.3 SERVICING YOUR MACHINE 2
AUTHORIZED SCAG DEALERS 2
ENGINE AND DRIVETRAIN COMPONENTS 2
ATTACHMENTS AND ACCESSORIES 2
1.4 SYMBOLS 3

SECTION 2 - SAFETY INFORMATION 4
2.1 INTRODUCTION 4
2.2 BEFORE OPERATION SAFETY 4
GENERAL CONSIDERATIONS 4
PROTECTING CHILDREN 5
FUEL & FLUID SAFETY 5
SAFETY INTERLOCK SYSTEM 6
POWER TAKE-OFF (PTO) SYSTEM 6
2.3 DURING OPERATION SAFETY 7
GENERAL CONSIDERATIONS 7
SLOPE OPERATION 8
2.4 AFTER OPERATION SAFETY 8
GENERAL CONSIDERATIONS 8
MAINTENANCE SAFETY 8
STORAGE & TRANSPORTATION SAFETY 9
2.5 SPARK IGNITION SYSTEM 9
2.6 USE OF A SPARK ARRESTOR 9
2.7 SAFETY AND INSTRUCTIONAL DECAL DETAILS 10

SECTION 3 - SPECIFICATIONS 11
3.1 ENGINE 11
3.2 ELECTRICAL 11
3.3 DRIVE SYSTEM 11
3.4 CUTTER DECK 12
3.5 WEIGHTS AND DIMENSIONS 12
3.6 PRODUCTIVITY 12

SECTION 4 - OPERATING INSTRUCTIONS 13
4.1 CONTROLS & INSTRUMENT IDENTIFICATION 13
4.2 SAFETY INTERLOCK SYSTEM 14
4.3 TESTING THE SAFETY INTERLOCK SYSTEM 14
4.4 INITIAL RUN-IN PROCEDURES 14
4.5 STARTING THE ENGINE 14

4.6 GROUND TRAVEL AND STEERING 15
4.7 ENGAGING THE DECK DRIVE (CUTTER BLADES) 16
4.8 HILLSIDE OPERATION 16
4.9 PARKING THE MOWER 16
4.10 AFTER OPERATION 16
4.11 REMOVING CLOGGED MATERIAL 17
4.12 MOVING MOWER WITH ENGINE STOPPED 17
4.13 RECOMMENDATIONS FOR MOWING 17

SECTION 5 - TROUBLESHOOTING CUTTING CONDITIONS 18

SECTION 6 - ADJUSTMENTS 21
6.1 DRIVE CONTROL ADJUSTMENTS 21
6.2 THROTTLE CONTROL AND CHOKE ADJUSTMENTS 21
6.3 CUTTER DECK BELT ADJUSTMENTS 21
6.4 BELT ALIGNMENT 22
6.5 ADJUSTING CUTTING HEIGHT 22
6.6 ELECTRIC CLUTCH ADJUSTMENT 25

SECTION 7 - MAINTENANCE 26
7.1 MAINTENANCE CHART - RECOMMENDED SERVICE INTERVALS 26
7.2 LUBRICATION 27
7.3 ENGINE OIL 29
7.4 ENGINE FUEL SYSTEM 29
7.5 ENGINE AIR CLEANER 30
7.6 CUTTER BLADES 30
7.7 TIRES 31

SECTION 8 - ILLUSTRATED PARTS LIST 33
SCAG APPROVED ATTACHMENTS AND ACCESSORIES. 33
32" & 36A CUTTER DECKS 35
48V & 52V CUTTER DECKS 37
CASTER ASSEMBLY 39
ENGINE DECK 41
HANDLE ASSEMBLY 43
SW FUEL SYSTEM 45
INSTRUMENT PANEL 47
PEERLESS TRANSMISSION 700-070 49
WIRE HARNESSES 50
SW ELECTRICAL SCHEMATIC - RECOIL START 51
REPLACEMENT DECALS AND INFORMATION PLATES 53

LIMITED WARRANTY - COMMERCIAL EQUIPMENT ..... INSIDE BACK COVER

INTRODUCTION

1.1 GENERAL INFORMATION

Your Scag mower was built to the highest standards in the industry. However, the prolonged life and maximum efficiency of your machine depend on you following the operating, adjustment, and maintenance instructions in this manual.

Carefully read the safety and operating instructions in this manual before attempting to operate your machine. You are responsible for the safe and proper operation of your machine.

IMPORTANT

For illustrative clarity, some graphics in this manual may show shields, guards, or covers removed from the machine. Under no circumstances should your machine be operated without these devices secured in place.

All information in this manual is based on product information available at the time of approval for printing. Scag Power Equipment reserves the right to make changes to this manual at any time without notice and without incurring any obligation. **Please visit the official Scag Power Equipment website (www.scag.com) for updated manual releases.**

A replacement manual is available from the following sources: your Authorized Scag Dealer, the Scag Power Equipment Service Department (PO Box 152; Mayville, WI 53050), and on the official Scag Power Equipment website (www.scag.com). When requesting a replacement manual, please indicate the complete model number and serial number listed on your Scag Power Equipment product.

If additional information or service is needed for your machine, please contact your Authorized Scag Dealer.

1.2 MANUAL CONVENTIONS

DIRECTIONAL REFERENCES

Directional references are used throughout this manual to locate the features of your machine. The "Right," "Left," "Front," and "Rear" of the machine are referenced from the perspective of the operator while standing in the operating position and facing the forward travel direction.

SAFETY ALERTS



The symbol above means, **"Attention! Become alert! Your safety is involved!"** This symbol is used with the following safety alerts to communicate important safety precautions, safe operating practices, and dangerous hazards. Carefully read all safety alerts associated with your machine to avoid injury and possible death. Be sure to understand all potential hazards and causes of injury or death before attempting to operate your machine.

⚠ DANGER

"DANGER" denotes an extremely hazardous situation on or near the machine. If not avoided, this hazard will result in serious injury or death.

⚠ WARNING

"WARNING" denotes a hazardous situation on or near the machine. If not avoided, this hazard could result in serious injury or death.

⚠ CAUTION

"CAUTION" denotes a hazardous situation on or near the machine. If not avoided, this hazard may result in minor to moderate injury.

1.3 SERVICING YOUR MACHINE

AUTHORIZED SCAG DEALERS

We encourage you to contact your Authorized Scag Dealer for any repairs to your machine. All Scag Power Equipment dealers are informed of the latest methods to service your equipment and carry a full line of Scag replacement parts. Their services are efficient, both in the field and at their service shops.

When ordering replacement parts for your machine, always provide the complete model number and serial number listed on your machine. The serial number plate is located on the frame of the machine near the engine and the transmission. See Figure 1-1.

IMPORTANT

The use of parts other than Scag replacement parts will void the warranty on your machine. Unauthorized replacement parts may adversely affect the performance, durability, or safety of your machine.

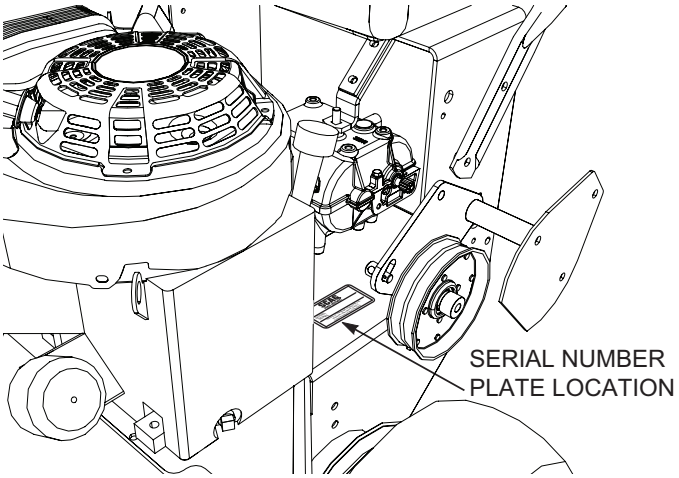

Figure 1-1. Serial Number Plate Location

ENGINE AND DRIVETRAIN COMPONENTS

The detailed servicing and repair procedures for the engine and drivetrain of your machine are not covered in this manual. For service of these components during the limited warranty period, please contact your Authorized Scag Dealer or locate an authorized servicing agent of the component manufacturer. **Any unauthorized work completed on these components during the limited warranty period may void your warranty.**

ATTACHMENTS AND ACCESSORIES

Attachments and accessories manufactured by companies other than Scag Power Equipment or Metalcraft of Mayville must be approved for use on your machine by Scag Power Equipment. Any alterations or modifications made to your machine that change the performance, durability, or allow the use of unapproved attachments and accessories will not be covered by the limited warranty. See Section 8 for more information.

1.4 SYMBOLS

SYMBOL	DESCRIPTION	SYMBOL	DESCRIPTION
	Read Operator's Manual		CE Mark
	Parking Brake	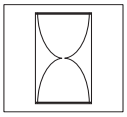	Hour Meter / Elapsed Operating Hours
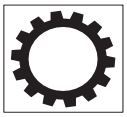	Transmission	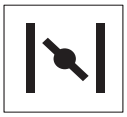	Choke
	Continuously Variable – Linear		Oil
	ON / START		OFF / STOP
	Fast	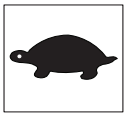	Slow
	Spring Tension on Idler		Cutting Element – Basic Symbol
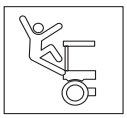	Falling Hazard	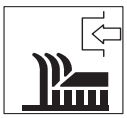	Cutting Element – Engage
	Pinch Point	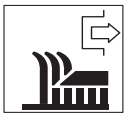	Cutting Element – Disengage
	Thrown Object Hazard		Keep Bystanders Away
	Crush Hazard		Spinning Blade Hazard

SAFETY INFORMATION

2.1 INTRODUCTION

Your Scag mower is only as safe as the operator. Hazard control and accident prevention are dependent upon the awareness, prudence, and proper training of the personnel involved in the operation, maintenance, transportation, and storage of your machine.

Ensure every operator is properly trained and thoroughly familiar with all controls, operating practices, and safety precautions before operating your machine. The owner and operator can prevent, and will be responsible for, accidents or injuries occurring to themselves, other people, or property.

NOTE

Ensure all personnel involved in the operation of your machine know where this manual is stored. Keep a record of each employee that has read this manual.

Scan the QR code below with your mobile device to access the "Safe Operations Videos" web page on the official Scag Power Equipment website. Carefully watch all relevant safety videos before attempting to operate your machine.

Figure 2-1. Safety Video QR Code

2.2 BEFORE OPERATION SAFETY

GENERAL CONSIDERATIONS

1. Clear the operating area of all objects that could interfere with the operation of the machine. These objects may be picked up and thrown by the cutter blades when mowing if not removed.
2. Ensure all operators and mechanics working with the machine are appropriately trained and understand the procedures outlined in this manual. The owner of the machine is responsible for training all operators working with their machine.
3. Do not operate the machine when children or bystanders are present. Turn off the machine if any children or bystanders enter the operating area.
4. Never allow children or untrained personnel to operate the machine.
5. Do not carry passengers on the machine.
6. Wear adequate protective equipment while operating the machine. Avoid loose clothing, jewelry, or long hair that could get tangled in moving parts. Wearing safety glasses, slip-resistant safety shoes, and a helmet is advisable and required by some local ordinances and insurance regulations.

⚠ WARNING

Prolonged periods of exposure while operating this machine may cause hearing loss. Always wear hearing protection while operating the machine.

7. Keep the machine in a good operating condition. Keep all shields, safety devices, and decals in place. If a shield, safety device, or decal is damaged or defective, repair or replace the component before operating the machine.
8. Before operating the machine with an attachment or accessory, ensure that the component is properly installed and approved by Scag Power Equipment.
9. Do not operate the machine without the side discharge chute installed and in the down position. Ensure any optional grass catcher or mulch plate is completely installed before operating the machine.
10. Check the cutter blade mounting bolts for proper tightness at frequent intervals.
11. Ensure all safety interlock switches are functioning correctly before operating the machine.
12. All equipment must comply with state and local ordinances as well as the latest SAE J137 or ANSI/ASAE S279 requirements if the machine is driven on public roads. Contact your local authorities for regulations and equipment requirements.

PROTECTING CHILDREN

Children are attracted to lawn mowing machines and mowing activities. Many associate mowing machines with fun because someone has allowed them to play with a machine in the past. Death or serious injury may occur if the operator is not alert to the presence of children.

1. Keep children out of the operating area and in the care of a responsible adult. Be aware of any children near the operating area.
2. Do not assume that children will stay where you last saw them. Turn off the machine if children enter the operating area.
3. Never allow children to operate the machine, even if the cutter deck is disengaged. Children do not understand safe operating procedures and risk serious injury if control of the machine is lost.
4. Children do not understand the dangers of rotating blades, nor do they understand that the operator is unaware of their presence. Children who have played with a machine in the past may suddenly appear in the operating area and be run over or backed over by the machine.
5. Tragic accidents can occur if the operator is not alert to the presence of children, especially when children approach the machine from behind. Disengage the cutter deck and look down and behind the machine before mowing in reverse.

FUEL & FLUID SAFETY

1. Fuel is flammable and fuel vapors are explosive; handle it with extreme care.
2. Keep all flammable ignition sources (cigarettes, matches, etc.) away from the machine and any fuel containers. Never store fuel near open flames, heat sources, or sparks.
3. Never fuel indoors or inside enclosed spaces. Move the machine outside for adequate ventilation.
4. Store fuel only in portable, non-metal containers approved by the Underwriter's Laboratory (U.L.) or the American Society for Testing & Materials (ASTM).
5. Place containers on the ground to prevent fires and explosions caused by static electric discharge. Fuel vapors can be ignited by static electric discharge in ungrounded containers.
6. Do not fill fuel containers on a truck or trailer bed with a plastic liner. Always place containers on the ground away from vehicles before filling.
7. Always use a funnel or spout to prevent oil and fuel spillage. If fuel is spilled, do not start the machine or create any source of ignition until the fuel has been cleaned and the vapors have evaporated.
8. Clean any oil and fuel spillage before operating the machine. Remove all oil- and fuel-soaked debris.

⚠ CAUTION

Areas affected by fuel spills may suffer from irritation, chemical burns, and contact dermatitis. If fuel is spilled on clothing, change the clothing immediately and wash any affected skin.

9. Never remove the fuel tank cap or add fuel while the machine is running. Allow the engine to cool before adding fuel.
10. Do not operate the machine without the exhaust system installed and working properly.

⚠ DANGER

Exhaust fumes are hazardous and contain carbon monoxide, which can cause brain injury and death. Do not run the machine indoors or inside confined areas without proper ventilation.

11. Ensure all hydraulic fluid connections are tight and that all hydraulic hoses and lines are in a good operating condition before starting the machine.

SAFETY INTERLOCK SYSTEM

⚠ WARNING

This machine is equipped with a safety interlock system intended to protect the operator and others from injury.

This is accomplished by preventing the engine from starting unless the deck drive is disengaged and the transmission is in neutral.

The safety interlock system will shut off the engine if the operator releases the operator presence levers with the deck drive or the transmission engaged.

Never operate the machine with the interlock system disconnected, bypassed, or malfunctioning.

The safety interlock system should be tested before each use of the machine. If the safety interlock system does not operate as described in the following procedure, contact your local Authorized Scag Dealer immediately to have the system repaired. Do not operate the machine until the safety interlock system has been repaired.

1. Place the steering control levers in the neutral lock position, place the transmission shift lever in the neutral position, and engage the PTO switch to the ON (up) position. Try to start the engine; the engine should not start.
2. Place the steering control levers in the neutral lock position, move the transmission shift lever out of the neutral position. Move the PTO switch to the OFF (down) position. Try to start the engine; the engine should not start.
3. Place the steering control levers in the neutral lock position, place the transmission shift lever in the neutral position, move the PTO switch to the OFF (down) position, and start the engine. With the engine running, engage the PTO switch to the ON (up) position, and remove your hands from the operator presence controls on the handle bars. The engine should shut off.
4. Place the steering control levers in the neutral lock position, place the transmission shift lever in the neutral position, move the PTO switch to the OFF (down) position, and start the engine. With the engine running, move the transmission shift lever out of the neutral position, and remove your hands from the operator presence controls on the handle bars. The engine should shut off.

POWER TAKE-OFF (PTO) SYSTEM

The PTO system should be tested before each use of the machine. If the PTO system does not operate as described in the following procedure, contact your local Authorized Scag Dealer immediately to have the PTO system repaired. Do not operate the machine until the PTO system has been repaired.

1. Stand in the operating position, engage the parking brake, place the neutral latches in the neutral lock position, ensure the transmission is in neutral, and start the engine.
2. Set the throttle at three-quarters (3/4) speed.
3. Engage the cutter deck by pulling the yellow PTO switch, located on the instrument panel, up. See Figure 2-2 for more information.

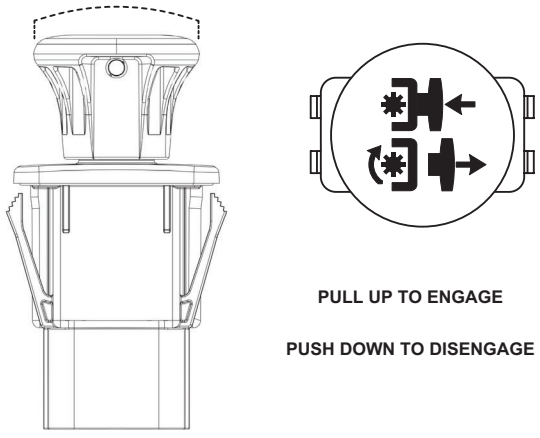

Figure 2-2. PTO Switch Function

4. Confirm that the cutter deck drive belt is engaged and turning the cutter deck spindles.
5. Disengage the cutter deck by pushing the yellow PTO switch down.
6. Confirm that all movement in the cutter deck drive belt has stopped.

2.3 DURING OPERATION SAFETY

GENERAL CONSIDERATIONS

⚠ DANGER

This machine is capable of throwing objects and amputating hands and feet. Failure to follow these instructions may result in serious injury or death.

⚠ WARNING

Extended operation of this machine exposes the operator to whole-body and hand-arm vibrations.

Prolonged exposure to these vibrations may cause discomfort, numbness, tingling, fatigue, back pain, and reduced hand dexterity. Long-term exposure may lead to permanent circulatory issues, nerve damage, carpal tunnel syndrome, and musculoskeletal injury.

Reduce vibration exposure by limiting operation time and taking regular breaks.

1. Understand the function of all controls and how to stop the machine quickly before use.
2. Avoid all distractions while operating the machine. Do not operate the machine while sick, tired, or under the influence of alcohol or drugs.
3. Only operate the machine in daylight, artificial light, and appropriate weather conditions. Do not operate the machine during lightning, thunderstorms, or other inclement weather.
4. Do not mow wet grass. Wet grass reduces traction and steering control of the machine.
5. Start the engine with the neutral latches placed in the neutral lock position, the transmission in neutral, the parking brake engaged, and the PTO switch disengaged.
6. Operate the machine using steady motions. Do not turn sharply. Be aware of your surroundings while backing up. Always yield the right-of-way when crossing roads and sidewalks.
7. Immediately engage the parking brake if steering control is lost during operation. Inspect the machine and correct any problems before continuing to operate.
8. Be aware of obstacles in your work area. Keep away from any trees, walls, and drop-offs. Beware of overhead obstructions (low branches, electrical wires, etc.) and underground obstructions (holes, rocks, roots, pipes, sprinklers, etc.). Stay alert for hidden hazards, and cautiously enter new areas.
9. Stay at least two machine widths away from drop-offs, ditches, retaining walls, and water. Avoid any excessively steep slopes.
10. Never raise the cutter deck with the blades engaged.
11. Disengage power to the cutter deck before traveling in reverse. Do not mow in reverse unless absolutely necessary. If you must mow in reverse, observe the entire area behind the machine before proceeding. Mow slowly and maintain constant awareness of the area behind the machine.
12. Disengage power to the cutter deck before crossing roads, walks, or gravel drives.
13. Never direct the discharge of material towards any bystanders. Turn off the machine if any children or bystanders enter the operating area.
14. Do not direct the discharge of material toward walls, obstacles, or obstructions. Reflected material may injure the operator.
15. If the mower discharge becomes clogged, do not attempt to clear the obstruction while the machine is running. Shut off the engine, remove the key, and wait for all movement to stop before proceeding.

⚠ WARNING

Never use hands to dislodge a clogged discharge chute. Use a stick or other device to remove any obstructions after the engine and cutter blades have stopped moving.

16. The machine and any attachments must be stopped and inspected for damage after striking a foreign object. Repair all damage before restarting and operating the machine.
17. Keep hands, feet, and clothing away from moving parts of the machine while it is running. Do not make adjustments to the machine while it is running.

⚠ CAUTION

Do not touch the engine or the muffler while the engine is running or immediately after stopping the machine. These areas are hot enough to cause burns.

18. Never leave the machine unattended while running. Disengage the PTO switch, lower any attachments, engage the parking brake, stop the engine, and remove the key.
19. Disengage power to any attachments when not in use or while transporting the machine.
20. If you are uneasy while operating the machine due to uncertainty of the terrain, stop immediately.

SLOPE OPERATION

Slopes are a major cause of instability, loss-of-control, and tip-over accidents, which may result in severe injury or death. Before operating the machine on any slope, review the safety guidelines and instructions listed in this manual. The owner and operator will be responsible for the safe operation of this machine on slopes.

1. Use extreme caution when operating the machine on any slope or uneven surface.
2. Be aware of obstacles at the base of and on the slope. Do not operate the machine near drop-offs, ditches, embankments, or bodies of water. Remove any hazards before operation, or keep at least two cutting widths between the machine and the hazard.
3. Mark uneven terrain (holes, bumps, roots, rocks, ruts, soft turf, etc.) before operation. Uneven terrain may cause instability and overturn the machine.
4. Travel across the slope whenever possible. Do not travel up or down the slope.
5. Reduce speed and use extreme caution on slopes to prevent instability, loss of control, and tipping. Be especially cautious when changing directions on slopes.
6. Avoid starting and stopping on slopes. Keep all movements on slopes slow and gradual. If the machine loses traction, disengage power to the cutter deck and proceed slowly down the slope.
7. Do not operate the machine in conditions with questionable traction, steering, or stability. Do not mow wet grass, as the reduced traction may cause sliding and a loss of braking and steering.
8. Never park the machine on slopes or uneven terrain.

2.4 AFTER OPERATION SAFETY

GENERAL CONSIDERATIONS

1. Disengage the PTO switch, ensure the transmission is in neutral, engage the parking brake, place the neutral latches in the neutral lock position, stop the engine, and remove the key before cleaning, adjusting, or repairing the machine. Wait for all movement to stop before proceeding.

IMPORTANT

Disconnect the spark plug wire before servicing or adjusting the machine to further prevent accidental starting of the engine.

2. Never make adjustments to the machine while the engine is running unless specifically instructed to do so. Keep hands, feet, and clothing away from the moving parts of the machine.
3. Do not touch parts that may be hot from operating the machine. Allow all hot parts to cool before maintaining, adjusting, or servicing the machine.
4. Clean dirt, grass, leaves, excessive grease, and oil from cutter decks, drives, muffler, and engine after use to reduce fire hazards.
5. Store the keys to the machine in a safe location when the machine is not in use. This location must be inaccessible to children.

MAINTENANCE SAFETY

1. Always park the machine on a level surface and engage the parking brake.
2. Disconnect the battery before repairing the machine. Disconnect the negative terminal first and the positive terminal last. Reconnect the positive terminal first and the negative terminal last when reinstalling the battery.
3. Never allow untrained personnel to service the machine. Ensure all mechanics working with the machine are appropriately trained and understand the procedures outlined in this manual.
4. Keep all nuts, bolts, and screws tight to ensure the machine is in a safe working condition. Check blade mounting bolts frequently to ensure they are tight.

5. Keep all parts in a good working condition. Replace all worn, damaged, or defective decals.
6. Be cautious when checking blades. Use a Blade Buddy (P# 9212), wrap the blade(s), or wear gloves when servicing blades.
7. Always replace damaged blades. Never straighten or weld damaged blades.
8. Do not change the engine governor settings or overspeed the engine. See the Engine Owner's Manual for information on engine settings.
9. Use jack stands rated for the weight of the machine to support components when required.
10. Carefully release pressure from any components with stored energy.

⚠ WARNING

Hydraulic fluid is under high pressure and can cause serious injury by penetrating skin.

Before performing maintenance on the hydraulic system, relieve all hydraulic pressure by placing the control levers in the neutral lock position and stopping the engine.

11. Never use hands to check for hydraulic leaks. Use paper or cardboard to search for leaks.

⚠ WARNING

Keep body and hands away from pinholes or nozzles that eject high-pressure hydraulic fluid. If hydraulic fluid is injected into the skin, it must be surgically removed by a doctor within a few hours, or gangrene may result. If your hydraulic system needs service, please see your Authorized Scag Dealer.

STORAGE & TRANSPORTATION SAFETY

1. Allow the engine to cool before storing the machine.
2. Shut off the fuel system while storing or transporting the machine.
3. Store the machine in a clean garage or storage area. Do not store the machine near open flames, sparks, fuel containers, or other hazards.
4. Service the machine before storing over long periods of time. Check all nuts, bolts, and screws to ensure the machine is in a safe working condition. Change the air cleaner, engine oil, and apply grease.
5. Cover the machine to protect it while storing over long periods of time.
6. Charge the battery in an open, well-ventilated area. Keep away from sparks and open flames. Unplug the charger before connecting or disconnecting from the battery. Always wear protective clothing and use insulated tools while working with the battery.
7. Transport the machine using a heavy-duty trailer or truck with a load rating greater than the weight of the machine. Ensure the trailer or truck complies with all legal requirements for lighting and markings. Refer to local ordinances for specific trailer and tie-down requirements before use.
8. Only use a full-width ramp to transport the machine.
9. Use caution when loading or unloading the machine onto a truck or trailer. Always load and unload with the heavy end of the machine facing up the ramp.
10. When transporting the machine, ensure the transmission is in neutral, the neutral latches are in the neutral lock position, the parking brake is engaged, and the engine is off with the key removed. Block the tires before transporting.
11. Tie the machine down securely using straps, chains, or cables. Both the front and rear straps must be directed down and outward from the machine. Refer to local ordinances for tie-down requirements before use.

2.5 SPARK IGNITION SYSTEM

The spark ignition system equipped on this machine complies with Canadian ICES-002.

2.6 USE OF A SPARK ARRESTOR

The engine on this machine is not equipped with a spark arrestor muffler. It is in violation of California Public Resource Code, Section 4442, to operate the machine on or near any forest-covered, brush-covered, or grass-covered land unless the exhaust system is equipped with a spark arrestor that meets any applicable local and state laws. Other states and federal areas may have similar laws. Check with your local and state authorities for regulations pertaining to these requirements.

2.7 SAFETY AND INSTRUCTIONAL DECAL DETAILS



483405



487212



483406

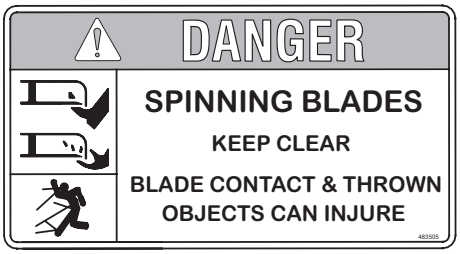

483505



483900
(supplied with California models only)

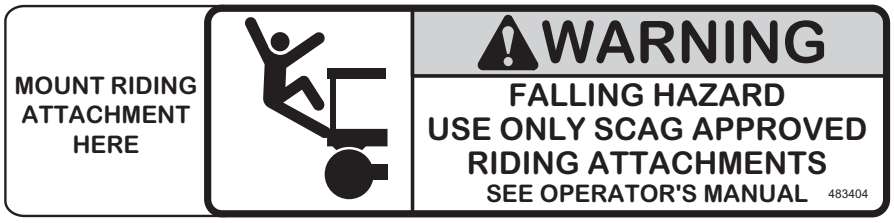

483404

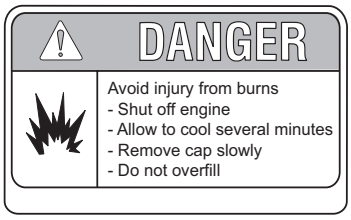

Molded in Fuel Tank
485667 Replacement

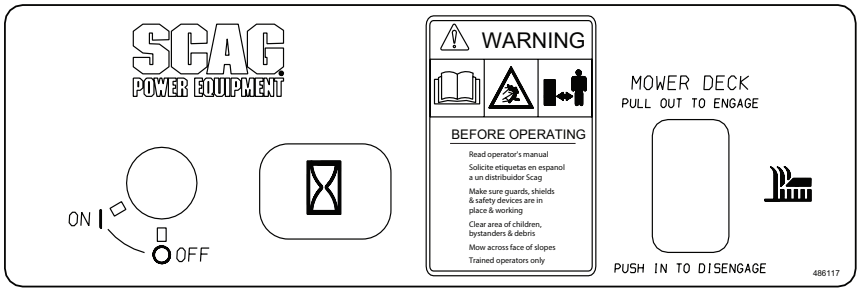

486117

2019 SW Safety Decals

SPECIFICATIONS

3.1 ENGINE

General Type ..... Heavy Duty Industrial/Commercial Gasoline
Engine Model:
- Kawasaki 14FS FS481V-FS18
- Kawasaki 15FS FS541V-FS19

Displacement:
- Kawasaki FS481V 603cc
- Kawasaki FS541V 603cc

Idle Speed:
- Kawasaki ..... 1550 RPM (+/- 150 RPM)

Full Speed:
- Kawasaki ..... 3600 RPM (+/- 100 RPM)

Fuel ..... Non-Leaded Gasoline with a Minimum Octane Rating of 87

3.2 ELECTRICAL

Starter ..... Electrical Ignition with Recoil Starter
Interlock Switches ..... Operator Presence, Mower Engagement (PTO), Transmission Neutral
Instrument Panel ..... Key Switch, Throttle Lever, PTO Switch, Hour Meter

3.3 DRIVE SYSTEM

Drive System ..... Dual Belt Drive w/5-Speed Peerless Transmission
Steering/Travel Control ..... Clutch/Brake Fingertip Steering
Wheels:
- (2) Front Caster ..... 9 X 3.5 Flat-Free w/Roller Bearings
- (2) Drive - ..... 15 x 6.5-6 Two-Ply Pneumatic Tubeless, Radius Edge

Tire Pressure:
- Front Caster ..... Flat-Free
- Drive ..... 12 PSI

Fuel Tank ..... 5-1/2 Gallon Seamless Polyethylene Tank with Large Opening, Fuel Cap, Fuel Gauge and Cup Holder
Travel Speed:
- Forward ..... 2 up to 6 MPH
- Reverse ..... 2 MPH

-NOTE- The machine will travel at 6 mph for transport purposes. For best cutting performance the forward travel speed should be adjusted depending upon the cutting conditions.

3.4 CUTTER DECK

Type.....Out-Front design with anti-scalp rollers
Construction .....7-Gauge Deck Top w/10-Gauge Reinforced Spindle Area, 7-gauge (3/16") Deck Skirt.
True Cutting Width:
32 .....32" (81.3 cm)
36 .....35.5" (90.2 cm)
48 .....48" (122.0 cm)
52 .....52" (132.0 cm)
Cutting Height Adjustment..... Adjustment from, 1-3/4" to 4-1/4" in 1/4"increments
Cutter Blades.....0.197 in. Thick, Milled Edge, Wear Resistant Marbain™
Blade Engagement.....Electric Blade Engagement Clutch with Control Panel Switch Connected to the Cutter Deck through a Belt.
Discharge Opening.....Extra Wide Discharge Opening with Spring-Loaded Discharge Chute
Discharge Chute.....Black, Polypropylene (Plastic), Flexible
Spindles.....Cast-Iron Housing, Tapered Roller Bearings with Top Access Grease Fitting and Grease Overfill Relief Poppet
Spindle Pulleys.....Split Steel with Tapered Locking Hub
Cutter Deck Belts..... B-section with Kevlar Cord. Self-Adjusting, Self-Tightening
Electric Clutch Type.....Ogura Heavy Duty PTO Clutch Brake

3.5 WEIGHTS AND DIMENSIONS

	32 / 36A	48V	52V
Length	70" / 72"	76"	76"
Tracking Width	32" / 37"	37"	37"
Overall Width w/chute down	43" / 47"	60.5"	64.5"
Overall Width w/chute up	33" / 37"	49"	53"
Overall Height	40.5 / 40.5"	40.5"	40.5"
Operating Weight	450# / 470#	515#	535#

3.6 PRODUCTIVITY

	32 / 36	48	52
Cutting Width	32" / 36"	48"	52"
Acres Per Day	8.3 / 9.3	12.4	13.5

The preceding data will aid you in determining how many acres your Scag mower will cut per day. It is an estimate based on 8 hours per day cutting time at 4 MPH with a 20% allowance for overlap and turns.

OPERATING INSTRUCTIONS

⚠ WARNING

Do not attempt to operate this mower unless you have read this manual. Learn the location and purpose of all controls and instruments before you operate this mower.

4.1 CONTROLS & INSTRUMENT IDENTIFICATION

Before operating the mower, familiarize yourself with all mower and engine controls. Knowing the location, function and operation of these controls is important for safe and efficient operation of the mower.

1. **Ignition Switch (Figure 4-1).** The ignition switch is used to start the engine. Turn the key to the on position before pulling the recoil starter.
2. **Mower Deck Switch (Figure 4-1).** Use to engage and disengage the mower drive system. Pulling up on the switch will engage the deck drive. Pushing down on the switch will disengage the deck drive.
3. **Engine Choke Control (Figure 4-1).** Use to start a cold engine.
4. **Engine Throttle Control (Figure 4-1).** Use to control the engine speed. Pushing the lever forward increases engine speed. Pulling the lever back decreases engine speed. Full back position is the IDLE position. Full forward is the cutting position.
5. **Left Steering / Brake Control (Figure 4-1).** Use to control the mower's left wheel when traveling forward or reverse. Pull upward to apply brake.
6. **Right Steering / Brake Control (Figure 4-1).** Use to control the mower's right wheel when traveling forward or reverse. Pull upward to apply brake.
7. **Hour Meter (Figure 4-1).** Indicates the number of hours the engine has operated. It operates whenever the engine is running. Has preset maintenance reminders for engines and hydraulic system oil changes. Will start flashing scheduled maintenance 2 hours before preset time and continue flashing until 2 hours after. Automatically resets.

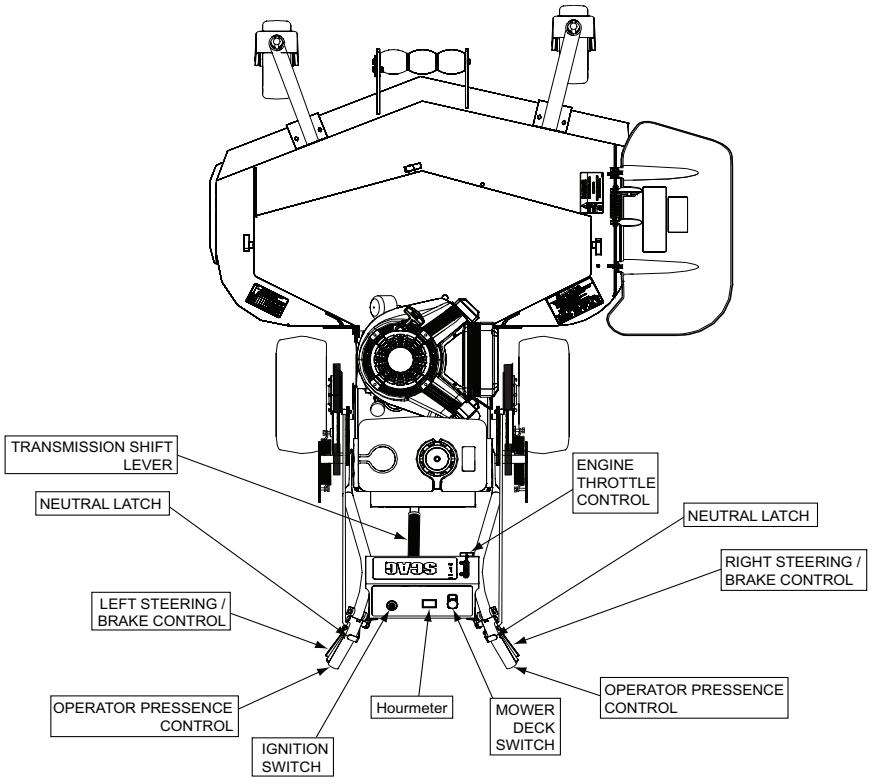

Figure 4-1. Controls and Instruments

8. **Transmission Shift Lever (Figure 4-1).** Use to select the forward speed or selecting reverse. The machine must be at a complete stop before shifting between gears or shifting between forward and reverse.
9. **Neutral Latch (Figure 4-1).** Use to secure the belt drive system in neutral. Apply neutral latches when parking the machine.
10. **Operator Presence Control (Figure 4-1).** The operator presence control levers must be depressed before the transmission is shifted out of neutral or engaging the mower deck.

4.2 SAFETY INTERLOCK SYSTEM

The mower is equipped with a safety interlock system that shuts off the engine if the operator releases the operator presence levers with the deck drive engaged and/or the transmission is not in neutral. Never operate equipment with the interlock system disconnected or malfunctioning.

4.3 TESTING THE SAFETY INTERLOCK SYSTEM

1. Place the steering control levers in the neutral lock position, place the transmission shift lever in the neutral position, and engage the PTO switch to the ON (up) position. Try to start the engine; the engine should not start.
2. Place the steering control levers in the neutral lock position, move the transmission shift lever out of the neutral position. Move the PTO switch to the OFF (down) position. Try to start the engine; the engine should not start.
3. Place the steering control levers in the neutral lock position, place the transmission shift lever in the neutral position, move the PTO switch to the OFF (down) position, and start the engine. With the engine running, engage the PTO switch to the ON (up) position, and remove your hands from the operator presence controls on the handle bars. The engine should shut off.
4. Place the steering control levers in the neutral lock position, place the transmission shift lever in the neutral position, move the PTO switch to the OFF (down) position, and start the engine. With the engine running, move the transmission shift lever out of the neutral position, and remove your hands from the operator presence controls on the handle bars. The engine should shut off
5. Place the steering control levers in the neutral lock position, place the speed control lever in the neutral position, engage the parking brake, move the PTO switch to the OFF (down) position. Stand in the operating position for electric start models. Start the engine. With the engine running, move the speed control lever out of neutral, and remove your hands from the operator presence controls on the handle bars. The engine should shut off.

⚠ WARNING

Never operate the mower with the interlock system disconnected or malfunctioning. Do not disengage or bypass any switch; injury to yourself and others or property damage could result.

4.4 INITIAL RUN-IN PROCEDURES

FIRST DAY OF USE OR APPROXIMATELY 20 HOURS

1. Check all belts for proper alignment and wear at 2, 4 and 8 hours.
2. Change the engine oil and oil filter after the first 20 hours of operation. (See Section 7.3.)
3. Check for loose hardware. Tighten as needed.
4. Check interlock system for proper operation. (See Section 4.2.)
5. Check tire pressure. Adjust pressure if necessary. (See Section 7.7.)

4.5 STARTING THE ENGINE

⚠ CAUTION

DO NOT USE STARTING FLUIDS. Use of starting fluids in the air intake system may be potentially explosive or cause a "runaway" engine condition that could result in engine damage and/or personal injury.

1. Be sure the fuel shutoff valve, located by the fuel tank, is completely open. (See Section 7.4.)
2. Apply the neutral latch levers.
3. Shift the transmission into neutral.
4. Place the PTO switch in the disengaged position.
5. If the engine is cold, choke the engine as needed.
6. Move the engine throttle control to about half engine speed.
7. Turn the ignition key to the ON position.
8. Pull the recoil starter on the engine.
9. Allow engine to warm before operating the mower.

4.6 GROUND TRAVEL AND STEERING

- IMPORTANT -

If you are not familiar with the operation of a walk behind mower with a transmission, the steering and ground speed operations should be learned and practiced in an open area, away from buildings, fences, or obstructions.

Learn the operation on flat ground before operating on slopes.

Start practicing with a slow engine speed and slow forward travel.

Learn to feather the steering controls to obtain a smooth operating action.

Practice operating the mower until you are comfortable with the controls before proceeding to mow.

FORWARD TRAVEL

To travel forward with the mower, select the desired speed using the transmission shift lever, pull steering / brake control levers upward, release the neutral latch for both sides and slowly release both the left and right steering / brake control levers. The higher the gear selected using the transmission shift lever, the faster the machine will travel.

To stop the forward travel, pull upward on the steering / brake control levers, lock the neutral latches and shift the transmission into neutral.

To steer the mower left while traveling forward, pull upward on the left steering / brake control lever. The further the lever is pulled upward, the quicker the mower will turn left.

To steer the mower right while traveling forward, pull upward on the right steering / brake control lever. The further the lever is pulled upward, the quicker the mower will turn right.

⚠ WARNING

To avoid serious bodily injury and damage to the transmission, the machine must be at a full stop before shifting between gears or shifting between forward and reverse.

- NOTE -

Smooth operation of the steering / brake control levers will produce smooth mower operation. While learning the operation of the steering controls, keep the travel speed low.

REVERSE TRAVEL

⚠ CAUTION

Disengage power to the mower before backing up. Do not mow in reverse unless absolutely necessary and then only after observation of the entire area behind the mower.

⚠ CAUTION

Before backing up, observe the rear for persons and obstructions. Clear the area before backing up. Possible injury or property damage could occur.

To travel in reverse, select the reverse gear using the transmission shift lever, pull steering / brake control levers upward, release the neutral latch for both sides and slowly release both the left and right steering / brake control levers. Keep the travel speed low while traveling in reverse.

- NOTE -

The mower may not travel straight in reverse.

To steer left while traveling in reverse, pull upward on the left steering / brake control lever. The further the lever is pulled upward, the quicker the mower will turn left.

To steer right while traveling in reverse, pull upward on the right steering / brake control lever. The further the lever is pulled upward, the quicker the mower will turn right.

To stop the reverse travel, pull upward on the steering / brake control levers, lock the neutral latches and shift the transmission into neutral.

4.7 ENGAGING THE DECK DRIVE (CUTTER BLADES)

1. Set the throttle at about 3/4 speed. Do not attempt to engage the deck drive at high speed as this shortens the electric clutch life — use only moderate engine speed when engaging the deck drive.
2. Engage the deck drive by pulling out on the yellow switch, located on the instrument panel, to the engage position. See Figure 4-2.

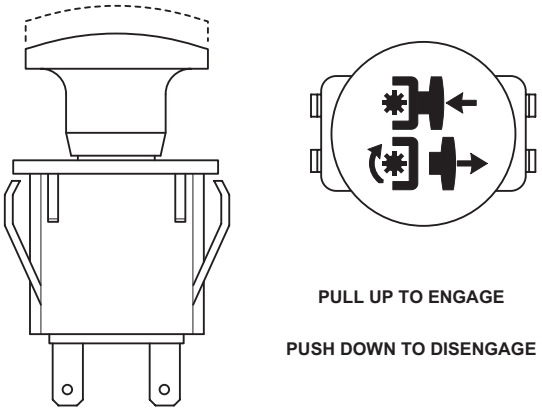

Figure 4-2. Cutter Engage Switch

- NOTE -

A squealing noise may be heard when engaging or disengaging the deck drive. It is caused by the electric clutch plates meshing as the mower comes up to speed. This is normal.

3. To disengage the deck drive, push the switch in to the disengage position.
4. Always operate the engine at full throttle to properly maintain cutting speed. If the engine starts to lug down, reduce the forward speed and allow the engine to operate at maximum RPM.

4.8 HILLSIDE OPERATION

⚠ WARNING

DO NOT operate on steep slopes. ALWAYS FOLLOW OSHA APPROVED OPERATION.

1. This mower has been designed for good traction and stability under normal mowing conditions. However, caution must be used when traveling on slopes, especially when the grass is wet. Wet grass reduces traction and steering control.
2. To prevent tipping or loss of control, do not start or stop suddenly, avoid unnecessary turns and travel at reduced speed. If tires lose traction, disengage blades and proceed slowly off the slope.
3. Avoid sudden starts when mowing on slopes.
4. Travel across the slope whenever possible. Never up and down the slope.
5. Keep tires properly inflated. (See Section 7.7.)

4.9 PARKING THE MOWER

1. Park the machine on a flat, level surface only. Do not park the machine on an incline.
2. Disengage the cutter blades.
3. Lock the neutral latches and shift the transmission into the neutral position.
4. Slow the engine to idle speed.
5. Turn the ignition key to the OFF position and remove the key.

4.10 AFTER OPERATION

1. Wash the entire mower after each use. Do not use high pressure spray or direct the spray onto electrical components.

- IMPORTANT -

Do not wash a hot or running engine. Cold water will damage the engine. Use compressed air to clean the engine if it is hot.

2. Keep the entire mower clean to inhibit serious heat damage to the engine or hydraulic oil circuit.
3. Check the drive belts for proper alignment and any signs of wear. Correct and adjust if necessary.

⚠ DANGER

To avoid injury from burns, allow the mower to cool before removing the fuel tank cap and refueling.

4. After the mower has cooled down, fill the fuel tank with fresh, clean fuel at the end of every day of operation. See Engine Owner's Manual for proper octane requirements.
5. Check the tire pressure. Adjust pressure if necessary. (See Section 7.7.)

4.11 REMOVING CLOGGED MATERIAL

⚠ DANGER

ROTATING BLADES

NEVER PUT YOUR HANDS INTO THE DISCHARGE CHUTE FOR ANY REASON!

Shut off the engine and remove the key and only then use a stick or similar object to remove material if clogging has occurred.

1. If the discharge chute becomes clogged, shut off the engine and remove the ignition key. Using a stick or similar item, dislodge the clogged material. Then resume normal mowing.

4.12 MOVING MOWER WITH ENGINE STOPPED

To “free-wheel” or move the mower around without the engine running, engage the neutral latches, shift the transmission to neutral and move the mower by hand.

4.13 RECOMMENDATIONS FOR MOWING

1. Do not mow with dull blades. A dull blade will tear grass, resulting in poor lawn appearance and reduced mowing power.

⚠ WARNING

DO NOT operate without Discharge Chute, Mulching Kit, or entire Grass Catcher properly installed.

2. The discharge chute must not be removed and must be kept in the lowest position to deflect grass clippings and thrown objects downward. Direct the side discharge away from sidewalks or streets to minimize cleanup of clippings. When mowing close to obstacles, direct the discharge away from the obstacles to reduce the chance of property damage by thrown objects.
3. Cut grass when it is dry and not too tall. Do not cut grass too short (cut off 1/3 or less of existing grass for best appearance). Mow frequently.
4. Keep mower and discharge chute clean.
5. When mowing wet or tall grass, mow the grass twice. Raise the mower to the highest setting for the first pass and then make a second pass to the desired height.
6. Use a slow travel speed for trimming purposes.
7. Operate the engine at full throttle for best cutting. Mowing with a lower RPM causes the mower to tear the grass. The engine is designed to be operated at full speed.
8. Use the alternate stripe pattern for best lawn appearance. Vary the direction of the stripe each time the grass is mowed to avoid wear patterns in the grass.

TROUBLESHOOTING CUTTING CONDITIONS

CONDITION	CAUSE	CURE
STRINGERS - OCCASIONAL BLADES OF UNCUT GRASS 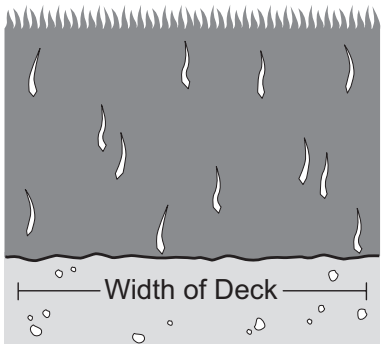	Low engine RPM	Run engine at full RPM
	Ground speed too fast	Slow speed to adjust for conditions
	Wet grass	Cut grass after it has dried out
	Dull blades, incorrect sharpening	Sharpen blades
	Deck plugged, grass accumulation	Clean underside of deck
	Belts slipping	Adjust belt tension
STREAKING - STRIPS OF UNCUT GRASS IN CUTTING PATH 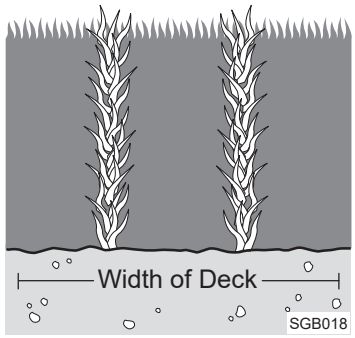	Dull, worn blades	Sharpen blades
	Incorrect blade sharpening	Sharpen blades
	Low engine RPM	Run engine at full RPM
	Belt slipping	Adjust belt tension
	Deck plugged, grass accumulation	Clean underside of deck
	Ground speed too fast	Slow speed to adjust for conditions
	Wet grass	Cut grass after it has dried out
	Bent blades	Replace blades
STREAKING - STRIPS OF UNCUT GRASS BETWEEN CUTTING PATHS 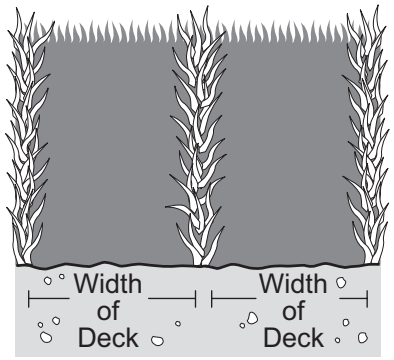	Not enough overlapping between rows	Increase the overlap of each pass

TROUBLESHOOTING CUTTING CONDITIONS (CONT'D)

CONDITION	CAUSE	CURE
UNEVEN CUT ON FLAT GROUND - WAVY HIGH-LOW APPEARANCE, SCALLOPED CUT, OR ROUGH CONTOUR 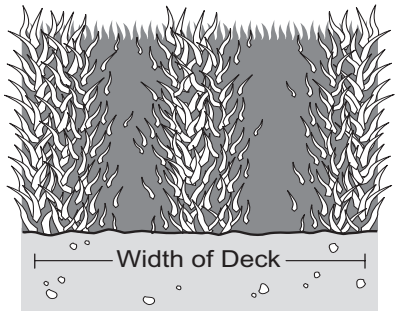	Lift worn from blade	Replace blade
	Blade upside down	Mount with cutting edge toward ground
	Deck plugged, grass accumulation	Clean underside of deck
	Too much blade angle (deck pitch)	Adjust pitch and level
	Deck mounted improperly	See your authorized SCAG dealer
	Bent spindle area	See your authorized SCAG dealer
	Dull blade	Sharpen blade
UNEVEN CUT ON UNEVEN GROUND - WAVY APPEARANCE, HIGH-LOW SCALLOPED CUT, OR ROUGH CONTOUR 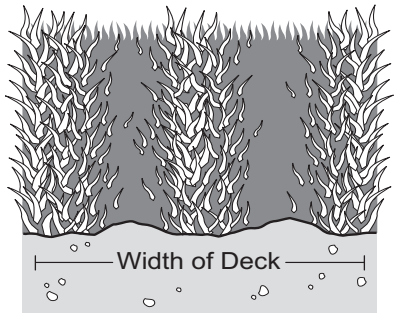	Uneven ground	May need to reduce ground speed, raise cutting height, and/or change direction of cut
SLOPING RIDGE ACROSS WIDTH OF CUTTING PATH 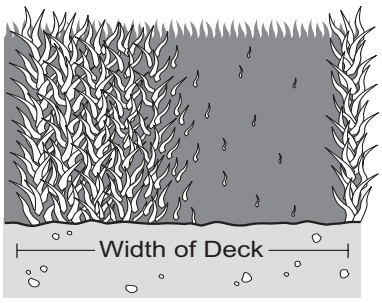	Tire pressures not equal	Check and adjust tire pressure
	Wheels uneven	Check and adjust tire pressure
	Deck mounted incorrectly	See your authorized SCAG dealer
	Deck not level side-to side	Check for level and correct

TROUBLESHOOTING CUTTING CONDITIONS (CONT'D)

CONDITION	CAUSE	CURE
SCALPING - BLADES HITTING DIRT OR CUTTING VERY CLOSE TO THE GROUND 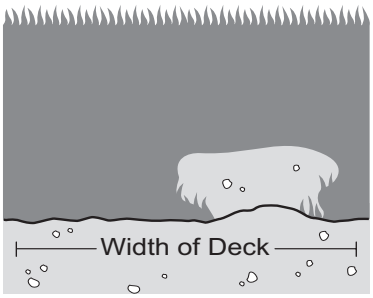	Low tire pressures	Check and adjust pressures
	Ground speed too fast	Slow speed to adjust for conditions
	Cutting too low	May need to reduce ground speed, raise cutting height, change direction of cut, and/or change pitch and level
	Rough terrain	May need to reduce ground speed, raise cutting height, and/or change direction of cut
	Wet grass	Cut grass after it has dried out
STEP CUT - RIDGE IN CENTER OF CUTTING PATH 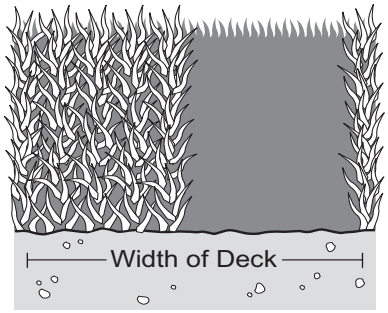	Blades not mounted evenly	Adjust pitch and level
	Bent blade	Replace blade
	Internal spindle failure	See your authorized SCAG dealer
	Mounting of spindle incorrect	See your authorized SCAG dealer
SLOPE CUT - SLOPING RIDGES ACROSS WIDTH OF CUTTING PATH 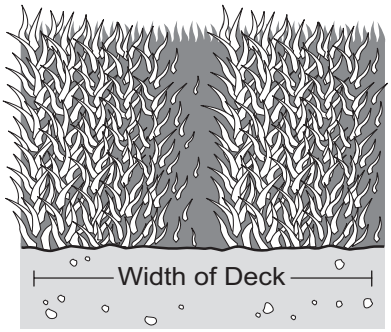	Bent spindle mounting area	See your authorized SCAG dealer
	Internal spindle failure	See your authorized SCAG dealer
	Bent deck housing	See your authorized SCAG dealer

ADJUSTMENTS

6.1 DRIVE CONTROL ADJUSTMENTS

1. Adjust the steering control rods so that there is approximately 3/4" clearance from the bottom of the rod to the bottom of the neutral latch slot when in the drive position. See Figure 6-1.
2. Adjust the steering brake rods so that the brakes do not apply until the steering levers are pulled tight to the handles. When the steering levers are locked in the neutral position the machine should move freely.

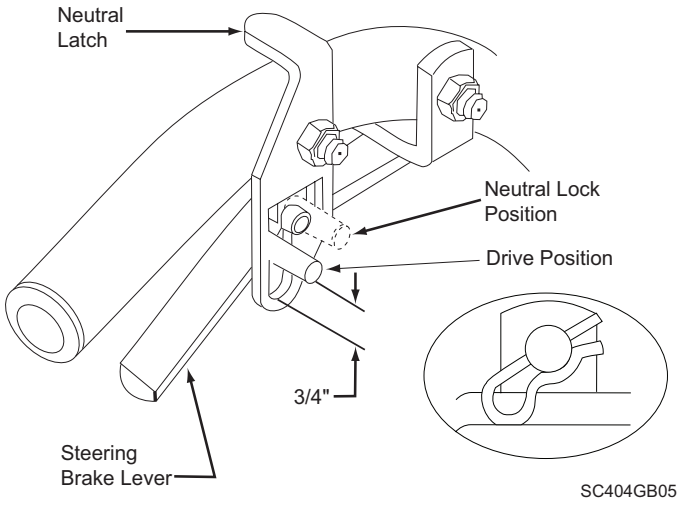

Figure 6-1. Steering Control Rod Adjustment

- NOTE -

Operator presence lever removed for clarity. Never operate equipment with the interlock system disconnected.

6.2 THROTTLE CONTROL AND CHOKE ADJUSTMENTS

These adjustments must be performed by your Authorized Scag Power Equipment Dealer to ensure proper and efficient running of the engine. Should either need adjustment, contact your authorized Scag service center.

6.3 CUTTER DECK BELT ADJUSTMENTS

⚠ WARNING

Before removing any guards, shut the engine off and remove the ignition key. Wait for all moving parts to come to a complete stop before beginning work.

1. Remove the belt cover.
2. Adjust the cutter deck drive belt using a belt tension gauge. Adjust the belt so that the belt moves 1/2" with 10 pounds of pressure. Adjust the tension by tightening or loosening the J-bolt. See Figure 6-2.

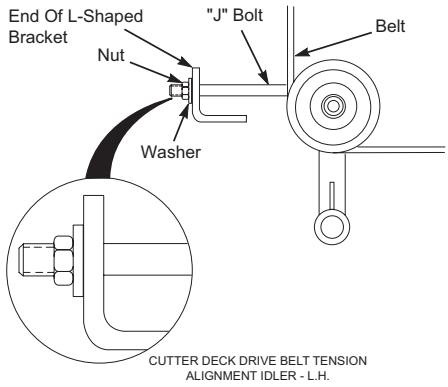

Figure 6-2. Deck Drive Belt Adjustment

-NOTE-

Due to initial belt stretch and to prevent the belt from slipping, check this adjustment after the first 2 hours, 4 hours and 8 hours of operation.

3. Adjust the RH blade drive belt using a belt tension gauge. Adjust the belt so that the belt moves 1/2" with 10 pounds of pressure. Adjust the tension by tightening or loosening the J-bolt. See Figure 6-3 and Figure 6-4.

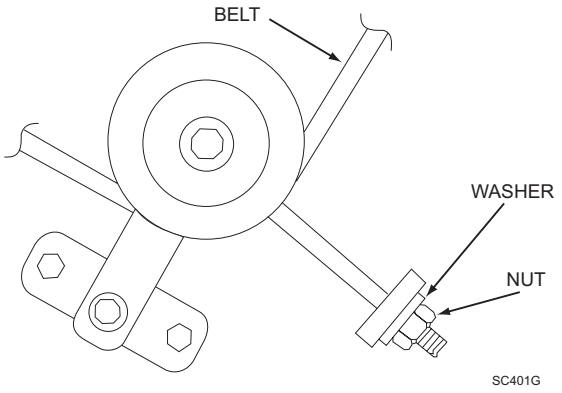

Figure 6-3. Cutter Deck Belt Adjustment R.H.

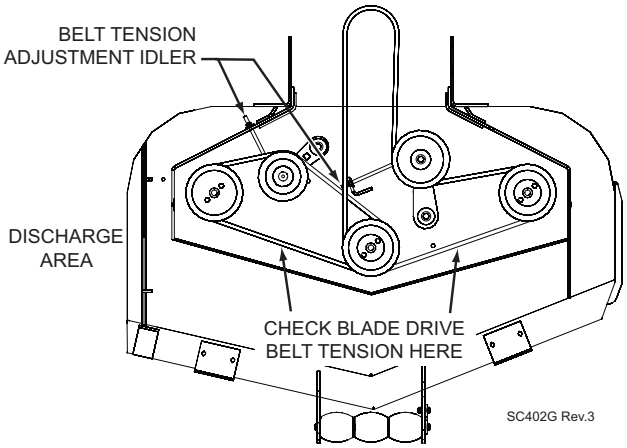

Figure 6-4. Cutter Deck Belt

6.4 BELT ALIGNMENT

Belt alignment is important for proper performance of your Scag mower. If you experience frequent belt wear or breakage, see your authorized Scag service center for belt adjustment.

6.5 ADJUSTING CUTTING HEIGHT

The mower deck can be adjusted from a height of 1-3/4 inches to 4-1/4 inches at 1/4-inch intervals.

Due to many cutting conditions that exist, it is difficult to suggest a cutter deck setting that will work for every lawn. There are two adjustments that can be made to the cutter deck, pitch and height.

PITCH is the angle of the blades (comparing front to rear).

HEIGHT is the nominal distance the blade is off of the ground. This measurement is made with the blades pointed side to side and distance is measured between the cutting tip and ground. (Also see Blade Height Adjustment).

Changes to the cutting height can be achieved by repositioning the cutter deck. (This adjustment will also effect the pitch of the deck). There are three available positions. See Figure 6-5.

Caster spacers also can be repositioned to change the cutting heights and to change the pitch of the cutter deck. See Figure 6-6.

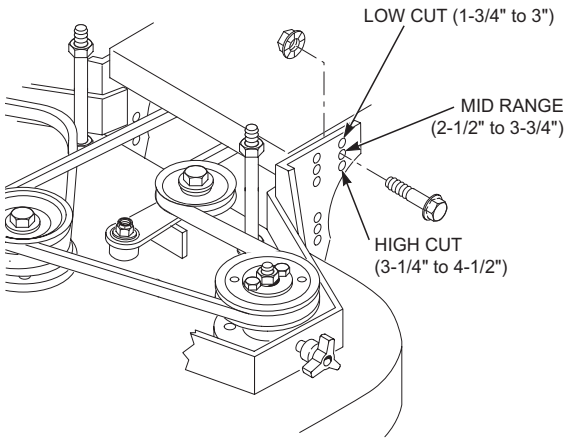

Figure 6-5. Adjusting Cutting Height

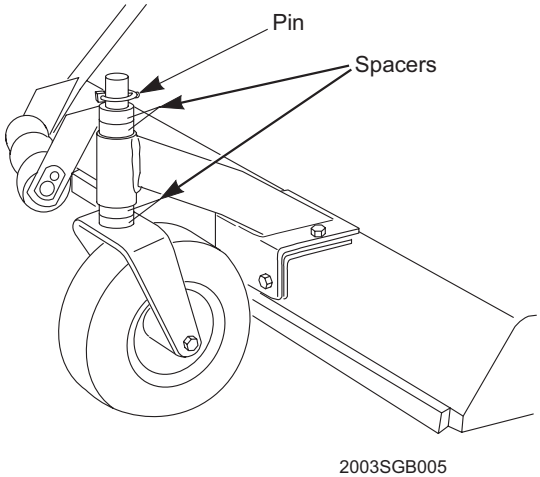

Figure 6-6. Caster Wheel Spacers

BLADE HEIGHT ADJUSTMENT

Adjusting the blade height can be done by moving any number of the five smaller 1/4" spacers on the blade mounting bolts to the top of the spindle shaft or below the spindle shaft.

-NOTE-

All blades should be positioned equally.

⚠ WARNING

Blades have a sharp cutting edge. Wear proper eye protection and protective gloves or wrap the blades with protective material when removing, sharpening and installing blades.

For best cut and discharge, a minimum of three spacers should be installed between the blade and the spindle. See Figure 6-7.

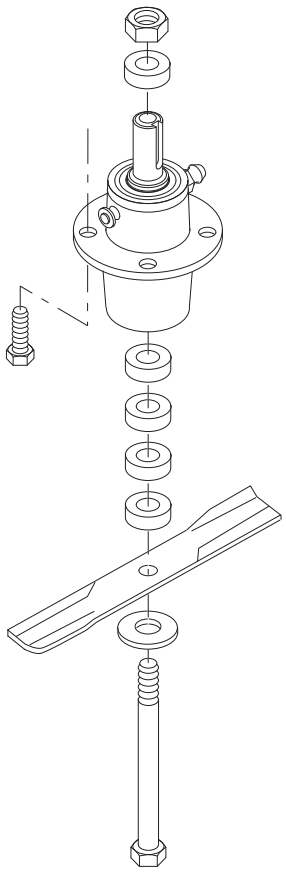

Figure 6-7. Blade Spacers

CUSTOM-CUT BAFFLE ADJUSTMENT

The Custom-Cut Baffle is designed to deliver optimum airflow and superior cutting performance in any type of grass. The Custom-Cut Baffle can be raised or lowered to precisely tailor the deck's performance for the type of grass being cut. The baffle can be set in seven (7) different positions for optimum performance.

A. 3-1/2" or 3-3/4" Position - (See Figure 6-8). For very tall, wiry or tough-to-cut grass.

B. 4" (factory setting), 4-1/4" or 4-1/2" Position - (See Figure 6-8). For general purpose cutting. This gives the best mix of cutting performance in all types of grass.

C. 4-3/4" or 5-1/4" Position - (See Figure 6-8). Placing the baffle in either the 4-3/4" or 5-1/4" setting will enhance fall cutting (leaf pickup) and reduce cutter deck "blowout".

To adjust the Custom-Cut Baffle height:

1. Place the cutter deck in the transport position.
2. Remove the hardware securing the Custom-Cut Baffle to the cutter deck.

- NOTE -

Hardware location used in the illustrations are for reference only. Location of hardware may vary depending on cutter deck size.

3. Move the Custom-Cut Baffle to desired position. (See Figures 6-8).
4. Reinstall the mounting hardware. Torque hardware to 39 ft.-lbs.

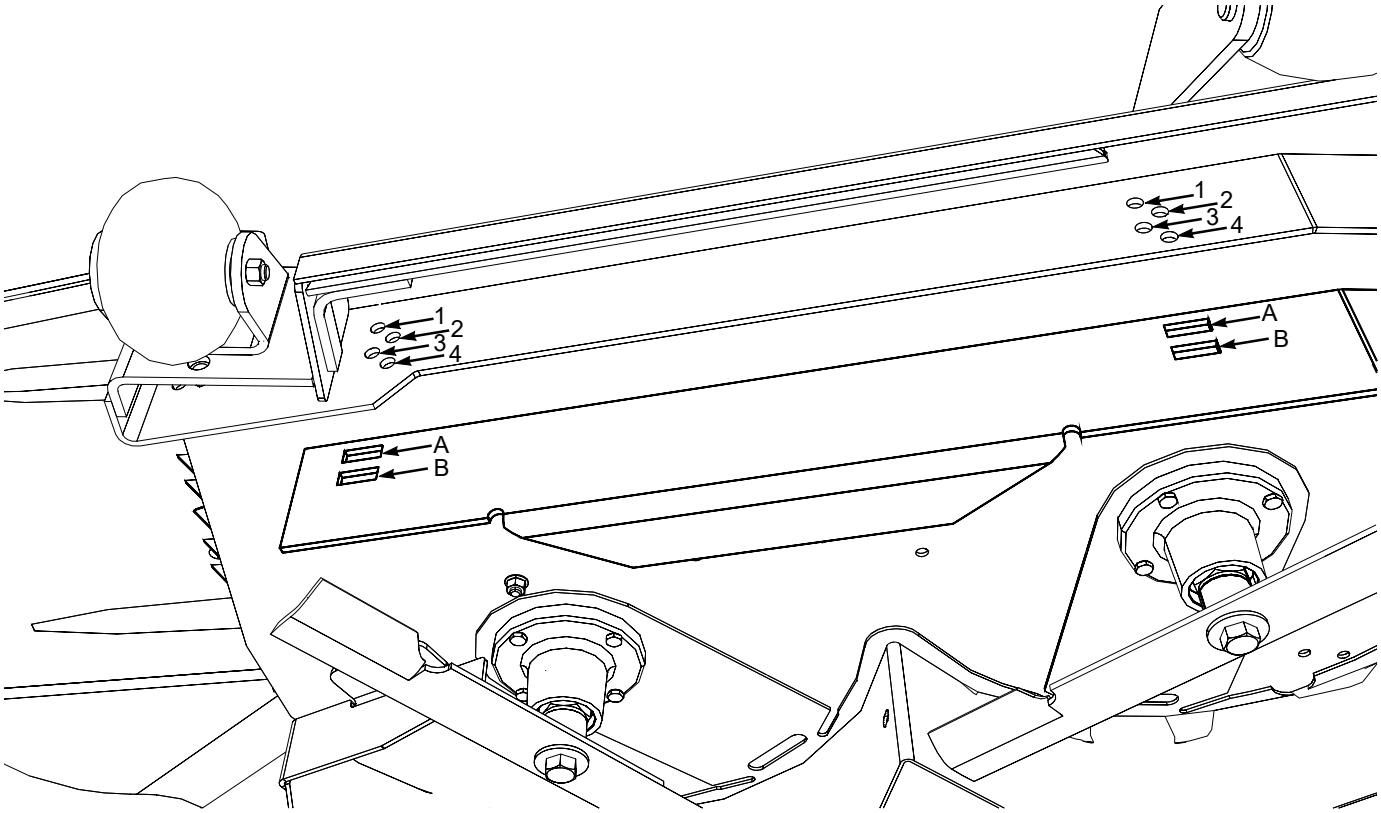

Custom-Cut Baffle Adjustment

Mounting Slot Selected		**Mounting Hardware Location**		
Slot “A”	Hole 1	Hole 2	Hole 3	Hole 4
Height (inches)	3-3/4”	4-1/4”	4-3/4”	5-1/4”
Slot “B”		Hole 2	Hole 3	Hole 4
Height (inches)		3-1/2”	4”	4-1/2”

Figure 6-8. Custom-Cut Baffle Adjustment

6.6 ELECTRIC CLUTCH ADJUSTMENT

The electric clutch serves two functions in the operation of the mower. In addition to starting and stopping the power flow to the cutter blades, the clutch also acts as a brake to assist in stopping blade rotation when the PTO is switched off or the operator presence circuit is interrupted.

When the clutch is disengaged, the air gap between the armature and rotor must be adjusted to fifteen thousandths of an inch, 0.015, for proper operation. The air gap adjustment is made at three bolts on the clutch. There are three inspection windows, one next to each adjusting bolt. See Figure 6-9.

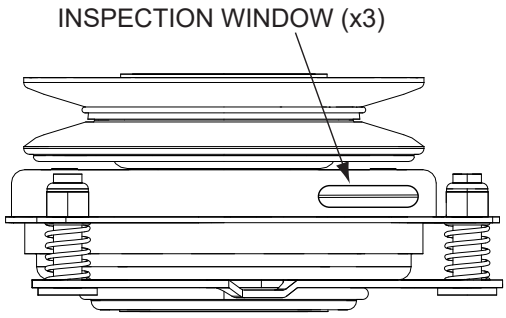

Figure 6-9. Clutch Air Gap Adjustment

1. Locate the inspection windows on the clutch.
2. Place a 0.015 feeler gauge in the slot between the rotor and the armature. See Figure 6-10.

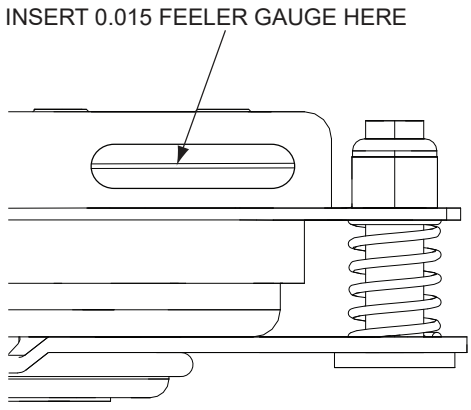

Figure 6-10. Clutch Air Gap Adjustment

3. Tighten or loosen the adjusting bolt as needed to achieve the 0.015 inch air gap. See Figure 6-11. Perform this operation at all three inspection windows.

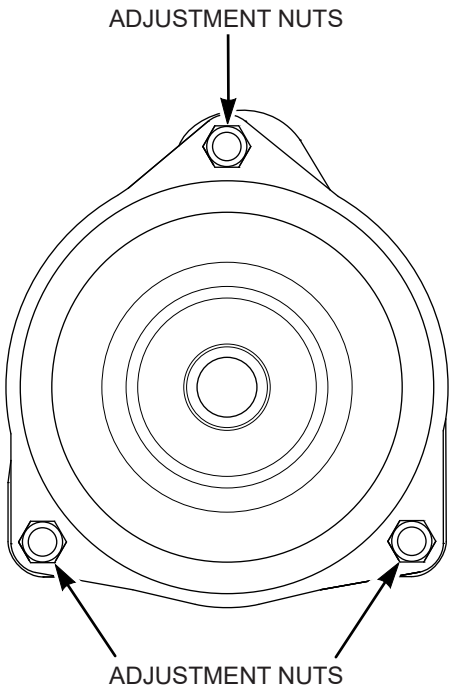

Figure 6-11. Clutch Air Gap Adjustment

This adjustment should be done every 500 hours of operation or annually, whichever comes first. In cases where the machine is heavily used, air gap settings should be checked more often.

If the air gap is too narrow, the clutch armature may drag when disengaged, resulting in premature failure.

If the air gap is too wide, the clutch may be slow to engage as the magnet must pull the armature in from a greater distance

MAINTENANCE

7.1 MAINTENANCE CHART - RECOMMENDED SERVICE INTERVALS

HOURS							PROCEDURE	COMMENTS
BREAK-IN (FIRST 10)	8	20	40	100	200	500		
X							Check all hardware for tightness	
X							Check all belts for proper alignment	See Section 6.4
	X						Check engine oil level	See Section 7.3
	X						*Clean mower	
	X						Check tire pressure	See Section 7.7
	X						*Clean air filter element	See Section 7.5
	X						Check condition of blades	See Section 7.6
	X						Sharpen cutter blades	See Section 7.6
	X						Check tire pressure	See Section 7.7
	X						Check belt tension	See Section 6.3
	X						Check the operator interlock system	See Section 4.2
		X					Change engine oil and filter	See Section 7.3
			X				Grease spindle bearings	
			X				Check belts for proper alignment	See Section 6.4
				X			Check condition of fuel lines	
				X			Check all belts for proper alignment	
				X			*Replace engine air filter	See engine operator's manual
				X			Grease caster wheel bearings	See Section 7.2
				X			Grease transmission couplers	See Section 7.2
				X			Check all hardware for tightness	
				X			Change engine oil	See Section 7.3
				X			*Clean air cleaner element	See Section 7.5

* Perform these maintenance procedures more frequently under extreme dusty or dirty conditions

MAINTENANCE CHART - RECOMMENDED SERVICE INTERVALS (CONT'D)

HOURS						PROCEDURE	COMMENTS
BREAK-IN (FIRST 10)	8	40	100	200	500		
				X		Check hardware for tightness	
				X		Change engine oil filter	See Section 7.3
				X		Inspect fuel lines, vapor hoses, and tank grommets after 200 hours of operation or annually.	
					X	Replace engine fuel filter	See Section 7.4
					X	Grease caster wheel pivot shafts	See Section 7.2
					X	Adjust electric PTO clutch	See Section 6.6

7.2 LUBRICATION

GREASE FITTING LUBRICATION CHART

LOCATION	LUBRICATION INTERVAL	LUBRICANT	NO. OF PLACES
1 - Caster Wheel Pivot	100 Hours / Bi-Weekly	Chassis Grease	2
2 - Caster Wheel Bearings	100 Hours/Monthly	Chassis Grease	2
3 - Cutter Deck Spindles	40 Hours / Weekly	+ US Lithium MP White Grease	2 / 3
4 - Transmission Couplers	100 Hours / Monthly	Chassis Grease	2
5 - Wheel Bearings	100 Hours / Bi-Weekly	Chassis Grease	2
6 - Idler Arm Pivot	100 Hours / Bi-Weekly	Chassis Grease	2

+ Compatible Greases: Scag Premium Chassis Grease p/n 486257
Scag Premium Spindle Grease p/n 486258

* PROCEDURE: Remove grease cap, part number 484195. Remove plug, part number 482028-01, and install grease zerk. Apply grease to the fitting until new grease appears at the top of the caster extension. Remove the grease zerk and reinstall the plug. Reinstall the grease cap. Special tool, part number 47007, is recommended for use in the installation of the grease cap.

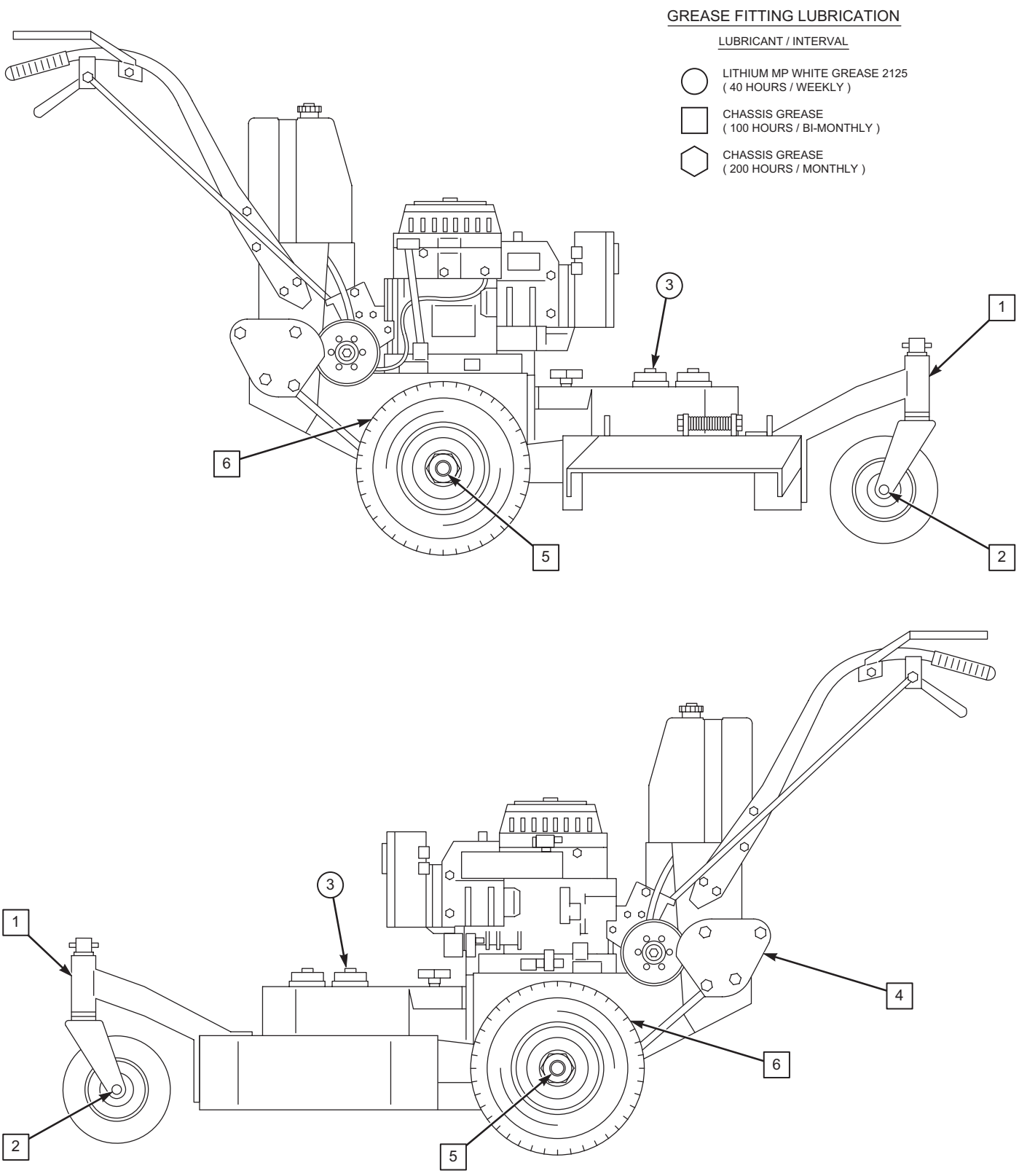

Figure 7-1. Lubrication Points

7.3 ENGINE OIL

A. CHECKING ENGINE CRANKCASE OIL LEVEL

The engine oil level should be checked after every 8 hours of operation or daily as instructed in the Engine Operator's Manual furnished with this mower.

B. CHANGING ENGINE CRANKCASE OIL

After the first 20 hours of operation, change the engine crankcase oil and replace the oil filter. Thereafter, change the engine crankcase oil after every 100 hours of operation or bi-weekly, whichever occurs first. Refer to the Engine Operator's Manual furnished with this mower for instructions.

C. CHANGING ENGINE OIL FILTER

After the first 20 hours of operation, replace the engine oil filter. Thereafter, replace the oil filter after every 200 hours of operation or every month, whichever occurs first. Refer to Engine Operator's Manual for instructions.

7.4 ENGINE FUEL SYSTEM

⚠ DANGER

To avoid injury from burns, allow the mower to cool before removing the fuel tank cap and refueling.

A. FILLING THE FUEL TANK

Fill the fuel tank at the beginning of each operating day. Fill to the bottom of the filler neck insert (approximately 5-1/2 gallons indicating Full (F) on the fuel gauge) at the beginning of each operating day. See Figure 7-2. Do not overfill. Use clean, fresh unleaded gasoline with a minimum octane rating of 87 and a maximum of 10% Ethanol.

DO NOT use E85 Fuel. Using E85 Fuel will cause severe damage to the engine.

DO NOT over fill. The empty space in the fuel tank allows the fuel to expand. Overfilling the fuel tank may result in fuel leakage, damage to the engine and/or damage to the machine's emissions system.

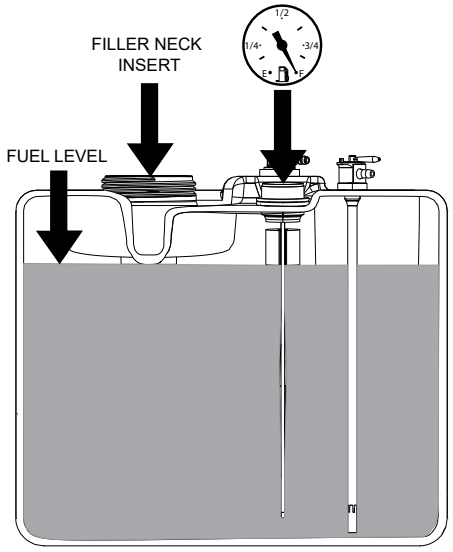

Figure 7-2. Fuel Level

To avoid personal injury or property damage, use extreme care in handling gasoline. Gasoline is extremely flammable and the vapors are explosive.

1. Extinguish all cigarettes, cigars, pipes and other sources of ignition.
2. Use only an approved gasoline container.
3. Never remove the gas cap or add fuel with the engine running. Allow the engine to completely cool before fueling.
4. Never fuel the machine indoors or in an enclosed trailer.
5. Never store the machine or fuel container where there is an open flame, spark or pilot light such as on a water heater or other appliances.
6. Never fill containers inside a vehicle or on a truck or trailer bed with a plastic liner. Always place containers on the ground away from your vehicle before filling.
7. Remove the machine from the truck or trailer and fuel on level ground. If this is not possible, then refuel the machine with a portable container, rather than from a gasoline dispenser nozzle.
8. Keep the nozzle in contact with the rim of fuel tank or container opening at all times until fueling is complete. Do not use a nozzle lock-open device.
9. If fuel is spilled on clothing, change clothing immediately and wash affected skin.

10. DO NOT start the engine until any spilled fuel has been cleaned up or has evaporated.
11. Replace gas cap and tighten securely. For Low Emission (LE) and EPA Phase 3 (produced after 1/1/2011) models, tighten the fuel cap until it ratchets.

B. REPLACING IN-LINE FUEL FILTER ELEMENTS

The engine fuel filter should be replaced after every 500 hours of operation or annually, whichever occurs first.

1. Close the shut-off valve.
2. Remove and replace the engine fuel filter. Open the fuel shut-off valve.

7.5 ENGINE AIR CLEANER

A. CLEANING AND/OR REPLACING AIR CLEANER ELEMENT

For any air cleaner, the operating environment dictates the air cleaner service periods. Inspect and clean the air cleaner element after every 100 hours of operation or bi-weekly, whichever occurs first and replace the element if required.

- NOTE -

In extremely dusty conditions it may be necessary to check the element once or twice daily to prevent engine damage.

1. Remove the air cleaner cover. Set aside.
2. Remove the air cleaner and inspect.
3. Clean or replace the air cleaner and foam pre-cleaner as recommended by the engine manufacturer.
4. Replace the air cleaner cover and secure.

7.6 CUTTER BLADES

A. BLADE INSPECTION

1. Remove the ignition key before servicing the blades.

⚠ WARNING

Always wear proper hand and eye protection when working with cutter blades.

2. Check the cutter blades for straightness. If the cutter blades appear bent, they will need to be replaced.
3. Check the cutter blades for wear. If any part of the cutter blade is worn to 1/2 its original thickness, replace the cutter blade.

⚠ WARNING

Do not attempt to straighten a bent blade, and never weld a broken or cracked blade. Always replace it with a new blade to assure safety.

4. Check the cutter blades for gouges. If there are gouges on the top or bottom surfaces of the cutter blade, replace the cutter blade.
5. If a blade cutting edge is dull or nicked, it should be sharpened. Remove the blades for sharpening. See Section 7.6C.

- NOTE -

Keep the blades sharp. Cutting with dull blades not only yields a poor mowing job, but slows the cutting speed of the mower and causes extra wear on the engine and the blade drive by pulling hard.

B. BLADE SHARPENING

- NOTE -

If possible, use a file to sharpen the blade. Using a wheel grinder may burn the blade.

- NOTE -

DO NOT sharpen the blades beyond 1/3 of the width of the blade. See Figure 7-3.

1. Sharpen the cutting edge at the same bevel as the original. See Figure 7-3. Sharpen only the top of the cutting edge to maintain sharpness.

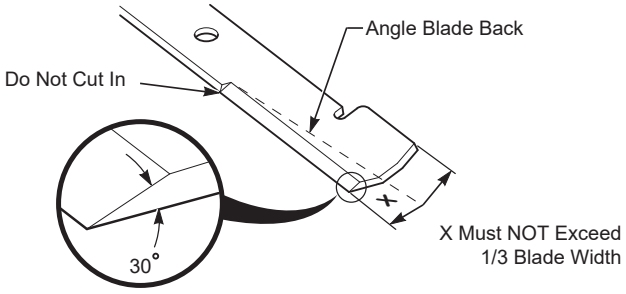

Figure 7-3. Blade Sharpening

2. Check the balance of the blade. If the blades are out of balance, vibration and premature wear can occur. The cutter blades should be balanced to 1-1/2 oz-in. See your Authorized Scag Power Equipment Dealer for blade balancing or special tools, if you choose to balance your own blades.

C. BLADE REPLACEMENT

⚠ WARNING

Always wear proper hand and eye protection when working with cutter blades.

1. Remove the ignition key before replacing the blades.
2. Remove the belt cover.
3. Secure the cutter blades to prevent them from rotating, (use the optional Blade Buddy tool P/N 9212, to assist in securing the cutter blades), remove the blade attaching bolt. Remove the cutter blade, bolt, lockwasher and flatwasher from the spindle shaft. See Figure 7-4.

- NOTE -

Be sure that the blade is installed with the lift wing towards the top of the cutter deck.

⚠ CAUTION

Inspect the cutter blade spacer(s) and washer for wear and/or cupping. Replace the worn parts. Worn spacer(s) and/or washer will not allow proper tightening of the cutter blade and can lead to cutter blade failure, personal injury or property damage.

4. Install the cutter blade on to the cutter spindle shaft. Secure the blades from rotating and torque to 75 ft/lbs. See Figure 7-4.
5. Install the belt cover.

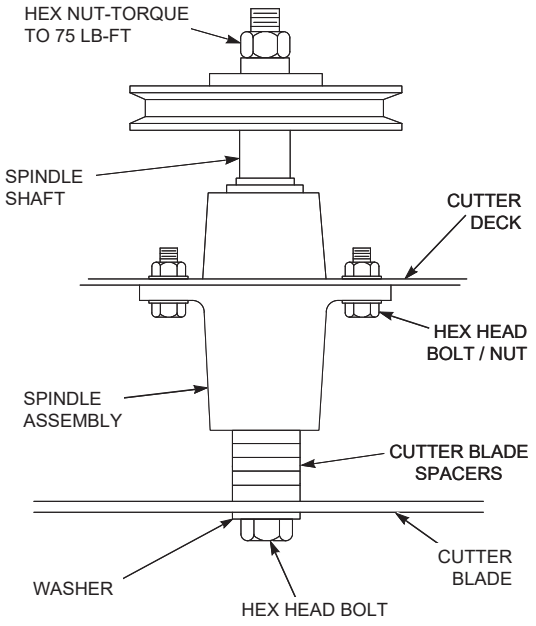

Figure 7-4. Blade Replacement

7.7 TIRES

Check the tire pressures after every 8 hours of operation or daily.

Caster Wheels	Flat-Free
Drive Wheels	12 PSI

NOTES

PAGE LEFT INTENTIONALLY BLANK

ILLUSTRATED PARTS LIST

8.1 SCAG APPROVED ATTACHMENTS AND ACCESSORIES.

Attachments and accessories manufactured by companies other than Scag Power Equipment are not approved for use on this machine.

Scag approved attachments and accessories:

Accessories	P/N
Grass Catchers	
GC-F4 (fabric grass catcher)	926Z
Mulching Accessories	
Mulch Plate (36)	927U
Mulch Plate (48)	927V
Mulch Plate (52)	927W
Hurricane Mulch Kit (36)	927M
Hurricane Plus Mulch Kit (48)	927E
Hurricane Plus Mulch Kit (52)	927P
Miscellaneous	
Blade Buddy	9212
Turbo Baffle (48/52)	424677

Accessories	P/N
Scag Premium Lubricants	
Chassis Grease	486257
Spindle Grease	486258
Hydraulic System Oil (1 gal)	486254
Hydraulic System Oil (1 qt)	486255

32" & 36A CUTTER DECKS

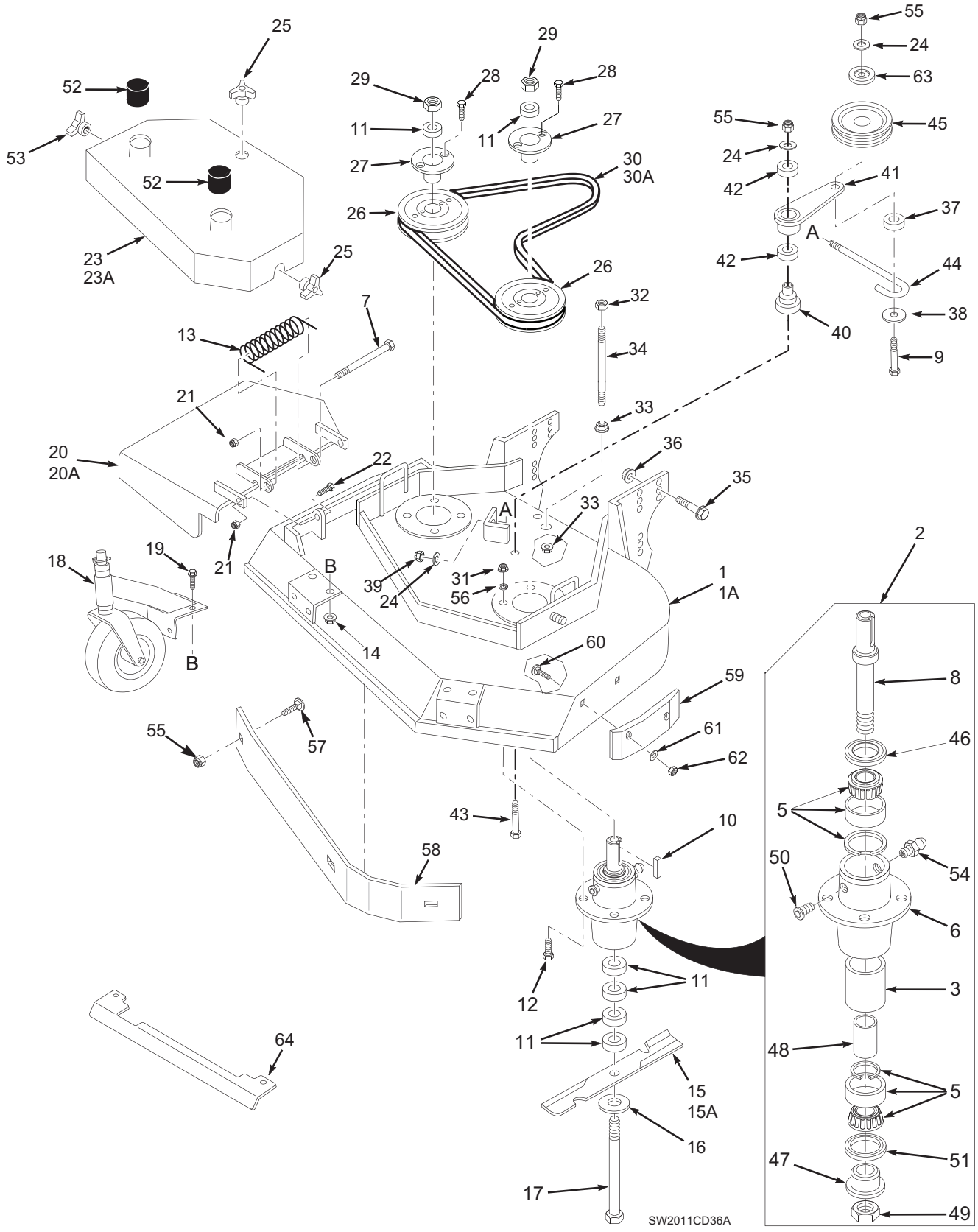

32" & 36A CUTTER DECKS

Ref. No.	Part No.	Description	32	36
1	461847	Cutter Deck w/Decals	x	
1A	461848	Cutter Deck w/Decals		x
2	461663	Cutter Spindle Assembly	x	x
3	43312	Spacer, Outside	x	x
5	481022	Bearing, Tapered	x	x
6	43644	Spindle Housing	x	x
7	04001-154	Bolt, 5/16-18 x 4-3/4"	x	x
8	43589	Spindle Shaft	x	x
9	04001-51	Bolt, 3/8-16 x 3-3/4" Hex Head	x	x
10	04063-08	Key, 1/4 x 1/4 x 2"	x	x
11	43592	Spacer, Cutter Blade - Small	x	x
12	04001-175	Bolt, 5/16-18 x 1-1/2" Hex Head Grade 8	x	x
13	482245	Spring, Chute Return	x	x
14	04019-03	Nut 5/16-18 Serrated Flange	x	x
15	481706	Cutter Blade, 16-1/2"	x	
	481707	Cutter Blade, 18"		x
15A	481710	Cutter Blade 16-1/2 Hi-Lift	x	
	481711	Cutter Blade, 18 Hi-Lift		x
16	04043-06	Flatwasher, 5/8 W	x	x
17	04001-41	Hex Hd. Bolt, 5/8-11 x 9-1/2"	x	x
18	461023	Caster Assembly	x	x
19	04017-16	Cpscrw,5/16-18 x 3/4" Ser. Flg. Hex Head	x	x
20	461355	Discharge Chute	x	
20A	461356	Discharge Chute		x
	*462469	CA Discharge Chute		x
	*425872	Turbo Baffle		x
21	04021-10	Hex Nut, 5/16-18 Elastic Stop	x	x
22	04001-09	Hex Hd Bolt, 5/16-18 x 1"	x	x
23	462392	Belt Cover Assy (Incl. Decal)	x	
23A	462393	Belt Cover Assy (Incl. Decal)		x
24	04043-04	Flat Washer, 3/8" Special	x	x
25	04029-03	Wing Nut, 3/8-16	x	x
26	482744	Pulley	x	x
27	48926	Tapered Hub	x	x
28	04001-172	Hex Hd. Bolt, 1/4-20 x 1"	x	x
29	04020-09	Hex Nut, 5/8-11	x	x
30	48278	Belt, Blade Drive	x	
30A	48204	Belt, Blade Drive		x
31	04021-22	Elastic Stop Nut, 5/16-18 Grade 8	x	x
32	04021-05	Hex Nut, 3/8-16 Center Locknut	x	x
33	04019-04	Nut, 3/8-16 Serrated Flange	x	x
34	04004-02	Support, Belt Cover	x	x
35	04017-37	Cpscrw, 1/2-13 x 1-1/4" Ser. Flg. HH	x	x
36	04117-04	Nut, 1/2-13 Flange El. Stop	x	x
37	43277	Spacer, J-Hook	x	x
38	04041-12	Flatwasher, 3/8 x 1-1/2 x 16 GA	x	x
39	04021-09	Elastic Stop Nut, 3/8-16	x	x
40	43681	Idler Pivot	x	x
41	461841	Idler Arm Assy. (Inc. 42)	x	x
42	48224	Bearing	x	x
43	04001-62	Cpscrw, 3/8-16 x 3-1/4" Hex Head	x	x
44	44078	J-Hook	x	x
45	483215	Idler Pulley, Belt Clutch	x	x
46	481024	Seal, Cutter Spindle	x	x
47	43297	Spindle Bushing	x	x
48	43296	Spacer, Inside	x	x
49	481035	Nut,1.06-18	x	x
50	48677	Relief Fitting, Cutter Spindle	x	x
51	481025	Seal, Cutter Spindle	x	x
52	484368	Spindle Shield	x	x
53	04029-04	Wing Nut, 3/8-16 (Small) RH side	x	x
54	48114-04	Grease Fitting	x	x
55	04021-09	Nut, Hex Elastic Stop 3/8-16	x	x
56	04030-03	Lock Washer, 5/16"	x	x
57	04003-23	Bolt, Carriage 3/8-16 x 1"	x	x
58	423783	Baffle Weldment		x
59	483174	Pad, Deck Wear	x	x
60	04003-12	Bolt, Carriage 5/16-18 x 3/4"	x	x
61	04040-04	Flatwasher, 5/16"	x	x
62	04021-04	Hex Nut, 5/16-18 Center Locknut	x	x
63	424367	Dust Shield	x	x
64	424661	Heatshield	x	x

* = California Models Only (not shown)

48V & 52V CUTTER DECKS

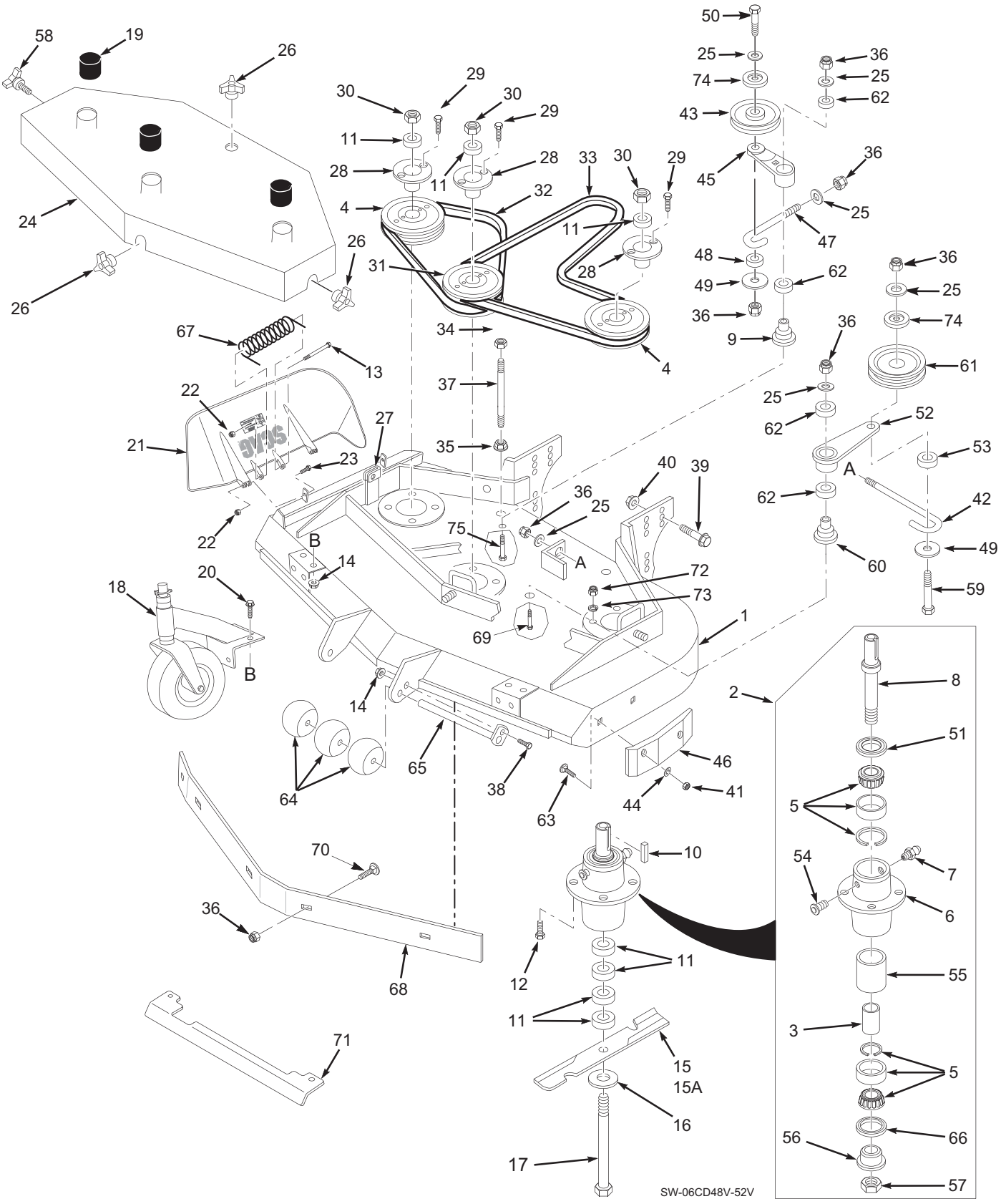

48V & 52V CUTTER DECKS

Ref. No.	Part No.	Description	48	52
1	461852	Cutter Deck w/Decals	x	
	461855	Cutter Deck w/Decals		x
2	461663	Spindle Assembly	x	x
3	43296	Spacer, Inside	x	x
4	482744	Pulley	x	x
5	481022	Tapered Bearing	x	x
6	43644	Spindle Housing	x	x
7	48114-04	Grease Fitting Str. 5/16"	x	x
8	43589	Spindle Shaft	x	x
9	43682	Idler Pivot	x	x
10	04063-08	Key, 1/4 x 1/4 x 2"	x	x
11	43592	Spacer, Cutter Blade - Small	x	x
12	04001-175	Bolt, 5/16-18 x 1-1/2" Hex Head Gr. 8	x	x
13	04001-154	Bolt, 5/16-18 x 4-3/4" Hex Head	x	x
14	04019-03	Serr. Flange Nut, 5/16-18	x	x
15	481706	Cutter Blade 16-1/2"	x	
	481707	Cutter Blade 18"		x
15A	481710	Cutter Blade 16-1/2 Hi-Lift	x	
	481711	Cutter Blade 18 Hi-Lift		x
16	04043-06	Flatwasher,5/8" (.688 x 1.75 x .134)	x	x
17	04001-41	Hex Head Bolt, 5/8-11 x 9-1/2"	x	x
18	461023	Caster Assembly	x	x
19	484368	Cap, Spindle	x	x
20	04017-16	Capscrew, 5/16-18 x 3/4"	x	x
21	461844	Discharge Chute 48V	x	
	*462473	CA Discharge Chute, 48V	x	
	*425619	Turbo Baffle, 48V	x	
	461845	Discharge Chute 52V		x
	*462475	CA Discharge Chute, 52V		x
	*424211	Turbo Baffle, 52V		x
22	04021-10	Nut, 5/16-18 Elastic Elastic Stop	x	x
23	04001-11	Bolt, 5/16-18 x 1-1/2" Hex Head	x	x
24	462394	Belt Cover (Incl. decals)	x	
	462395	Belt Cover (Incl. decals)	x	x
25	04043-04	Flat Washer, 3/8" Special	x	x
26	04029-03	Wing Nut, 3/8-16 (Large)	x	x
27	04110-03	U-Nut, 3/8-16	x	x
28	48926	Tapered Hub		x
29	04001-172	Bolt, 1/4-20 x 1" Hex Head Grade 8	x	x
30	04020-09	Nut, 5/8-11 Hex	x	x
31	482748	Pulley, Double		x
32	48087	Belt, RH Blade Drive	x	
	48285	Belt, RH Blade Drive		x
33	48089	Belt, Blade Drive	x	
	483518	Belt, Blade Drive		x
34	04021-05	Nut, 3/8-16, Nut Centerlock	x	x
35	04019-04	Nut, 3/8-16, Serrated Flange	x	x
36	04021-09	Nut, 3/8-16 Elastic Stop	x	x
37	04004-02	Bolt, 5/16-18 x 1" Hex Head	x	x
38	04001-09	Bolt, 5/16-18 x 1" Hex Head		x
39	04017-37	Cpscrw, 1/2-13 x 1-1/4" Ser. Flg. HH	x	x
40	04117-04	Nut, 1/2-13 Flange El. Stop	x	x
41	04021-04	Hex Nut, 5/16-18 Center Locknut	x	x

Ref. No.	Part No.	Description	48	52
42	44078	J-Hook, 48V	x	
	43028	J-Hook, 52V		x
43	48181	Idler Pulley, “V” Groove	x	x
44	04040-04	Flatwasher, 5/16"	x	x
45	461091	Idler Arm Assy. (Incl. 62)	x	x
46	483176	Pad, Deck Wear	x	x
47	43028	J-Rod, Idler Pulley	x	x
48	43077	Spacer, J-Rod	x	x
49	04041-12	Washer, 3/8 x 1-1/2 x 16 ga.	x	x
50	04001-31	Bolt, 3/8-16 x 2-1/2" Hex Head	x	x
51	481024	Seal, Cutter Spindle	x	x
52	461841	Idler Arm Assy (Includes 62)	x	x
53	43277	Spacer, J-Rod	x	x
54	48677	Reiief Fitting, Cutter Spindle	x	x
55	43312	Spacer, Outside, Cutter Spindle	x	x
56	43297	Spindle Bushing	x	x
57	481035	Nut, Cutter Spindle	x	x
58	481625-01	Knob, w/stud	x	x
59	04001-51	Bolt, 3/8-16 x 3-3/4" Hex Head	x	x
60	43681	Idler Pivot	x	x
61	483215	Idler Pulley, Belt Clutch	x	x
62	48224	Bearing	x	x
63	04003-12	Bolt, Carriage 5/16-18 x 3/4"	x	x
64	482295	Guide Roller	x	x
65	45944	Roller Shaft	x	x
66	481025	Seal, Cutter Spindle	x	x
67	483378	Spring, Chute Return	x	x
68	424839	Baffle Weldment 48V	x	
	424840	Baffle Weldment 52V		x
69	04001-62	Bolt, 3/8-16 x 3-1/4" Hex Head	x	x
70	04003-23	Bolt, Carriage 3/8-16 x 1"	x	x
71	424661	Heatshield	x	x
72	04021-22	Nut, Hex Lock 5/16-18	x	x
73	04030-03	Lock Washer 5/16"	x	x
74	424367	Dust Shield	x	x
75	04001-22	Bolt, 3/8-16 x 2-3/4" Hex Head	x	x

* = California Models Only (not shown)

CASTER ASSEMBLY

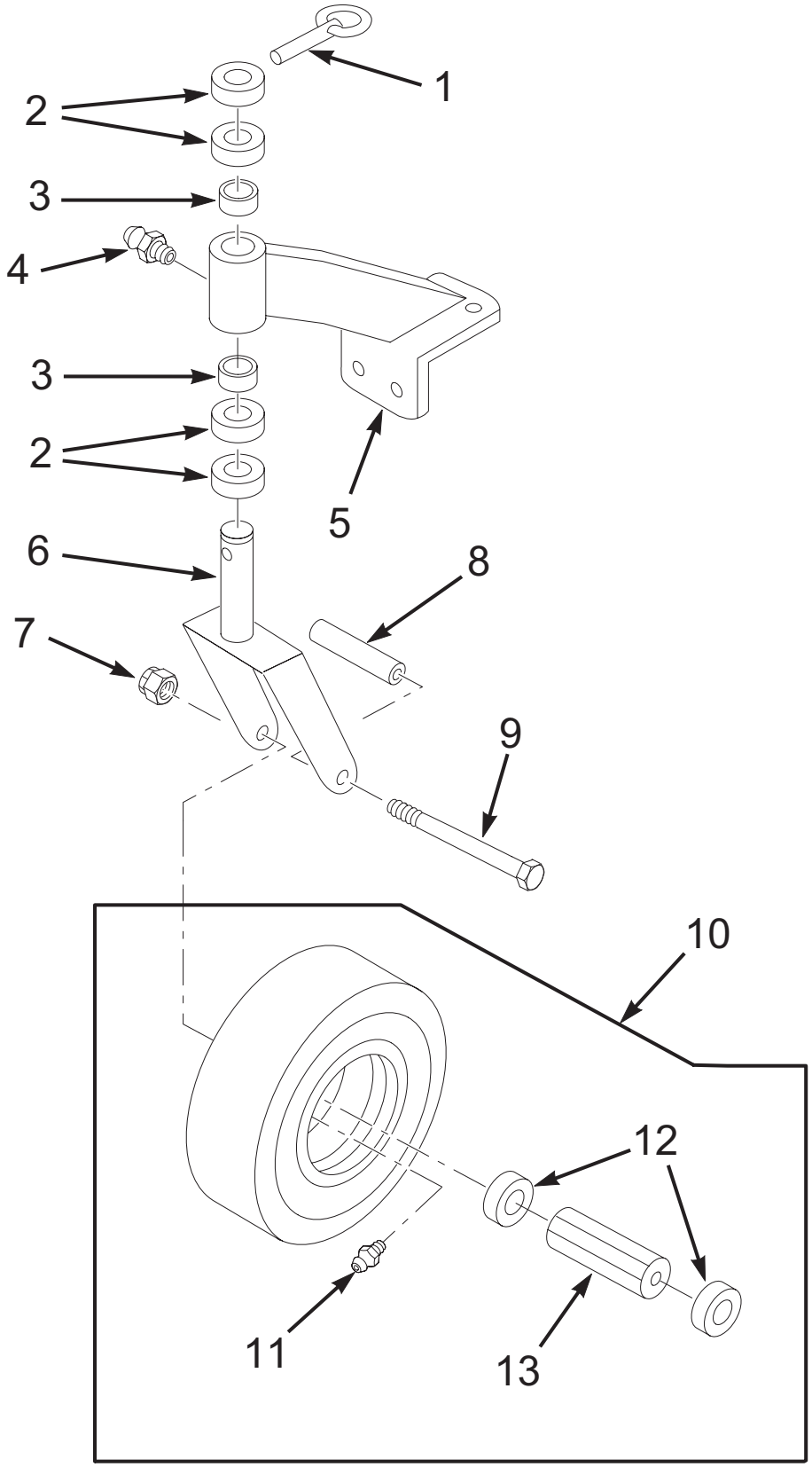

CASTER ASSEMBLY

Ref. No.	Part No.	Description
1	04066-01	Quick Pin
2	43037-01	Spacer, Spacer Yoke, 1/2" Long
3	48100-01	Bronze Bearing
4	48114-04	Greasing Fitting
5	45101	Support Assembly
6	45006	Caster Yoke
7	04021-07	Nut, Elastic Stop 1/2-13
8	43022	Sleeve, Caster Wheel Bearing
9	04001-37	Bolt, Hex Head 1/2-13 x 5-1/2"
10	483047	Caster Wheel Assy. (Incl. #11, #12, #13)
11	48114-03	Grease Fitting, 45 Degree 1/4-28
12	481770	Retainer, Caster Wheel Bearing
13	481769	Roller Bearing, Caster Wheel

ENGINE DECK

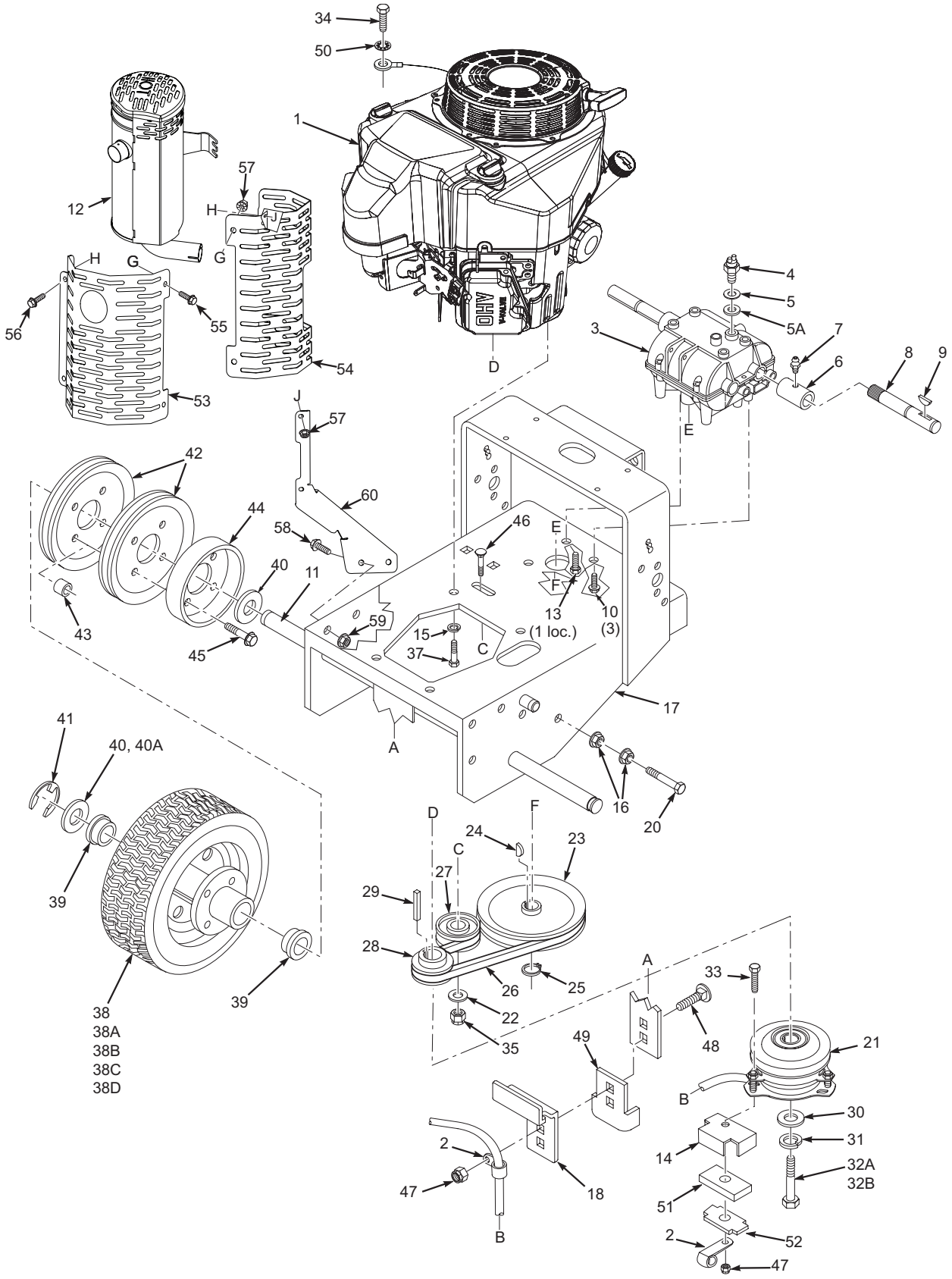
34
50
1
12
57
H
J
G
H
G
56
55
54
53
D
4
5
5A
3
7
6
8
9
E
J
57
42
60
44
58
46
E
40
11
F
13
(1 loc.)
10
(3)
43
59
15
C
37
45
17
A
41
40, 40A
16
20
D
F
24
23
C
27
29
28
26
25
A
33
22
35
48
49
21
B
30
31
14
32A
32B
2
47
18
51
B
2
52
47
39
39
38
38A
38B
38C
38D

ENGINE DECK

Ref. No.	Part No.	Description
1	*	Engine, Kawasaki 14FS (FS481V-FS18)
	*	Engine, Kawasaki 15FS (FS541V-FS19)
2	48030-09	Cable Clamp
3	481580	Transmission, 5-speed (Peerless 700-070, 9 tooth spline)
4	48231	Neutral Safety Switch
5	48122-01	Fibre Washer, thin
5A	48122-02	Fibre Washer, thick
6	481581	Coupler, Jackshaft
7	48114-05	Grease Fitting, straight 1/4-28
8	481582	Jackshaft (fits SW32,36,48& 52)
9	04063-09	Key, Hi-Pro #9
10	04017-16	Bolt, 5/16-18 X 3/4" Hex Head
11	43085**	Wheel Axle (SW36,48 & 52)
	43104**	Wheel Axle (SW 32)
12	484620	Muffler - Kawasaki
13	04001-08	Bolt, 5/16-18 X 3/4" Hex Head
14	422533	Backing Plate
15	04030-04	Lock Wshr. 3/8"
16	04019-04	Nut, 3/8-16 Serrated Flange
17	462285	Engine Deck (fits SW32)
	462286	Engine Deck (fits SW36,48 & 52)
18	424620	Plate, Clutch Bracket
19	04019-03	Nut, 5/16-18 Serrated Flange
20	04001-51	Bolt, 3/8-16 x 3-3/4" Hex Head
21	461397	Electric Clutch (Ogura)
22	04041-07	Washer, 3/8" (.391 x .938 x .105)
23	48197	Pulley, Transmission Input
24	04063-07	Key, Woodruff #9
25	04050-09	Retaining Ring, 5/8" Ext, Basic
26	48203	Belt, Transmission Drive
27	483208	Idler Pulley, Transmission
28	481666	Pulley, Traction Drive
29	04063-19	Key, 1/4 x 1/4 x 3/4"
30	04041-28	Flat Washer, 7/16" Special
31	04030-05	Lock Washer, 7/16"
32A	04102-04	Bolt, 7/16-20 x 2-1/2" Hex Head
32B	04103-03	Cpsrw, M10-1.5 x55 Metric Hex Hd

Ref. No.	Part No.	Description
33	04001-12	Bolt, 5/16-18 x 1-3/4" Hex Head
34	04002-06	Bolt, M8-1.25 x 16
35	04021-09	Nut, 3/8-16 Elastic Stop
36	04040-15	Flat Washer, 5/16"
37	040001-32	Bolt, Hex Head 3/8-16 x 1-1/4"
38	48192	Wheel Assembly (incl. 38A-38B) (fits SW36,48,52)
	48253	Wheel Assembly (Incl. 38C - 38D) (SW32)
38A	481860	Tire, 13 x 6.50-6, 2-ply (fits SW36,48,52)
38B	481859	Rim & Bearing Assembly (incl. 39)
38C	481861	Tire, 13 x 5.00-6 2-ply (SW32 only)
38D	481862	Rim Assembly (incl. 39) (SW32 only)
39	481858	Wheel Bearing
40	04042-05	Washer, 1-1/16 x 1-3/4 x 12 ga
40A	04041-14	Washer, 1-1/16 x 1-1/2 x 18 ga
41	04050-08	Retaining Ring, 1" Ext.- "E"
42	48200	Pulley, Wheel Drive
43	43088	Spacer, Wheel Pulley
44	48209	Brake Drum
45	04017-19	Bolt, 5/16-18 x 1-1/2" Serrated Flange
46	04003-03	Bolt, 3/8-16 x 2" Carriage
47	04021-10	Nut, 5/16-18 Elastic Stop
48	04003-04	Bolt, 5/16-18 x 1" Carriage
49	421370	Anti Rotation Bracket
50	04031-03	Lock Washer External Tooth
51	481716	Rubber Pad, Clutch Stop
52	422534	Plate, Backing
53	4201134	Shield, Muffler Outter
54	4201133	Shield, Muffler Inner
55	04001-07	Bolt, 5/16-18 x .5" Hex Head
56	04001-08	Bolt, 5/16-18 x .75" Hex Head
57	04117-01	Lknut, 5/16-18 Elastic Stop w/Flange
58	04017-37	Bolt, 1/2-13 x 1.25" Serrated Flange HH
59	04117-04	Lknut, 1/2-13 Elastic Stop w/Flange
60	453755	Brkt, Muffler Guard Mtg.

* Available through engine manufacturer
** = Requires welding onto chassis.

HANDLE ASSEMBLY

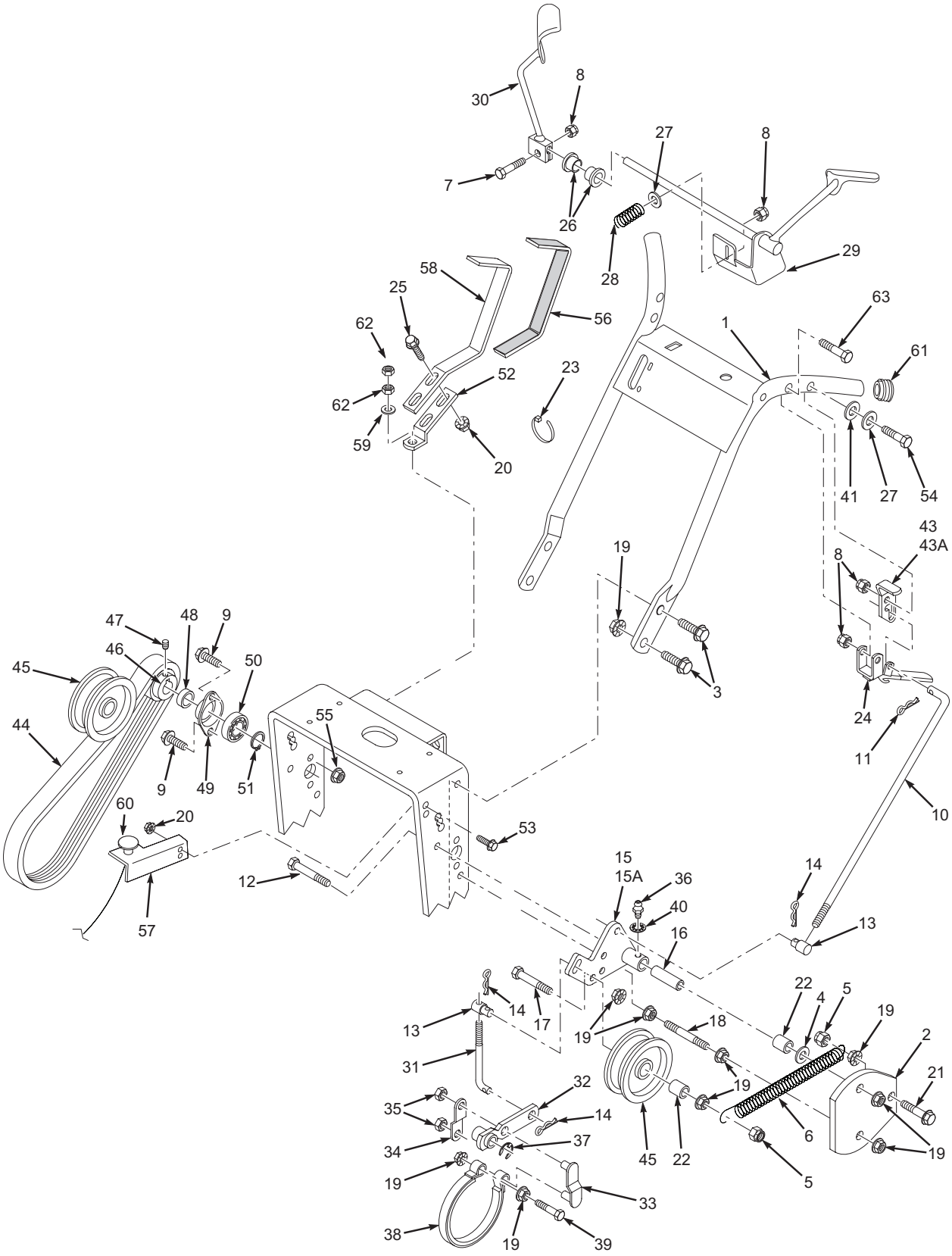

HANDLE ASSEMBLY

Ref. No.	Part No.	Description
1	463097	Handle Assembly
2	421360	Belt Guard
3	04017-27	Capscrw, 3/8-16 x 1" Serr. Flg.
4	04041-07	Washer, 3/8" (.391 x .938 x .105)
5	04021-09	Nut, 3/8-16 Elastic Stop
6	48755	Spring, Idler
7	04001-10	Bolt, 5/16-18 x 1-1/4" Hex Head
8	04021-10	Nut, 5/16-18 Elastic Stop
9	04017-05	Capscrew, 1/4-20 x 3/4" Hex Head
10	44140	Control Rod, Steering
11	04062-02	Hair Pin, Small
12	04001-23	Bolt, 3/8-16 x 4-1/2" Hex Head
13	43032	Swivel Joint
14	04062-01	Hair Pin, Large .094 Dia.
15	45847	Idler Bracket, RH
15A	45846	Idler Bracket, LH
16	43092	Idler Sleeve
17	04001-62	Bolt, 3/8-16 x 3/4" Hex Head
18	04004-17	Stud, 3/8-16 x 5"
19	04019-04	Nut, 3/8-16 Serrated Flange
20	04019-03	Nut, 5/16-18 Serrated Flange
21	04017-28	Cpscrw, 3/16-18 x 1-1/4" Serr. Flg
22	43286	Spacer
23	48028-05	Cable Tie
24	483160	Steering Lever
25	04017-17	Capscrew, 5/16-18 x 1" Serr. Flg.
26	483142	Bushing
27	04040-15	Washer, 5/16 (.375 x .875 x .083)
28	483040	Spring, Operator Presence
29	451915	Operator Presence Lever, LH
30	451917	Operator Presence Lever, RH
31	44005	Brake Rod
32	45092	Brake Lever
33	45093	Brake Link
34	42254	Brake Link Plate
35	04024-01	Nut, 3/8 Push-on
36	48114-05	Grease Fitting, Straight 1/4-28
37	04050-01	Retaining Ring, 5/8 Ext. "E"
38	48210	Brake Band
39	04001-45	Bolt, 3/8-16 x 2" Hex Head
40	04031-08	1/4" Internal Tooth Lockwasher
41	04032-01	Socket Head Capscrew #8-32 x 1/2"
42	04015-13	Socket Head Capscrew #8-32 x 1/2"
43	422880	Neutral Latch, RH
43A	422879	Neutral Latch, LH
44	48202A	Belt, Wheel Drive
45	483211	Idler Pulley, Wheel Drive

Ref. No.	Part No.	Description
46	482645	Pulley, Jackshaft (Inc. 47)
47	04012-04	Setscrew, Hex Socket Knurl Cup Pt. 5/16-18
48	43098	Spacer, Jackshaft Pulley
49	48223	Flange, Jackshaft Bearing
50	48224	Bearing, Jackshaft
51	04050-09	Retaining Ring, 5/8 Ext. Basic
52	422279	Shift Lever
53	04017-16	Capscrew, 5/16-18 x 3/4" Serr. Flg.
54	04001-17	Bolt, 5/16-18 x 2" Hex Head
55	04019-02	Nut, 1/4-20 Serrated Flange
56	481839	Grip, Shift Handle
57	424113	Bracket, Choke Mounting
58	461163	Shift Lever Extention (incl. 56)
59	04041-07	Washer, 3/8 (.391x .938 x .105)
60	482314	Choke Control
61	483161	Plug, Handlebar
62	04020-14	Nut, 3/8-24 UNF
63	04001-53	Bolt, 5/16-18 x 2-1/2"

SW FUEL SYSTEM

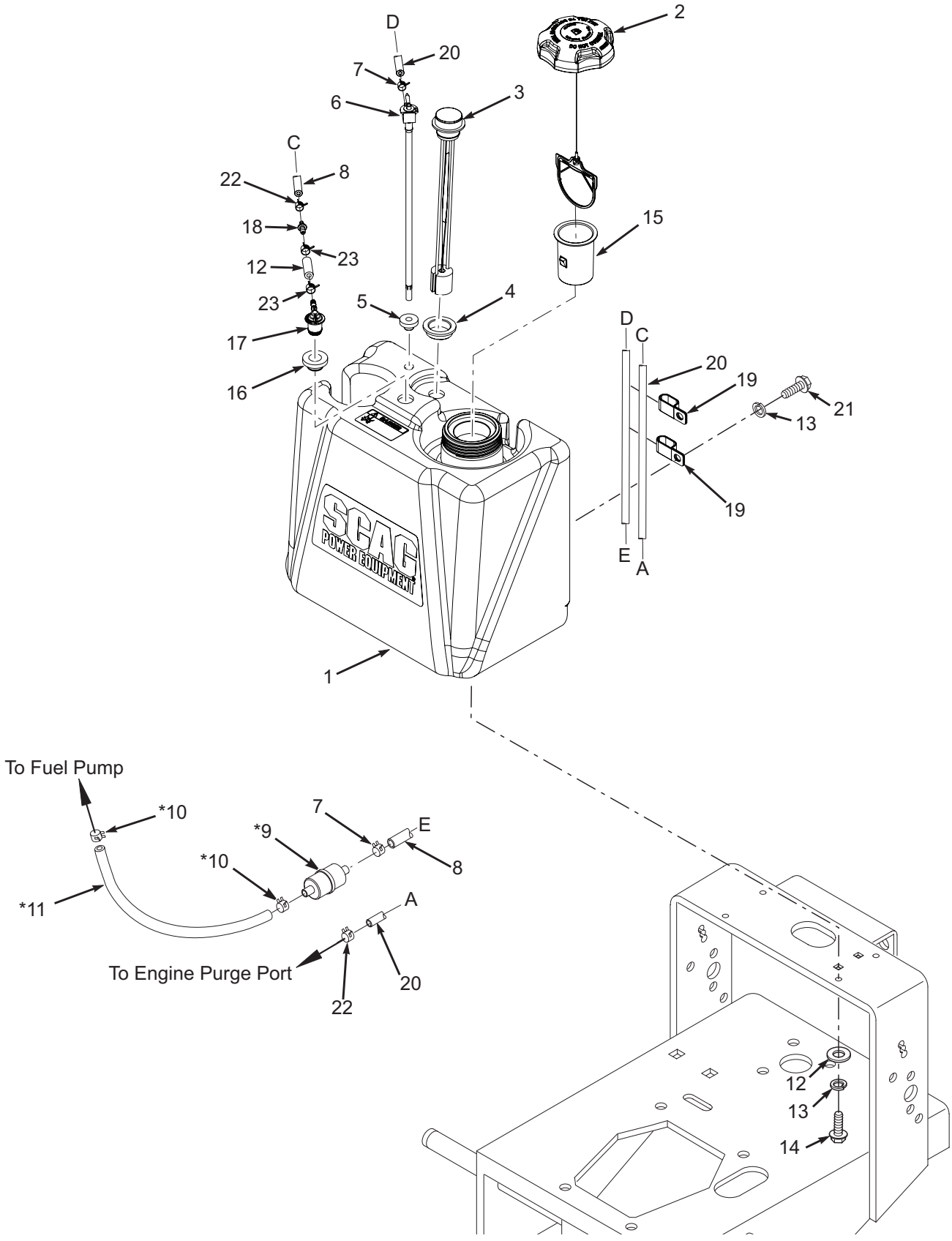

SW FUEL SYSTEM

Ref. No.	Part No.	Description
1	463283	Fuel Tank Assembly (incl. #3, 4, 5, 6, 16, 17)
2	484286	Fuel Cap w/ Tether
	484297	Fuel Cap w/Tethered - California Models Only (not shown)
3	484243	Fuel Gauge Assembly (incl. #4)
4	484242	Seal, Fuel Gauge
5	482571	Bushing, .56 Dia. Viton
6	486181	Valve, Fuel Shutoff w/Screen
7	48059-01	Clamp, Fuel Hose
8	483617	Fuel Hose, 1/4" ID (order by inch)
9	*	Fuel Filter
10	*	Clamp, Fuel Hose
11	*	Fuel Hose
12	484347	Hose, Vapor Recovery 1/4" (order by inch)
13	04030-03	Lockwasher, 5/16" Spring
14	04001-09	Bolt, Hex Head 5/16-18 x 1"
15	484279-01	Tube, Fuel Tank Insert - 4"
16	484285	Grommet, Viton,
17	484333	Fitting, Remote Vent
18	484343-01	Mender, 1/4 x 3/16 w/.02 Hole
19	48030-11	Clamp, 5/8" Double
20	484345	Hose, Vapor Recovery 3/16" (order by inch)
21	04001-08	Bolt, Hex Head 5/16-18 x 3/4"
22	48059-05	Clamp, Vapor Recovery Hose 3/16"
23	48059-02	Clamp, Fuel Hose 7/32" ID

* = Available through engine manufacturer only.

INSTRUMENT PANEL

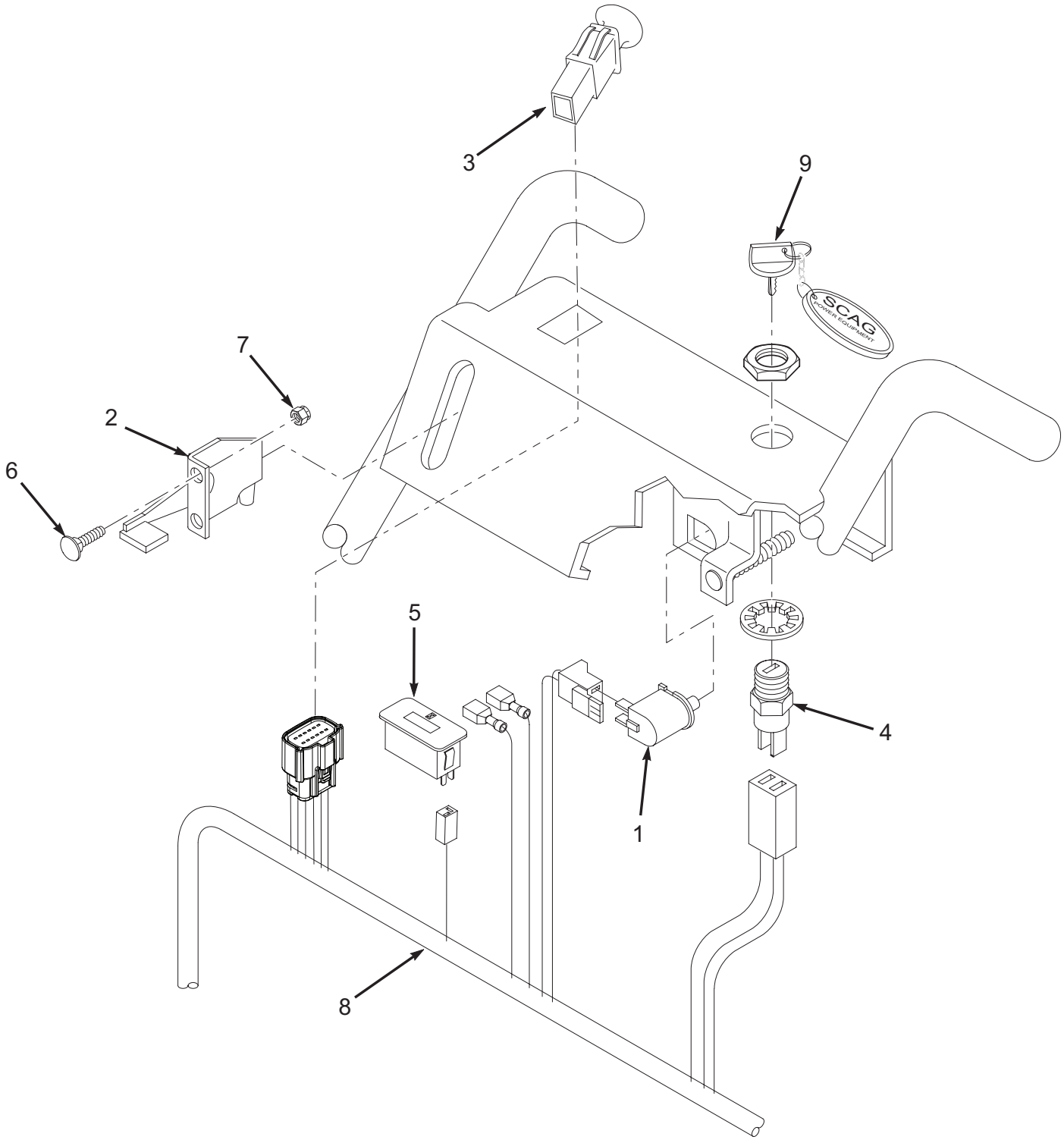

INSTRUMENT PANEL

Ref. No.	Part No.	Description
1	48717	Switch, Neutral Lock
2	48946	Throttle Control - Kawasaki
3	485833	Engagement Switch, Electric Clutch
4	48609	Key Switch
5	484565	Hour Meter
6	04003-43	Bolt, Carriage #10-32 x 1/2"
7	04021-26	Nut, #10-32 Elastic Stop
8	486118	Handle Wire Harness, Manual Start
9	462069	Key Chain w/Keys
	483609	Key w/Shroud
*	48030-09	Clamp, Wire Harness

* Not Shown

PEERLESS TRANSMISSION 700-070

FOR REFERENCE ONLY - ORDER PARTS FROM PEERLESS / TECUMSEH

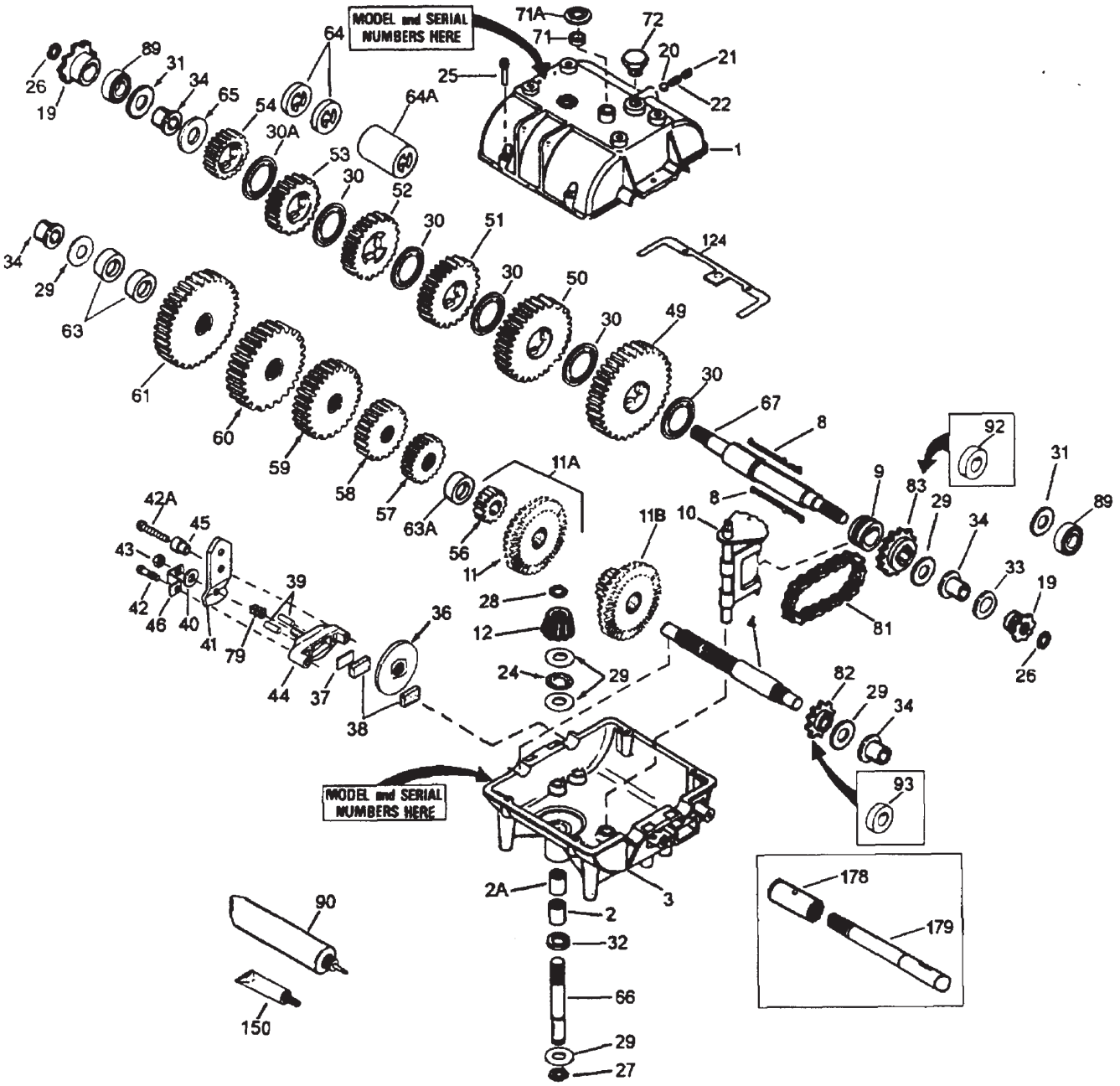

PEERLESS TRANSMISSION 700-070

FOR REFERENCE ONLY - ORDER PARTS FROM PEERLESS / TECUMSEH

Ref. No.	Part No.	Description
1	772083A	Case, Transmisson
2	780086A	Needle Bearing Grease Spec
2A	780142	Needle Bearing
3	770061A	Case, Transmission
8	792089A	Shift Key
9	784266	Shift Collar
10	784376	Shift Rod & Fork
11	778154	Bevel Gear (42 teeth)
12	778176	Bevel Pinion (14 teeth-steel)
20	792077	Steel Ball, 5/16" dia.
21	792078	Set Screw, 3/8-16 x 3/8"
22	792079	Spring
24	780071	Thrust Bearing
25	792073	Screw, 1/4-20 x 1-1/4" (6)
27	792035	Retaining Ring
28	788040	Retaining Ring
29	780072	Washer (6)
30	780108	Washer (5)
32	792001	"O" Ring
34	780105A	Flanged Bushing
49	778146A	Spur Gear (37 teeth)

REF. NO.	PART NO.	DESCRIPTION
50	778125	Spur Rear (35 teeth)
51	778239A	Spur Gear (32 teeth-steel)
52	778124A	Spur Gear (30 teeth)
53	778123A	Spur Gear (25 teeth)
56	778145	Spur Gear (12 teeth-steel)
57	778151	Spur Gear (15 teeth)
58	778240	Spur Gear (18 teeth-steel)
59	778126A	Spur Gear (20 teeth)
60	778127A	Spur Gear (25 teeth)
65	780139	Washer
66	776135	Input Shaft (3-11/16" long)
67	776402	Shifter & Brake Shaft
71	788069	Square Cut Ring
72	792074	Threaded Plug (Shipping only, not used)
81	786081	Roller Chain (No. 41 chain, 24 links)
82	786082	Sprocket (9 teeth)
83	786083	Sprocket (18 teeth)
90	788067B	Grease (32 oz. bottle Bentonite grease)
150	510334	Gasket Eliminator (Loctite #515)
178	*	Coupling (See page 26-27 for part number)
179	*	Connector Shaft (See page 26-27 for part number)

WIRE HARNESSES

ENGINE DECK
WIRE HARNESS
PART NO. 484302

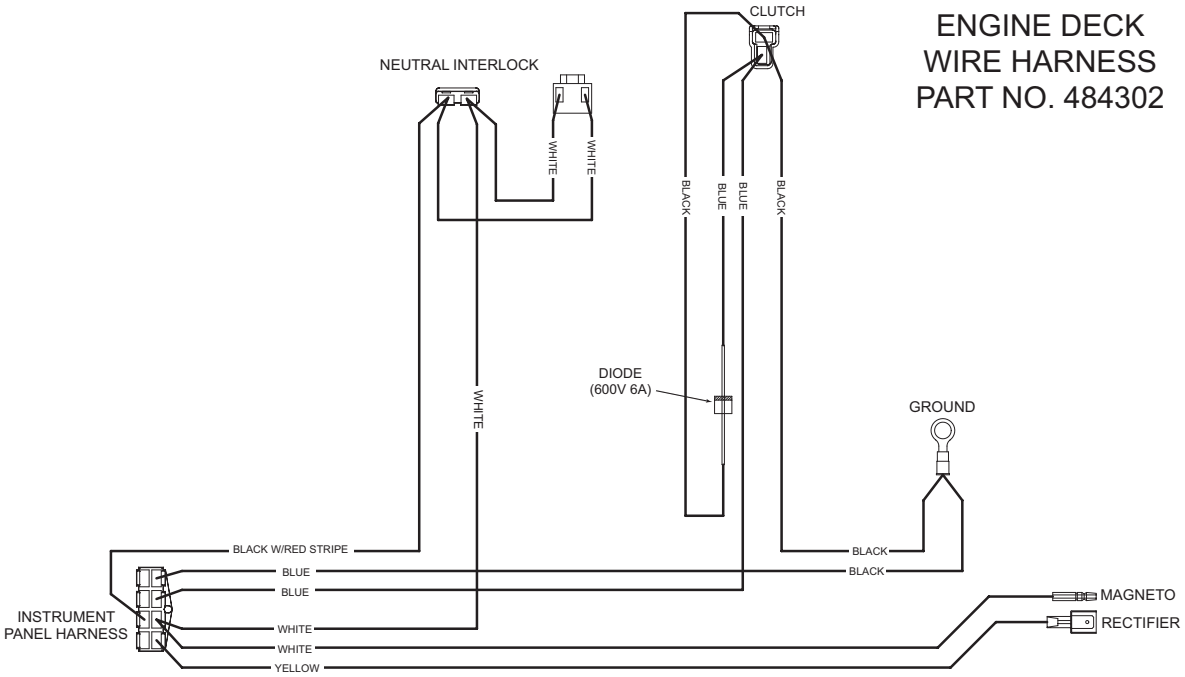

HANDLE WIRE HARNESS
Part No. 486118

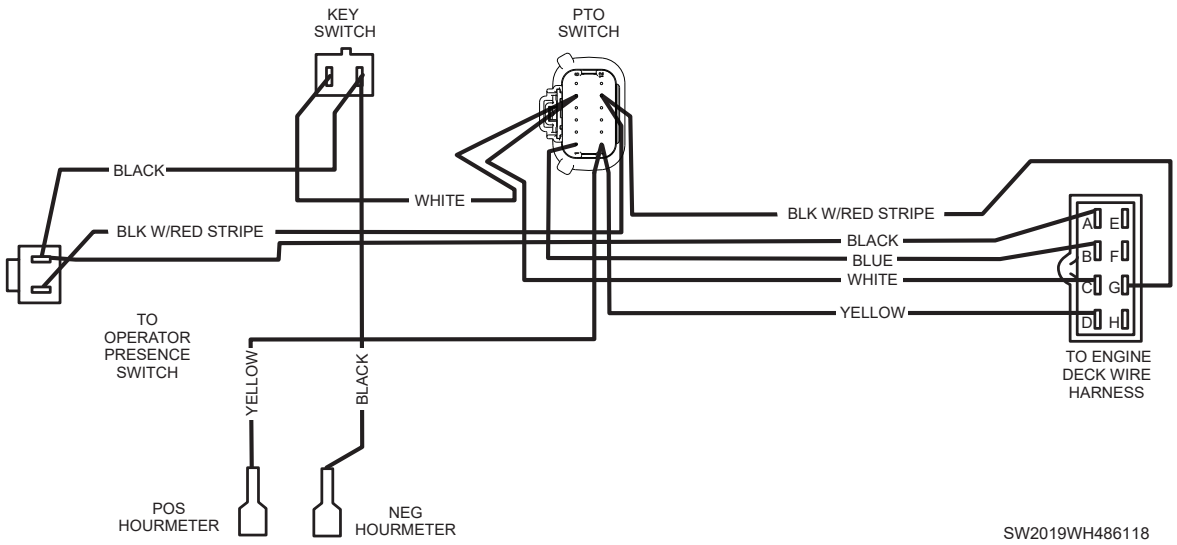

SW ELECTRICAL SCHEMATIC - RECOIL START

(shown with Key off, PTO Off, Shift Lever in Neutral, OPC Disengaged)

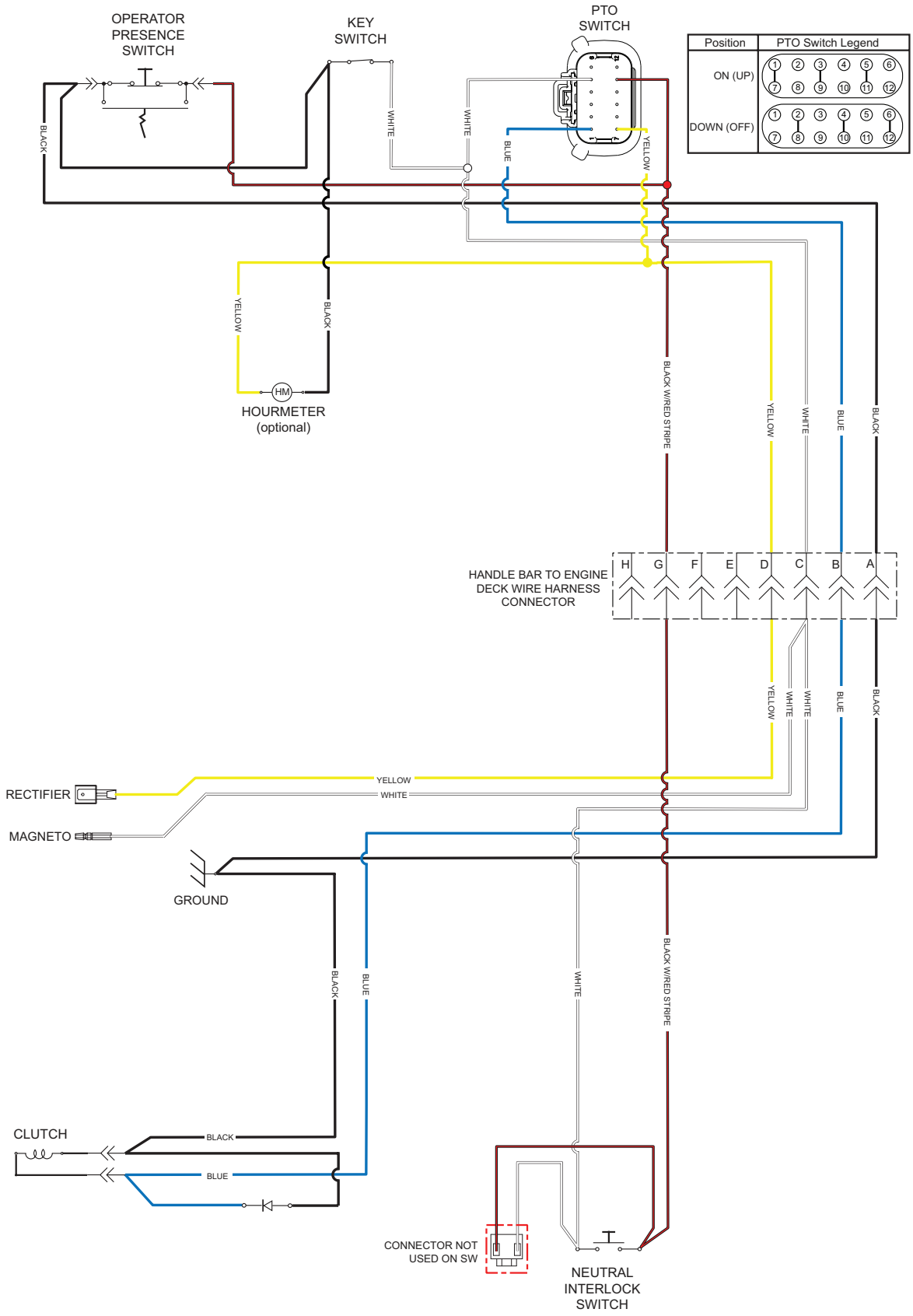

REPLACEMENT DECALS AND INFORMATION PLATES



1



2

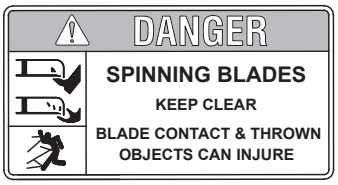

3

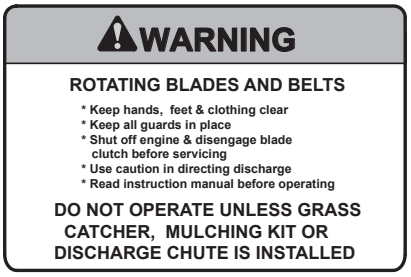

4



5



6

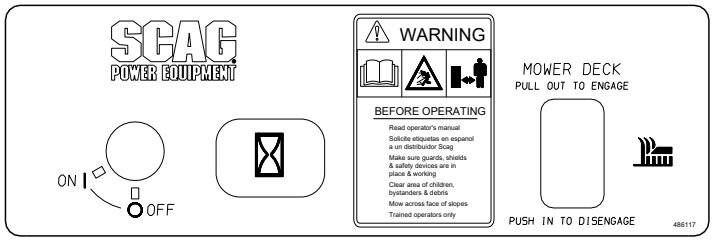

7



8

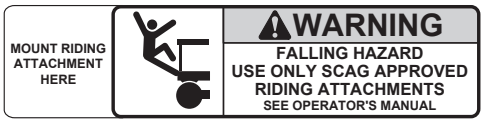

9



10

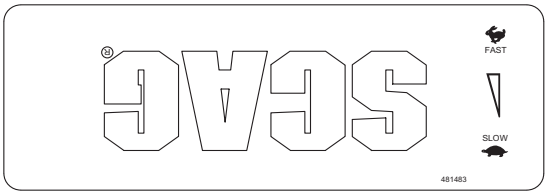

11

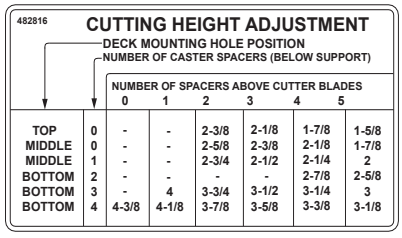

12

REPLACEMENT DECALS AND INFORMATION PLATES

Ref. No.	Part No.	Description
1	483405	Decal, Discharge Chute
2	48314	Decal, Scag Logo
3	483505	Decal, Danger-Spinning Blades
4	483406	Decal, Warning-Rotating Blades
5	481971	Decal, Heavy Duty Commercial
6	48332	Decal, Shift Index
7	486117	Decal, Instrument Panel - Rear
8	485403	Decal, Metalcraft - USA
9	483404	Decal, Sulky Attachment
10	487212	Decal, Belt Cover
11	481483	Decal, Instrument Panel - Front
12	482816	Decal, Height of Cut
13	48315	Decal, 32
	482297	Decal, 36 Advantage
14	483199	Decal, 48 Velocity Plus
	483200	Decal, 52 Velocity Plus
15	485368	Decal, SW Replacement Parts
16	485526	Decal, Belt Routing - 32 & 36A
	485527	Decal, Belt Routing - 48V & 52V
17	486136	Decal, Scag Power Equipment (Fuel Tank)
**	461986	Spanish Decal Kit, Walk-Behinds (Not Shown)
**	483900	Decal, Warning Spark Arrest (Not Shown) - California Models Only



13

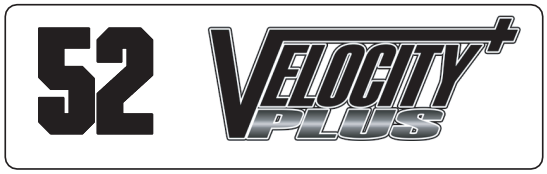

14

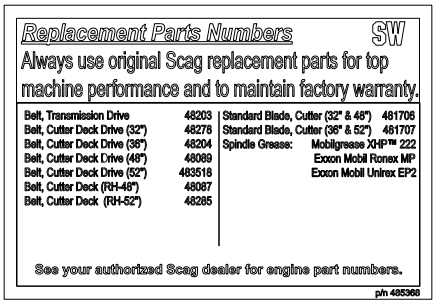

15

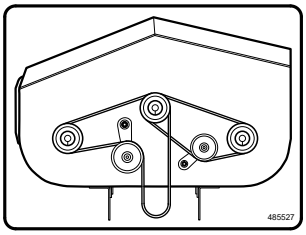

16

SCAG POWER EQUIPMENT®

17

NOTES

PAGE LEFT INTENTIONALLY BLANK

LIMITED WARRANTY - COMMERCIAL EQUIPMENT

Any part of the Scag commercial mower manufactured by Scag Power Equipment and found, in the reasonable judgment of Scag, to be defective in materials or workmanship, will be repaired or replaced by an Authorized Scag Service Dealer without charge for parts and labor during the periods specified below. This warranty is limited to the original purchaser provided the product was purchased from an Authorized Scag Power Equipment Dealer and is not transferable. Proof of purchase will be required by the dealer to substantiate any warranty claims. All warranty work must be performed by an Authorized Scag Service Dealer.

This warranty is limited to the following specified periods from the date of the original retail purchase for defects in materials or workmanship:

- Wear items including drive belts, blades, hydraulic hoses and tires are warranted for ninety (90) days.
- Batteries are covered for ninety (90) days.
- Frame and structural components including oil reservoir and oil coolers are warranted for two (2) years (parts and labor) for commercial use or three (3) years / 500 hours (whichever comes first) (parts and labor) for non-commercial use.
- Cutter decks are warranted against cracking for a period of three (3) years. (parts and labor 1st and 2nd year; parts only 3rd year.) The repair or replacement of the cutter deck will be at the option of Scag Power Equipment. We reserve the right to request components for evaluation. This warranty does not cover any mower that has been subject to misuse, neglect, negligence, or accident, or that has been operated in any way contrary to the operating instructions as specified in the Operator's Manual.
- Engines and electric starters are covered by the engine manufacturer's warranty period.
- Major drive system components are warranted for two (2) years (parts and labor) for commercial use or three (3) year / 500 hour (whichever comes first) (parts and labor) for non-commercial use by Scag Power Equipment. (commercial and non-commercial warranty excludes fittings, hoses, drive belts). The repair or replacement of the hydraulic pump or hydraulic motor will be at the option of Scag Power Equipment. This warranty does not cover any mower that has been subject to misuse, neglect, negligence, or accident, or that has been operated in any way contrary to the operating instructions as specified in the Operator's Manual.
- Electric clutches have a Limited Warranty for two (2) years (parts and labor) for commercial use or three (3) year / 500 hours (whichever comes first) (parts and labor) for non-commercial use.
- Spindle assemblies have a Limited Warranty for three years (parts and labor 1st year and 2nd; parts only 3rd year).
- Any Scag product used for rental purposes is covered by a 90 day warranty.

The Scag mower, including any defective part must be returned to an Authorized Scag Service Dealer within the warranty period. The expense of delivering the mower to the dealer for warranty work and the expense of returning it to the owner after repair will be paid for by the owner. Scag's responsibility is limited to making the required repairs and no claim of breach of warranty shall be cause for cancellation or rescission of the contract of sale of any Scag mower. "Non-Commercial" use is defined as a single property owner, where the single property is the residence of the owner of the mower. If the mower is cutting more than the owners single property, it is deemed commercial use and the "non-commercial" warranty does not apply. Scag Power Equipment reserves the right to deny and / or void the non-commercial warranty if it believes it to be in commercial use.

This warranty does not cover any mower that has been subject to misuse, neglect, negligence, or accident, or that has been operated in any way contrary to the operating instructions as specified in the Operator's Manual. The warranty does not apply to any damage to the mower that is the result of improper maintenance, or to any mower or parts that have not been assembled or installed as specified in the Operator's Manual and Assembly Manual. The warranty does not cover any mower that has been altered or modified, changing performance or durability. In addition, the warranty does not extend to repairs made necessary by normal wear, or by the use of parts or accessories which, in the reasonable judgment of Scag, are either incompatible with the Scag mower or adversely affect its operation, performance or durability.

Scag Power Equipment reserves the right to change or improve the design of any mower without assuming any obligation to modify any mower previously manufactured. All other implied warranties are limited in duration to the two (2) year for commercial use, three (3) years / 500 hour for non-commercial use or ninety (90) days for mowers used for rental purpose. Accordingly, any such implied warranties including merchantability, fitness for a particular purpose, or otherwise, are disclaimed in their entirety after the expiration of the appropriate two year, three year / 500 hour or ninety day warranty period. Scag's obligation under this warranty is strictly and exclusively limited to the repair or replacement of defective parts and Scag does not assume or authorize anyone to assume for them any other obligation. Some states do not allow limitations on how long an implied warranty lasts, so the above limitation may not apply to you.

Scag assumes no responsibility for incidental, consequential or other damages including, but not limited to, expense for gasoline, expense of delivering the mower to an Authorized Scag Service Dealer and expense of returning it to the owner, mechanic's travel time, telephone or telegram charges, rental of a like product during the time warranty repairs are being performed, travel, loss or damage to personal property, loss of revenue, loss of use of the mower, loss of time or inconvenience. Some states do not allow the exclusion or limitation of incidental or consequential damages, so the above limitation or exclusion may not apply to you. This warranty gives you specific legal rights, and you may also have other rights which vary from state to state.



Scag Power Equipment Headquarters
1000 Metalcraft Drive
Mayville, Wisconsin 53050
1.920.644.8100

Mailing Information
PO Box 152
Mayville, Wisconsin 53050

© 2027
Scag Power Equipment
Division of Metalcraft of Mayville, Inc.